NWS EHB 6−501
AF TO 31P1−4−108−4
FAA TI 6345.1 V2
NAVY EM 400−AB−IPB−010

REVISION 7

TECHNICAL MANUAL

ILLUSTRATED PARTS BREAKDOWN

DOPPLER METEOROLOGICAL RADAR WSR−88D

UNISYS CORPORATION
CONTRACT 50−DMNW−8−00032

This revision supersedes **NWS EHB 6−501** (AF TO 31P1−4−108−4; FAA TI 6345.1 V2; NAVY EM 400−AB−IPB−010) **(dated 30 MAY 2002)** and subsequent change **CHANGE 1 (dated 31 MARCH 2003)**.

Distribution Statement A − Approved for public release; distribution is unlimited.

PUBLISHED UNDER AUTHORITY OF THE SECRETARIES OF
COMMERCE, THE AIR FORCE, THE NAVY, AND TRANSPORTATION

31 OCTOBER 2003

NWS EHB 6−501
AF TO 31P1−4−108−4
FAA TI 6345.1 V2
NAVY EM 400−AB−IPB−010

REVISION 7

TECHNICAL MANUAL

ILLUSTRATED PARTS BREAKDOWN

DOPPLER METEOROLOGICAL RADAR WSR−88D

UNISYS CORPORATION
CONTRACT 50−DMNW−8−00032

This revision supersedes **NWS EHB 6−501** (AF TO 31P1−4−108−4; FAA TI 6345.1 V2; NAVY EM 400−AB−IPB−010) **(dated 30 MAY 2002)** and subsequent change **CHANGE 1 (dated 31 MARCH 2003)**.

Distribution Statement A − Approved for public release; distribution is unlimited.

PUBLISHED UNDER AUTHORITY OF THE SECRETARIES OF
COMMERCE, THE AIR FORCE, THE NAVY, AND TRANSPORTATION

31 OCTOBER 2003

LIST OF EFFECTIVE PAGES

INSERT LATEST CHANGED PAGES, DESTROY SUPERCEDED PAGES.

NOTE: The portion of the text affected by the changes is indicated by a vertical line in the outer margins of the page. Minor changes to illustrations are indicated by a miniature pointing hand. Extensive illustration changes and new illustrations do not have the miniature pointing hands.

Dates of issue for original and changed pages are:

Original . . . . . 0 . . . . . 31 OCTOBER 2003

TOTAL NUMBER OF PAGES IN THIS MANUAL IS 584 CONSISTING OF THE FOLLOWING:

Page No.	*Change No.	Page No.	*Change No.	Page No.	*Change No.
Title Page	0	2−147 − 2−151	0	2−325 − 2−335	0
A	0	2−152 blank	0	2−336 blank	0
i − iii	0	2−153	0	2−337 − 2−345	0
iv blank	0	2−154 blank	0	2−346 blank	0
1−1 − 1−7	0	2−155 − 2−159	0	2−347	0
1−8 blank	0	2−160 blank	0	2−348 blank	0
1−9	0	2−161	0	2−349 − 2−363	0
1−10 blank	0	2−162 blank	0	2−364 blank	0
2−1 − 2−17	0	2−163 − 2−207	0	2−365	0
2−18 blank	0	2−208 blank	0	2−366 blank	0
2−19	0	2−209	0	2−367	0
2−20 blank	0	2−210 blank	0	2−368 blank	0
2−21	0	2−211 − 2−259	0	2−369 − 2−391	0
2−22 blank	0	2−260 blank	0	2−392 blank	0
2−23 − 2−57	0	2−261 − 2−263	0	2−393	0
2−58 blank	0	2−264 blank	0	2−394 blank	0
2−59	0	2−265 − 2−287	0	2−395 − 2−407	0
2−60 blank	0	2−288 blank	0	2−408 blank	0
2−61 − 2−71	0	2−289	0	2−409	0
2−72 blank	0	2−290 blank	0	2−410 blank	0
2−73	0	2−291	0	2−411	0
2−74 blank	0	2−292 blank	0	2−412 blank	0
2−75	0	2−293 − 2−299	0	2−413 − 2−443	0
2−76 blank	0	2−300 blank	0	2−444 blank	0
2−77	0	2−301 − 2−305	0	2−445	0
2−78 blank	0	2−306 blank	0	2−446 blank	0
2−79 − 2−115	0	2−307	0	2−447 − 2−455	0
2−116 blank	0	2−308 blank	0	2−456 blank	0
2−117	0	2−309 − 2−317	0	2−457	0
2−118 blank	0	2−318 blank	0	2−458 blank	0
2−119 − 2−123	0	2−319	0	2−459 − 2−494	0
2−124 blank	0	2−320 blank	0	3−1 − 3−43	0
2−125 − 2−143	0	2−321	0	3−44 blank	0
2−144 blank	0	2−322 blank	0	4−1 − 4−29	0
2−145	0	2−323	0	4−30 blank	0
2−146 blank	0	2−324 blank	0		

* Zero in this column indicates an original page.

TABLE OF CONTENTS

Paragraph	Title	Page
I	INTRODUCTION	1 − 1
1−1.1	GENERAL	1 − 1
1−1.2	INTENDED USE	1 − 1
1−1.3	ARRANGEMENT	1 − 1
1−1.3.1	Section II − Maintenance Parts List	1 − 1
1−1.3.1.1	Figure and Index Number Column	1 − 1
1−1.3.1.2	Reference Designation Column	1 − 1
1−1.3.1.3	Part Number Column	1 − 1
1−1.3.1.4	Indentation Column	1 − 2
1−1.3.1.5	Description Column	1 − 2
1−1.3.1.6	Attaching Parts	1 − 2
1−1.3.1.7	CAGE Code Column	1 − 2
1−1.3.1.8	No CAGE in H4/H8	1 − 2
1−1.3.1.9	Quantity Per Assembly Column	1 − 2
1−1.3.1.10	Source, Maintenance, and Recoverability (SMR) Code Column	1 − 2
1−1.3.1.11	Usable On Code Column	1 − 2
1−1.3.1.12	Usable On Code	1 − 2
1−1.3.2	Section III − Numerical Index	1 − 2
1−1.3.3	Section IV − Reference Designation Index	1 − 2
1−1.4	HOW TO USE THIS IPB	1 − 3
1−1.5	CONSOLIDATED LOGISTICS SYSTEM UNIVERSAL RESOURCE LOCATOR (CLS URL)	1 − 7
II	MAINTENANCE PARTS LIST	2 − 1
III	NUMERICAL INDEX	3 − 1
IV	REFERENCE DESIGNATION INDEX	4 − 1

LIST OF ILLUSTRATIONS

Figure		Page
FIGURE 1−1.	SMR Coding Matrix	1 − 4
FIGURE 1−2.	Doppler Meteorological Radar WSR−88D	1 − 9
FIGURE 1.	Radar Data Acquisition Group (3 Sheets)	2 − 1
FIGURE 2.	Electrical Equipment Shelter, UD1 (8 Sheets)	2 − 17
FIGURE 3.	Antenna/Pedestal, UD2 (3 Sheets)	2 − 57
FIGURE 4.	Pedestal Assembly, UD2A1 (4 Sheets)	2 − 71
FIGURE 5.	Elevation Assembly, UD2A1A1 (4 Sheets)	2 − 90
FIGURE 6.	Manual Drive Assembly, UD2A1A1A1 and UD2A1A3A1	2 − 98
FIGURE 7.	Data Package Assembly, UD2A1A1A2 and UD2A1A3A2	2 − 100
FIGURE 8.	Azimuth Assembly, UD2A1A3 (Limited Production) (2 Sheets)	2 − 102
FIGURE 9.	Azimuth Assembly, UD2A1A3 (Full Scale Production and Redundant Configurations)	2 − 107
FIGURE 10.	Azimuth Drive Module Assembly, (Part of UD2A1A3)	2 − 110
FIGURE 11.	Gearbox Assembly, UD2A1A1A3 and UD 2A1A3A3 (3 Sheets)	2 − 114
FIGURE 12.	Feed Antenna Assembly, UD2A2	2 − 121
FIGURE 13.	Radar Transmitter, UD3 (4 Sheets)	2 − 123
FIGURE 14.	Control Panel, UD3A1	2 − 145
FIGURE 15.	Oil Tank Assembly, UD3A7 (2 Sheets)	2 − 151
FIGURE 16.	Modulator Pulse Assembly, UD3A12 (5 Sheets)	2 − 159
FIGURE 17.	Radar Receiver, UD4 (6 Sheets)	2 − 172
FIGURE 18.	RF Panel Assembly (Part of UD4) (4 Sheets)	2 − 186
FIGURE 19.	Hinged Door Assembly (Part of UD4) (3 Sheets)	2 − 196
FIGURE 20.	RDA Data Processor, UD5 (8 Sheets)	2 − 207
FIGURE 21.	Swingout Power Subsystem, UD5PS5, and UD41PS1	2 − 251
FIGURE 22.	RDA VME Assembly, UD5A1	2 − 253
FIGURE 23.	Maintenance/RDA Panel Assembly, UD5A2	2 − 256
FIGURE 24.	DAU Panel Assembly, UD5A3	2 − 259
FIGURE 25.	SCSI Assembly, UD5A5	2 − 263
FIGURE 26.	Digital Control Unit, UD5A6	2 − 267
FIGURE 27.	Pedestal Power Amplifier, UD5A7 (2 Sheets)	2 − 270
FIGURE 28.	Programmable Signal Processor, UD5A9	2 − 275
FIGURE 29.	Hardwired Signal Processor, UD5A10	2 − 277
FIGURE 30.	M5/ES Chassis Assembly, RDA, UD5A12	2 − 279
FIGURE 31.	Waveguide Pressurization Unit, UD6 (2 Sheets)	2 − 282
FIGURE 32.	Dual Outlet Waveguide Pressurization Unit, UD6 (2 Sheets)	2 − 285
FIGURE 33.	Shelter, UD7 (2 Sheets)	2 − 289
FIGURE 34.	MLOS Group (2 Sheets)	2 − 299
FIGURE 35.	RDA Site Generator Shelter, UD10	2 − 307
FIGURE 36.	ONAN Generator/Transfer Switch System (3 Sheets)	2 − 312

Figure		Page
FIGURE 37.	KOHLER Generator/Transfer Switch System (5 Sheets)	2 − 317
FIGURE 38.	Steel Tower, UD11	2 − 330
FIGURE 39.	Radome, UD12	2 − 332
FIGURE 40.	MLOS Equipment Shelter, UD13	2 − 335
FIGURE 41.	Level II Recorder Equipment, UD16 (3 Sheets)	2 − 338
FIGURE 42.	Microwave Radio, UD19	2 − 343
FIGURE 43.	SCSI Enclosure Assembly, UD21A9 and UD41A15	2 − 347
FIGURE 44.	Microwave Radio, UD39	2 − 351
FIGURE 45.	Principal User Processor Group (2 Sheets)	2 − 354
FIGURE 46.	PUP Data Processor, UD41 (5 Sheets)	2 − 365
FIGURE 47.	PUP VME Assembly, UD41A7	2 − 389
FIGURE 48.	Graphics Processor Assembly, UD41A13 (2 Sheets)	2 − 391
FIGURE 49.	PUP M5/ES Chassis Assembly, UD41A16	2 − 397
FIGURE 50.	PUP Workstation (3 Sheets)	2 − 400
FIGURE 51.	Shelter, Transition Power Maintenance, UD60 (3 Sheets)	2 − 407
FIGURE 52.	Electric Toilet, UD60A4	2 − 419
FIGURE 53.	Powerware 9315−50 Cabinet, UD62	2 − 422
FIGURE 54.	Cabinet Divider	2 − 424
FIGURE 55.	DC Capacitor Pan Assembly, UD62A1	2 − 428
FIGURE 56.	Maintenance Bypass Module, UD64	2 − 430
FIGURE 57.	Inverter Assembly, UD62A8	2 − 432
FIGURE 58.	Rectifier Assembly, UD62A9	2 − 434
FIGURE 59.	Static Switch Module, UD62A3	2 − 436
FIGURE 60.	Monitor Panel Assembly, UD62A5	2 − 438
FIGURE 61.	685 Battery Cabinet, UD63	2 − 440
FIGURE 62.	Supervisory Contact Module, UD65	2 − 442
FIGURE 63.	RPG Group Assembly For UD70/170 (5 Sheets)	2 − 445
FIGURE 64.	RPG Processor Communications Assembly, UD70/170 (6 Sheets)	2 − 457
FIGURE 65.	BDDS Processor Assembly, UD70A1/UD72A1	2 − 477
FIGURE 66.	RPG Processor Assembly, UD70/170A7	2 − 479
FIGURE 67.	MSCF Workstation Component Location, UD71, and UD79 (2 Sheets)	2 − 481
FIGURE 68.	RRRAT Equipment, UD34 and UD32 (2 Sheets)	2 − 486
FIGURE 69.	MSCF Processor Assembly (UD71A1), UD70A1, and UD72A1	2 − 490
FIGURE 70.	Remote BDDS Group (UD72, UD73, and UD74) (2 Sheets)	2 − 492

Section I

Introduction

1−1.1 GENERAL.

This Illustrated Parts Breakdown (IPB) lists, describes, and illustrates the items necessary to support on−site field−level maintenance of the Doppler Meteorological Radar WSR−88D manufactured by Unisys Corporation (CAGE code 56232). The information contained in this manual is used for parts requisitioning, storing, issuing, identification, and for illustrating assembly and disassembly relationships, assigning repair level responsibilities and disposition instructions.

1−1.2 INTENDED USE.

This publication is intended for use by all personnel concerned with on−site maintenance and operation of the radar. This IPB therefore does not go to the depot or piece part level, although some illustrations will provide breakdowns within the Line Replaceable Unit (LRU). The parts listings are intended only for the LRU level with attaching hardware, in accordance with the WSR−88D maintenance concept.

1−1.3 ARRANGEMENT.

The IPB is divided into four sections as follows:

Section I − Introduction
Section II − Maintenance Parts List
Section III − Numerical Index
Section IV − Reference Designation Index

1−1.3.1 Section II − Maintenance Parts List. This section contains the Maintenance Parts List (MPL) separated into figures by assemblies and keyed to associated illustrations by figure and index numbers. The relation of each part to its next higher assembly is shown either by indentation (paragraph 1−1.3.1.4) or by figure cross−reference notes (paragraph 1−1.3.1.5).

1−1.3.1.1 Figure and Index Number Column. The figure and index number column lists figure and index numbers that key all significant parts of the MPL to the related illustrations.

1−1.3.1.2 Reference Designation Column. This column lists the reference designations shown on assembly drawings, schematics and wiring diagrams pertaining to the system. An asterisk (*) in this column indicates a special feature of the part with explanations presented at the bottom of the page. The note “Replace as a Set” indicates that the parts noted must be replaced as a set. “Not Shown” indicates that the part is not shown on the illustration. (Where possible, call−outs on illustrations for parts in this category will be indicated in the general area of location or with an item that it is associated with.)

1−1.3.1.3 Part Number Column. Part numbers used in this column are selected according to the following order of preference: Government Standards, Industry Standards, Original Manufacturers,

Commercial and Prime Design Manufacturers. As applicable, alternate vendor part numbers are shown in the description column. The dash number is site dependent and reference should be made to site System Allocation Document (SAD) for complete part number.

1−1.3.1.4 Indentation Column. The indentation number indicates the relationship of a part to the next higher assembly. For example: a part shown with an indenture of 3 indicates that it is a part of the immediately preceding next higher assembly shown with an indenture of 2, excluding attaching parts.

1−1.3.1.5 Description Column. The description column contains the nomenclature appearing in the title block of the drawing to which the part was manufactured. The phrase “For NHA see Fig...” indicates the next higher assembly. The phrase “For breakdown see Fig...” indicates the location of the breakdown for the assembly in the MPL. Alternate vendor part numbers (paragraph 1−1.3.1.3) are listed and identified following the description of the parts to which they apply. A five digit cage code precedes its respective part number or drawing number.

1−1.3.1.6 Attaching Parts. The caption “Attaching Parts” is used to show those parts that attach the component to the next higher assembly. The last attaching part is followed by the symbol “−−−−−−−−”. Index numbers are not assigned to attaching parts when the order of disassembly of the attaching part is apparent.

1−1.3.1.7 CAGE Code Column. The appropriate CAGE (Commercial and Government Entity) code, published in current issues of Cataloging Handbook H4/H8, is listed in this column directly opposite each part, model and type number listed in the part number column.

1−1.3.1.8 No CAGE in H4/H8. When a CAGE code for the appropriate manufacturer is not published in the current issue of the H4/H8 series, the word “none” is inserted in this column opposite the part number listed in the part number column. The complete name and address of the manufacturer is shown in parentheses at the end of the description.

1−1.3.1.9 Quantity Per Assembly Column. The quantity shown in this column represents the units required for one next higher assembly, subassembly, or sub−subassembly.

1−1.3.1.10 Source, Maintenance, and Recoverability (SMR) Code Column. This column contains the five−digit Joint Military Service Uniform SMR codes assigned by the Government. Definitions of these SMR codes are shown in the matrix.

1−1.3.1.11 Usable On Code Column. This column contains codes to indicate the configuration of the end item to which the listed assemblies and parts apply.

1−1.3.1.12 Usable On Code. The meanings of Usable On Codes appear at the end of each figure. When a part applies to all configurations, the column is blank.

1−1.3.2 Section III − Numerical Index. The Numerical Index contains an alphanumeric listing of all part numbers contained in the MPL. All part numbers are referenced to the figure and index number(s) in which they appear. Figure and index numbers are given for the first occurrence only of Government standard parts.

1−1.3.3 Section IV − Reference Designation Index. The Reference Designation Index contains an alphanumeric listing of reference designations assigned to electrical and electronic components listed in the MPL.

1−1.4 HOW TO USE THIS IPB.

Refer to Pages 1−4 through 1−7 for a detailed description on how to use this IPB. Refer to FIGURE 1−1 on Page 1 − 4 for the Source, Maintenance, and Recoverability (SMR) coding matrix.

MAINTENANCE									
SOURCE				USE		REPAIR		RECOVERABILITY	
1st Position		2nd Position		3rd Position		4th Position		5th Position	
P	Procurable	A	Stocked	O	Remove/Replace by Organizational Level	Z	No Repair	Z	Nonreparable Condemn by 3rd Position Level
		B	Insurance						
		C	Deteriorative						
		D	Depot						
		E	Support Equipment, Stocked			B	Recondition		
		F	Support Equipment, Nonstocked					O	Reparable Condemn by Organizational (or Field or Depot)
		G	Life of System Support						
K	Component of a Repair Kit	F	Intermediate Kit	F	Remove/Replace by Intermediate Level (Note 1)	O	Repair by Organizational	F	Reparable Condemn by Intermediate (or Depot)
		D	Depot Kit						
		B	In Both Kits			F	Repair by Intermediate		
M	Manufacture	O	Organization						
		F	Intermediate						
		D	Depot	D	Remove/Replace by Depot Level	D	Limited Repair by O or F Level	D	Reparable Condemn by Depot Only (Note 2)
A	Assemble	O	Organizational						
		F	Intermediate						
		D	Depot				Overhaul by Depot		
X	Nonprocured	A	Requisition NHA			L	Repair by Depot	A	Special Handling
		B	Reclamation or Requisition by Part Number						
		C	Mfg Drawings						

NOTE. Recoverability Code “L” is no longer valid. When this code is encountered in existing TOs, apply this definition: Reparable item, Condemn and Dispose of at Depot Level only.

1. Organizational level maintenance activities operating under the two−level maintenance concept may perform limited intermediate level maintenance when the proper test equipment, trained personnel, and current technical data are available.
2. Items with a recoverability code of “D” can be condemned at field level if the item is damaged or worn totally beyond repair, directed condemned, nonlisted in USAF Federal Supply Catalog, coded “DSP” or normal source of supply is local purchase or local manufacture.

FIGURE 1−1. SMR Coding Matrix

How to Use the Illustrated Parts Breakdown

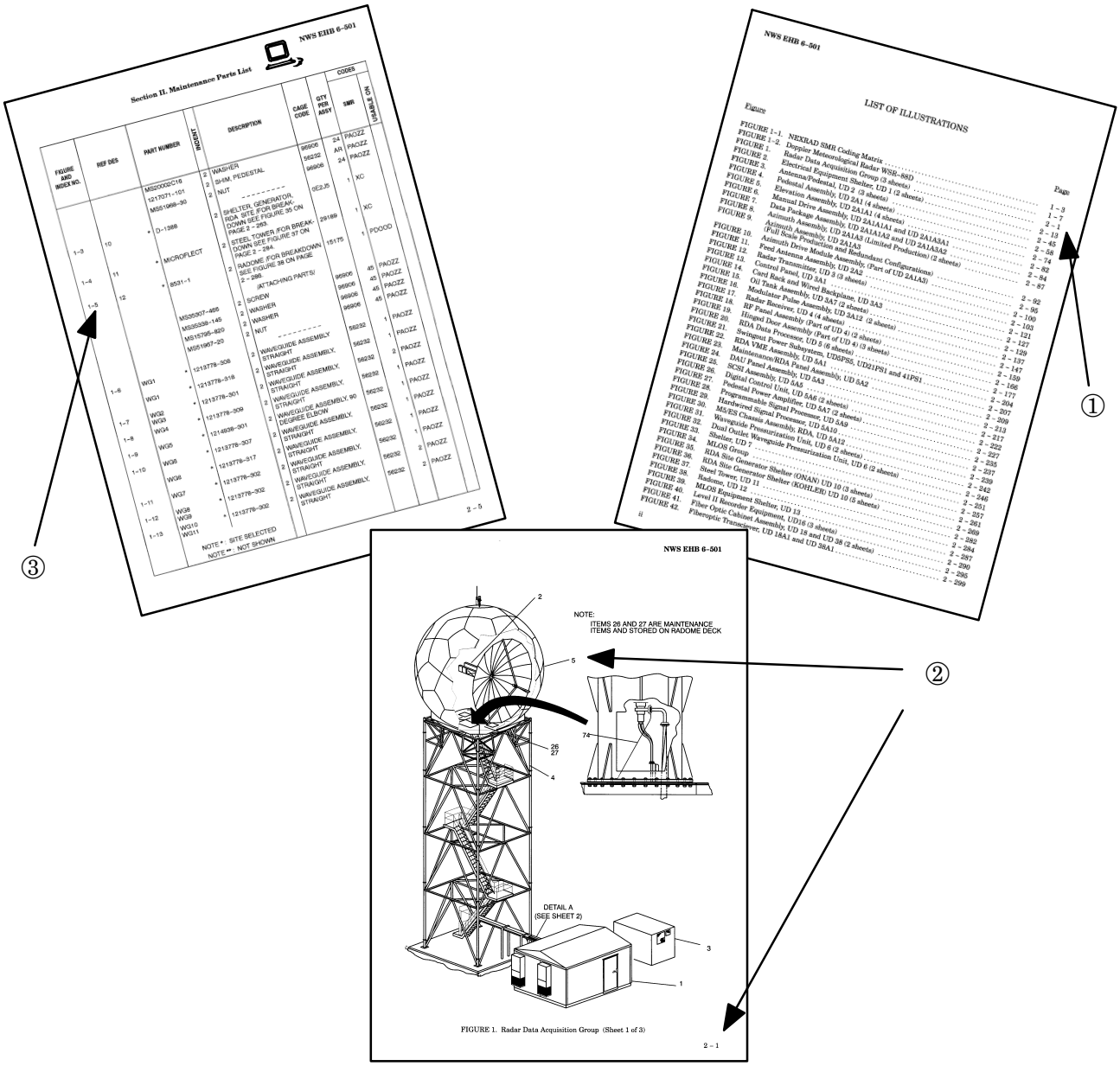

WHEN THE PART NUMBER IS NOT KNOWN

1. Determine the function and application of the part required. Turn to the List of Illustrations and select the most appropriate title. Note the illustration page number.
2. Turn to the page indicated and locate the desired part on the illustration.
3. From the illustration, obtain the index number assigned to the part desired. Refer to the accompanying description for specific information regarding the part.

How to Use the Illustrated Parts Breakdown

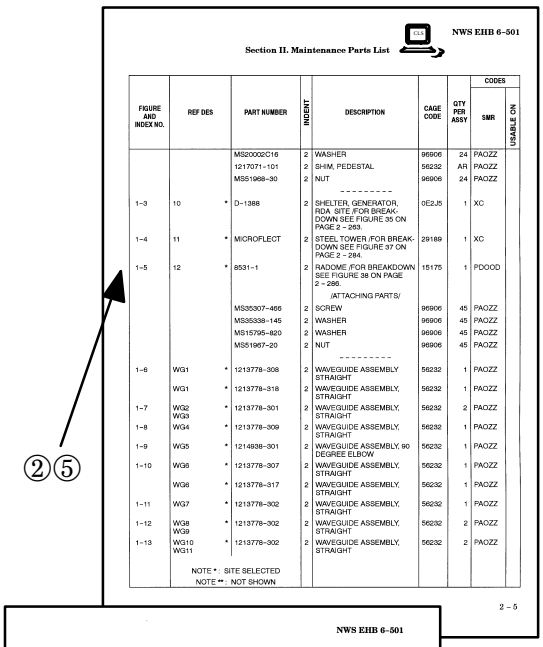

NWS EHB 6−501

Section II. Maintenance Parts List

FIGURE AND INDEX NO.	REF DES		PART NUMBER	INCDNT	DESCRIPTION	CAGE CODE	QTY PER ASSY	CODES SMR	CODES USABLE ON
			MS20002C16	2	WASHER	96906	24	PAOZZ	
			1217071−101	2	SHIM, PEDESTAL	56232	AR	PAOZZ	
			MS51968−30	2	NUT	96906	24	PAOZZ	
					− − − − − − − − −				
1−3	10	*	D−1388	2	SHELTER, GENERATOR, RDA. SITE ,FOR BREAK-DOWN SEE FIGURE 35 ON PAGE 2 − 263.	0E2J5	1	XC	
1−4	11	*	MICROFLECT	2	STEEL TOWER ,FOR BREAK-DOWN SEE FIGURE 37 ON PAGE 2 − 284.	29189	1	XC	
1−5	12	*	8531−1	2	RADOME ,FOR BREAKDOWN SEE FIGURE 38 ON PAGE 2 − 286.	15175	1	PDOOD	
					/ATTACHING PARTS/				
			MS35307−466	2	SCREW	96906	45	PAOZZ	
			MS35338−145	2	WASHER	96906	45	PAOZZ	
			MS15795−820	2	WASHER	96906	45	PAOZZ	
			MS51967−20	2	NUT	96906	45	PAOZZ	
					− − − − − − − − −				
1−6	WG1	*	1213778−308	2	WAVEGUIDE ASSEMBLY STRAIGHT	56232	1	PAOZZ	
	WG1	*	1213778−318	2	WAVEGUIDE ASSEMBLY, STRAIGHT	56232	1	PAOZZ	
1−7	WG2 WG3	*	1213778−301	2	WAVEGUIDE ASSEMBLY, STRAIGHT	56232	2	PAOZZ	
1−8	WG4	*	1213778−309	2	WAVEGUIDE ASSEMBLY, STRAIGHT	56232	1	PAOZZ	
1−9	WG5	*	1214938−301	2	WAVEGUIDE ASSEMBLY, 90 DEGREE ELBOW	56232	1	PAOZZ	
1−10	WG6	*	1213778−307	2	WAVEGUIDE ASSEMBLY, STRAIGHT	56232	1	PAOZZ	
	WG6	*	1213778−317	2	WAVEGUIDE ASSEMBLY, STRAIGHT	56232	1	PAOZZ	
1−11	WG7	*	1213778−302	2	WAVEGUIDE ASSEMBLY, STRAIGHT	56232	1	PAOZZ	
1−12	WG8 WG9	*	1213778−302	2	WAVEGUIDE ASSEMBLY, STRAIGHT	56232	2	PAOZZ	
1−13	WG10 WG11	*	1213778−302	2	WAVEGUIDE ASSEMBLY, STRAIGHT	56232	2	PAOZZ	

NOTE * : SITE SELECTED
NOTE ** : NOT SHOWN

2 − 5

②⑤

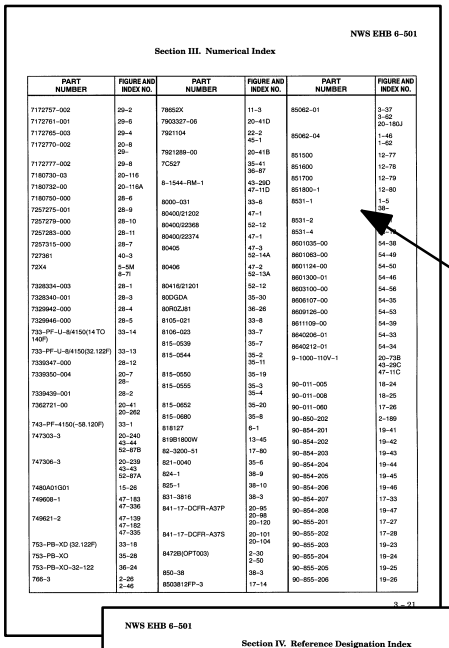

NWS EHB 6−501

Section III. Numerical Index

PART NUMBER	FIGURE AND INDEX NO.	PART NUMBER	FIGURE AND INDEX NO.	PART NUMBER	FIGURE AND INDEX NO.
7172757−002	29−2	78652X	11−3	85062−01	3−37 3−42
7172761−001	29−6	7903327−06	20−41D		20−180J
7172765−003	29−4	7921104	22−2 45−1	85062−04	1−46 1−52
7172770−002	20−8 29−	7921289−00	20−41B	851500	12−77
7172777−002	29−8	7C527	35−41 36−87	851600	12−78
7180730−03	20−116			851700	12−79
7180732−00	20−116A	8−1544−RM−1	43−29D 47−11D	851800−1	12−80
7180750−000	28−6	8000−031	33−6	8531−1	1−5 38−
7257275−001	28−9	80400/21202	47−1		
7257279−000	28−10	80400/22368	52−12	8531−2	
7257283−000	28−11	80400/22374	47−1	8531−4	
7257315−000	28−7	80405	47−3 52−14A	8601035−00	54−38
72736I	40−3			8601063−00	54−49
72X4	5−5M 6−7I	80406	47−2 52−13A	8601124−00	54−50
				8601300−01	54−46
7328334−003	28−1	80416/21201	52−12	8603100−00	54−56
7328340−001	28−3	80DGDA	35−30	8606107−00	54−35
7329942−000	28−4	80RDZJ81	36−26	8609126−00	54−53
7329946−000	28−5	8105−021	33−8	8611109−00	54−39
733−PF−U−8/4150(14 TO 140F)	33−14	8106−023	33−7	8640206−01	54−33
		815−0539	36−7	8640212−01	54−34
733−PF−U−8/4150(32.122F)	33−13	815−0544	35−2 35−11	9−1000−110V−1	20−73B 43−29C 47−11C
7339347−000	28−12				
7339350−004	20−7 28−	815−0550	35−19		
		815−0555	35−3 36−4	90−011−005	18−24
7339439−001	28−2			90−011−008	18−25
7362721−00	20−41 20−262	815−0652	35−20	90−011−060	17−26
		815−0680	35−8	90−850−202	2−189
743−PF−4150(−58.120F)	33−1	818127	6−1	90−854−201	19−41
747303−3	20−240 43−44 52−87B	819/9800W	13−45	90−854−202	19−42
		82−3200−51	17−80	90−854−203	19−43
747306−3	20−239 43−43 52−87A	821−0040	35−6	90−854−204	19−44
		824−1	38−9	90−854−205	19−45
7480A01G01	15−26	825−1	38−10	90−854−206	19−46
749608−1	47−183 47−336	831−3816	38−3	90−854−207	17−33
		841−17−DCFR−A37P	20−95 20−98	90−854−208	19−47
749621−2	47−139 47−182 47−335		20−120	90−855−201	17−27
		841−17−DCFR−A37S	20−101 20−104	90−855−202	17−28
753−PB−XD (32.122F)	33−18	84728(OPT003)	2−30 2−50	90−855−203	19−23
753−PB−XO	35−28			90−855−204	19−24
753−PB−XO−32−122	36−24	850−38	38−3	90−855−205	19−25
766−3	2−26 2−46	8503812FP−3	17−14	90−855−206	19−26

3 − 21

①

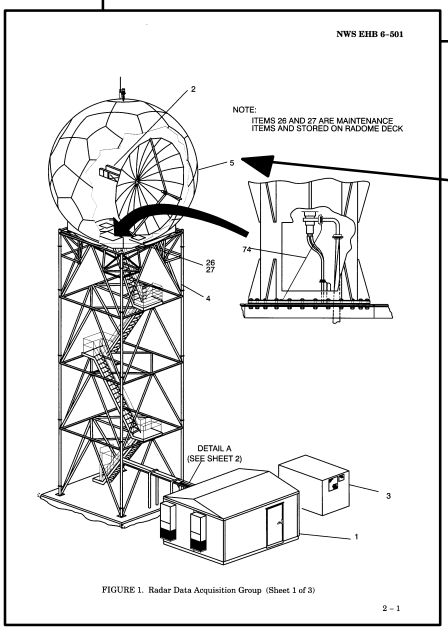

NWS EHB 6−501

FIGURE 1. Radar Data Acquisition Group (Sheet 1 of 3)

2 − 1

③⑥

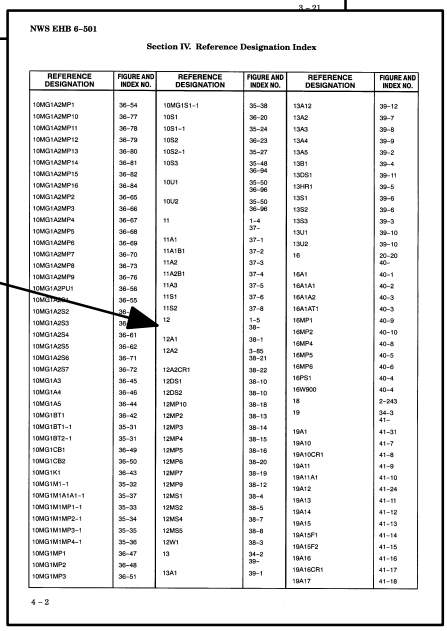

NWS EHB 6−501

Section IV. Reference Designation Index

REFERENCE DESIGNATION	FIGURE AND INDEX NO.	REFERENCE DESIGNATION	FIGURE AND INDEX NO.	REFERENCE DESIGNATION	FIGURE AND INDEX NO.
10MG1A2MP1	36−54	10MG1S1−1	35−38	13A12	39−12
10MG1A2MP10	36−77	10S1	36−20	13A2	39−7
10MG1A2MP11	36−78	10S1−1	35−24	13A3	39−8
10MG1A2MP12	36−79	10S2	36−23	13A4	39−9
10MG1A2MP13	36−80	10S2−1	35−27	13A5	39−2
10MG1A2MP14	36−81	10S3	35−48 36−94	13S1	39−4
10MG1A2MP15	36−82			13DS1	39−11
10MG1A2MP16	36−84	10U1	35−50 36−96	13HR1	39−5
10MG1A2MP2	36−65	10U2	35−50 36−96	13S1	39−6
10MG1A2MP3	36−66			13S2	39−6
10MG1A2MP4	36−67	11	1−4 37−	13S3	39−3
10MG1A2MP5	36−68			13U1	39−10
10MG1A2MP6	36−69	11A1	37−1	13U2	39−10
10MG1A2MP7	36−70	11A1B1	37−2	16	20−20 40−
10MG1A2MP8	36−73	11A2	37−3		
10MG1A2MP9	36−76	11A2B1	37−4	16A1	40−1
10MG1A2PU1	36−58	11A3	37−5	16A1A1	40−2
10MG1A2S1	36−55	11S1	37−6	16A1A2	40−3
10MG1A2S2	36−	11S2	37−8	16A1AT1	40−3
10MG1A2S3	36−	12	1−5 38−	16MP1	40−9
10MG1A2S4	36−61			16MP2	40−10
10MG1A2S5	36−62	12A1	38−1	16MP4	40−8
10MG1A2S6	36−71	12A2	3−85 38−21	16MP5	40−5
10MG1A2S7	36−72	12A2CR1	38−22	16MP6	40−6
10MG1A3	36−45	12DS1	38−10	16PS1	40−4
10MG1A4	36−46	12DS2	38−10	16W900	40−4
10MG1A5	36−44	12MP10	38−18	18	2−243
10MG1BT1	36−42	12MP2	38−13	19	34−3 41−
10MG1BT1−1	35−31	12MP3	38−14		
10MG1BT2−1	35−31	12MP4	38−15	19A1	41−31
10MG1CB1	36−49	12MP5	38−16	19A10	41−7
10MG1CB2	36−50	12MP6	38−20	19A10CR1	41−8
10MG1K1	36−43	12MP7	38−19	19A11	41−9
10MG1M1−1	35−32	12MP9	38−12	19A11A1	41−10
10MG1M1A1A1−1	35−37	12MS1	38−4	19A12	41−24
10MG1M1MP1−1	35−33	12MS2	38−5	19A13	41−11
10MG1M1MP2−1	35−34	12MS4	38−7	19A14	41−12
10MG1M1MP3−1	35−35	12MS5	38−8	19A15	41−13
10MG1M1MP4−1	35−36	12W1	38−3	19A15F1	41−14
10MG1MP1	36−47	13	34−2 39−	19A15F2	41−15
10MG1MP2	36−48			19A16	41−16
10MG1MP3	36−51	13A1	39−1	19A16CR1	41−17
				19A17	41−18

4 − 2

④

WHEN THE PART NUMBER OR REFERENCE DESIGNATION IS KNOWN

1. When the part number is known, refer to Section III Numerical Index. Locate the part number assigned to the part number.
2. Turn to the figure number indicated and locate the index number referenced in the Numerical Index.
3. If a pictorial representation of the part, or its location is desired, refer to the same index number on the accompanying illustration.
4. When the reference designation is known, refer to Section IV Reference Designation Index. Locate the reference designation and note the figure and index number and the part number assigned.
5. Turn to the figure indicated and locate the index number referenced in the Reference Designation Index.
6. If a pictorial representation of the part, or its location is desired, refer to the same index number on the accompanying illustration.

1−1.5 CONSOLIDATED LOGISTICS SYSTEM UNIVERSAL RESOURCE LOCATOR (CLS URL).

Beginning with Revision 5, Change 1, a link to the Consolidated Logistics System URL is located at the top of each Maintenance Parts List (MPL) page. While the URL link graphic is only text in the hard copy, it is a hot link in the CD−ROM copy. Addition of this feature is intended to provide an expedient way to obtain NEXRAD part information.

Both the hard copy and the CD−ROM versions of the manual are available at every site. Instructions on how to reach the NLSC CLS website from either version are included in the following paragraphs. A requirement for the use of either set of instructions is site Internet access. Determining which option to use, CD ROM or hard copy, is a site technician decision.

A technician who is using the CD−ROM manual need only click on the CLS graphic−−−−located at the top of each MPL page in order to reach the NLSC Consolidated Logistics System . Clicking on this link automatically launches the screen to the NLSC CLS part data website (Step 5).

The technician should then select the ASN (Reference Designator) option and enter the ASN (Reference Designator) using the R400− prefix as indicated (Step 6). Then choose “Submit query”. Available information about the part is then retrieved and displayed on the screen. In some cases, selection of the “Show Image” choice will display a picture of the selected part.

NOTE

Information on some parts is not yet available.

If the technician is using the hard copy version of the manual, the CLS site can be reached by entering the designated Internet address of CASC (Step 1). Once at the CASC Home Page, select the indicated sequence of choices shown in Steps 2−4 in order to arrive at the CLS part data website (Step 5).

1. Enter the site address **www.casc.noaa.gov**
2. Select **NLSC**
3. Select **Consolidated Logistics System**
4. Select **Milstrip NEXRAD/ASOS Products**
5. If you know the NSN, type it in the box, and select **Submit query**
6. If you do not know the NSN, select the **ASN** option, enter the ASN as shown in the example using the **R400−** prefix, and **Submit query**
7. If you want to view a picture of the part, select **Show Image**

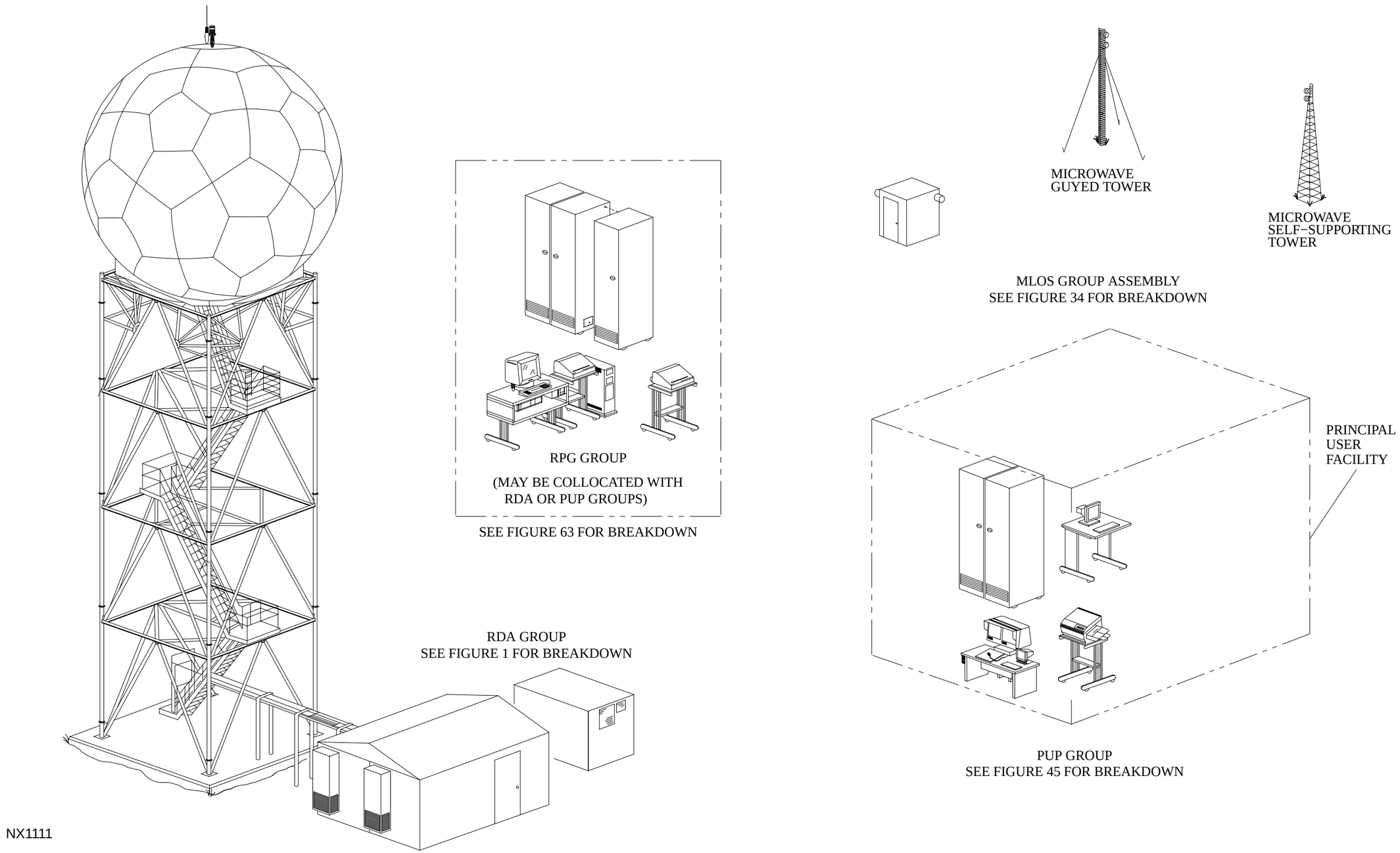

FIGURE 1−2. Doppler Meteorological Radar WSR−88D

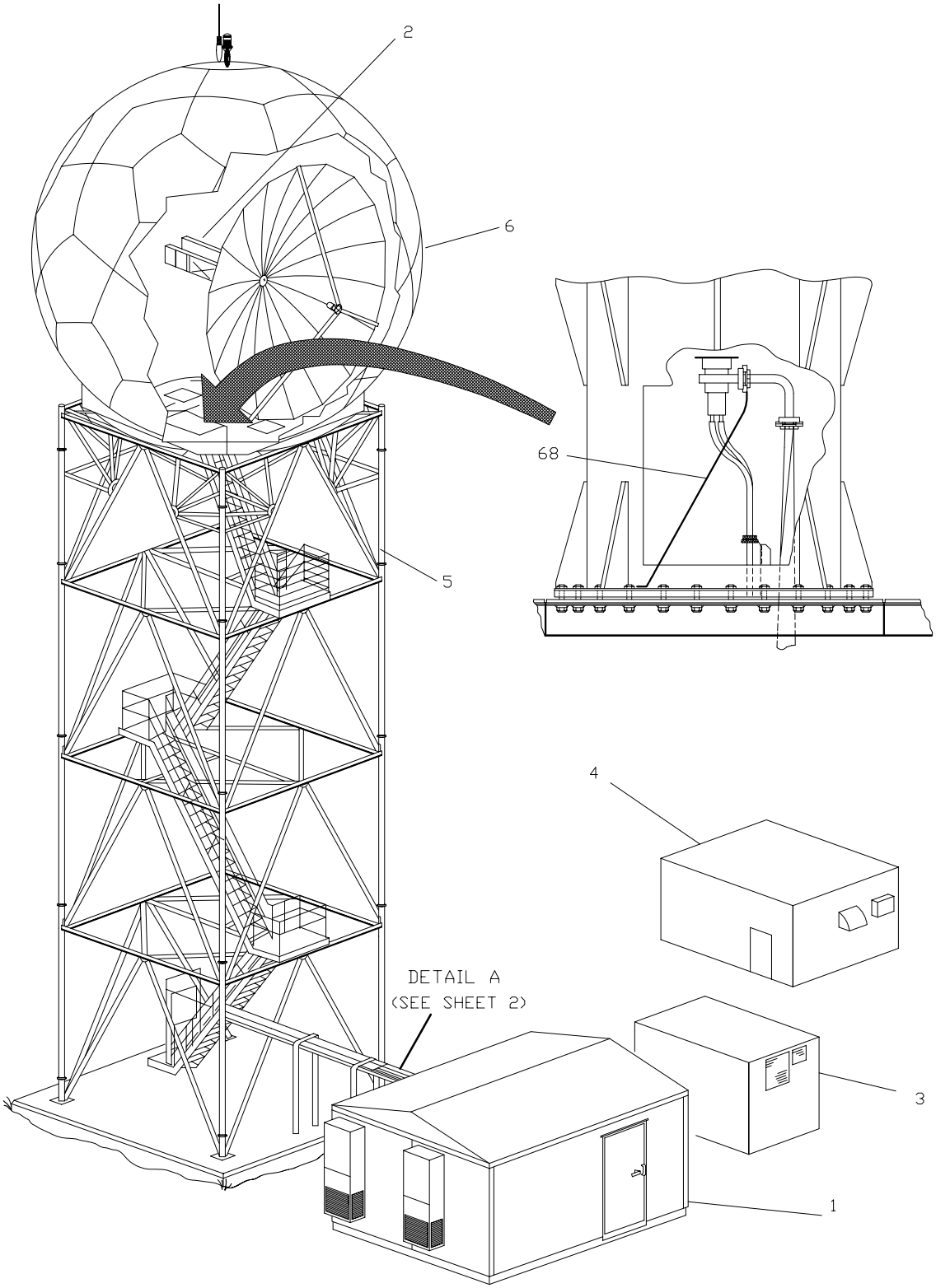

NX1112

FIGURE 1. Radar Data Acquisition Group (Sheet 1 of 3)

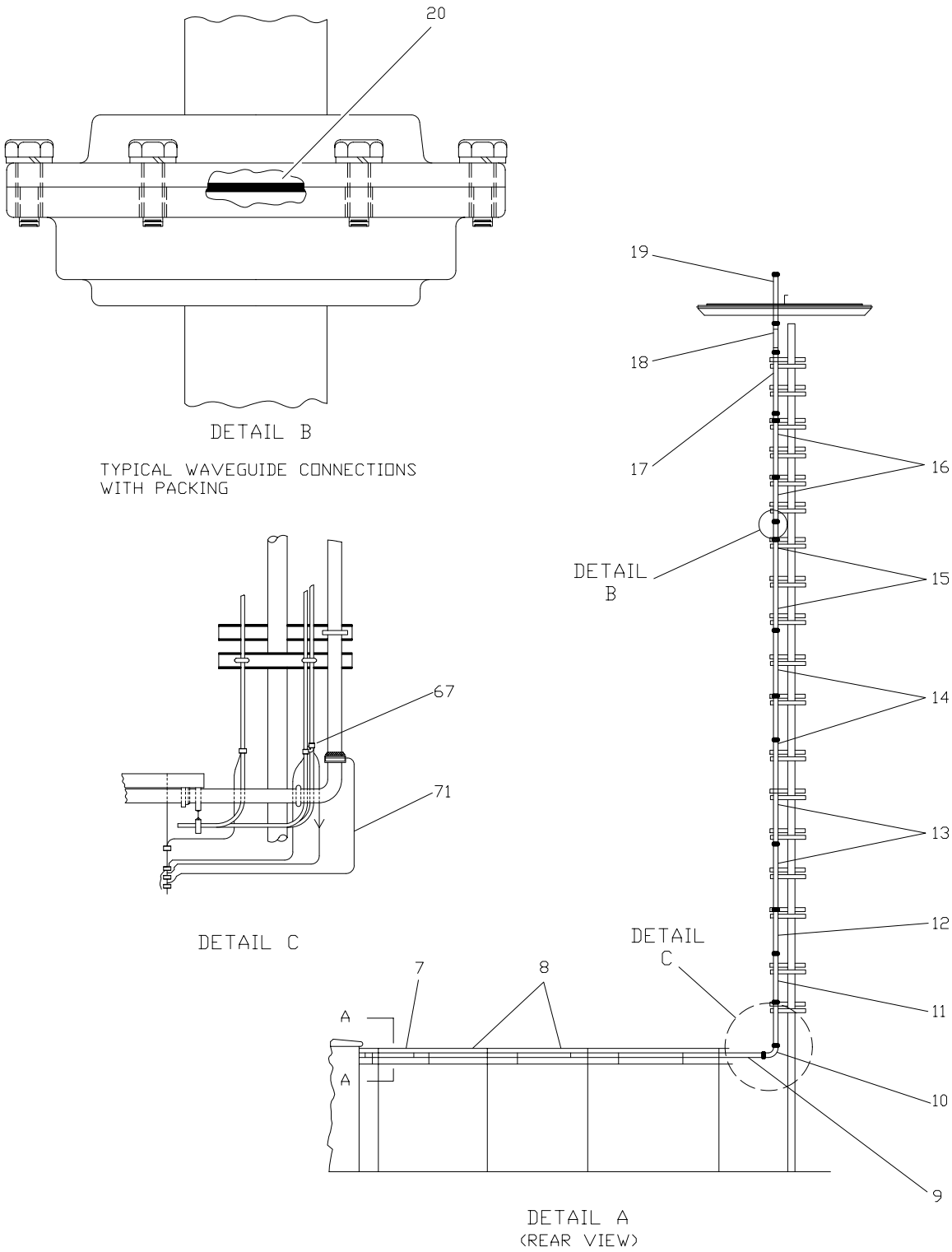

NX1113

FIGURE 1. Radar Data Acquisition Group (Sheet 2 of 3)

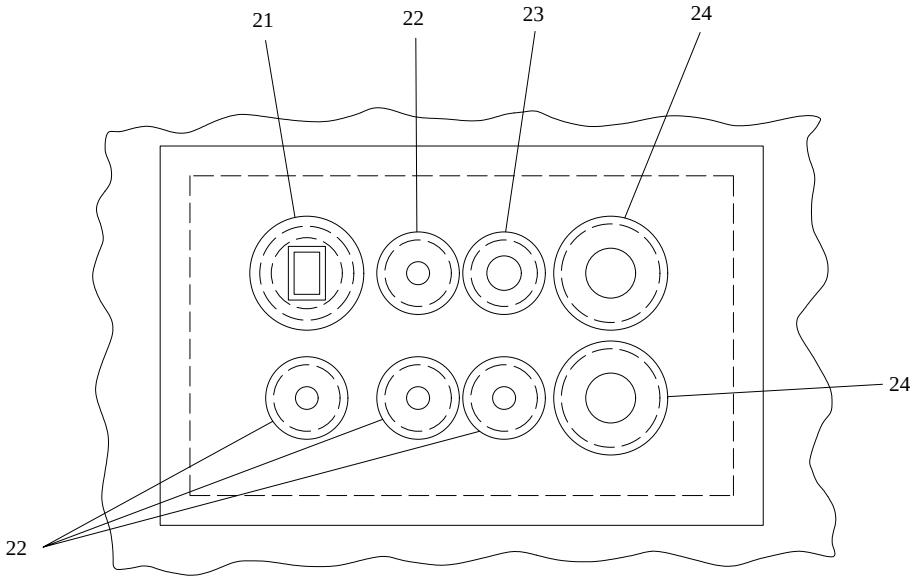

VIEW A−A

NX1114

CABLE ASSEMBLIES (NOT SHOWN)

INDEX NO.	REF DES	FROM	TO
1−26	W3	P1(5J4)	P2(2A1A3J1)
1−31	W4	P1(5J3)	P2(2A1A3J2)
1−35	*W10	P1(2A1J3)	P2(4J2)
1−40	*W31	P1(5J5)	P2(10A9J1)
1−45	**W53	P1(2W5P1)	P2(W55P2)
1−47	**W54	P1(2W6P1)	P2(W56P2)
1−53	*W110	P1(2A1J5)	P2(4J2)
1−57	*W131	P1(105J5)	P2(10A9J1)

* SITE DEPENDENT

** ASSEMBLED AT SITES

FIGURE 1. Radar Data Acquisition Group (Sheet 3 of 3)

FIGURE AND INDEX NO.	REF DES	PART NUMBER	INDENT	DESCRIPTION	CAGE CODE	QTY PER ASSY	CODES SMR	CODES USABLE ON
1−	*	1223831−XXX	1	RADAR DATA ACQUISITION GROUP (5 M TOWER)	56232	1	XB	A
	*	1215200−XXX	1	RADAR DATA ACQUISITION GROUP (10 M TOWER)	56232	1	XB	B
	*	1215201−XXX	1	RADAR DATA ACQUISITION GROUP (15 M TOWER)	56232	1	XB	C
	*	1215202−XXX	1	RADAR DATA ACQUISITION GROUP (20 M TOWER)	56232	1	XB	D
	*	1215203−XXX	1	RADAR DATA ACQUISITION GROUP (25 M TOWER)	56232	1	XB	E
	*	1215204−XXX	1	RADAR DATA ACQUISITION GROUP (30 M TOWER)	56232	1	XB	F
		1217677−301	1	TRAINING SITE, KEESLER AFB	56232	1	XB	G
		1217677−302	1	TRAINING SITE, KEESLER AFB	56232	1	XB	H
		1218809−301	1	DOD DEPOT, KC BANNISTER	56232	1	XB	J
		1217124−301	1	TRAINING SITE, KANSAS CITY	56232	1	XB	K
		1222975−301	1	NWS DEPOT, KANSAS CITY	56232	1	XB	L
		1223757−301	1	MISSOULA, MT, DE−SHELTERIZED	56232	1	XB	N
		1223966−301	1	MEDFORD, OR, DE−SHELTERIZED	56232	1	XB	P
1−1	1 *	1213758−XXX	2	SHELTER, ELECTRICAL EQUIPMENT (For breakdown see FIGURE 2 on Page 2 − 17)	56232	1	XB	C D E F
	1 *	1215206−XXX	2	SHELTER, ELECTRICAL EQUIPMENT (For breakdown see FIGURE 2 on Page 2 − 17)	56232	1	XB	A B C D E F
	1 *	1215207−XXX	2	SHELTER, ELECTRICAL EQUIPMENT (For breakdown see FIGURE 2 on Page 2 − 17)	56232	1	XB	A C D E F

NOTE * : SITE DEPENDENT
NOTE ** : NOT SHOWN
NOTE *** : CALL ROC HOTLINE FOR SITE SPECIFIC PART INFORMATION

FIGURE AND INDEX NO.	REF DES	PART NUMBER	INDENT	DESCRIPTION	CAGE CODE	QTY PER ASSY	CODES SMR	CODES USABLE ON
	1 *	1221207−XXX	2	SHELTER ASSEMBLY, RDA, 24 FOOT (For breakdown see FIGURE 2 on Page 2 − 17)	56232	1	XB	C D E F
	1 *	1222344−XXX	2	SHELTER ASSEMBLY, REDUNDANT RDA (For breakdown see FIGURE 2 on Page 2 − 17)	56232	1	XB	C E F
1−2	2 *	1214777−XXX	2	ANTENNA/PEDESTAL (For breakdown see FIGURE 3 on Page 2 − 57)	56232	1	PBFDD	B C D E F G K
	2 *	1219667−XXX	2	ANTENNA/PEDESTAL (For breakdown see FIGURE 3 on Page 2 − 57)	56232	1	PBFDD	A B C D E F H J N P
				(ATTACHING PARTS)				
		MS20002−16	2	WASHER	96906	24	PAOZZ	
		MS20002C16	2	WASHER	96906	24	PAOZZ	
		1217071−101	2	SHIM, PEDESTAL	56232	AR	PAOZZ	
		MS51968−30	2	NUT	96906	24	PAOZZ	
				− − − − − − − − −				
1−3	10 *	D−1388−X	2	SHELTER, GENERATOR, RDA SITE (For breakdown see FIGURE 35 on Page 2 − 307)	0E2J5	1	XC	
	10 *	D−1719	2	SHELTER, GENERATOR, RDA SITE (For breakdown see FIGURE 35 on Page 2 − 307)	0E2J5	1	XC	A

NOTE * : SITE DEPENDENT
NOTE ** : NOT SHOWN
NOTE *** : CALL ROC HOTLINE FOR SITE SPECIFIC PART INFORMATION

FIGURE AND INDEX NO.	REF DES	PART NUMBER	INDENT	DESCRIPTION	CAGE CODE	QTY PER ASSY	CODES SMR	CODES USABLE ON
1−4	60	D−3877/D−5748	2	SHELTER, TRANSITION POWER MAINTENANCE, TYPES 1 AND 2; ROC AND RALEIGH, NC (For breakdown see FIGURE 51 on Page 2 − 407)	0E2J5	1	PDDDD	
	60	D−4065/D−5751	2	SHELTER, TRANSITION POWER MAINTENANCE, TYPES 1 AND 2 (For breakdown see FIGURE 51 on Page 2 − 407)	0E2J5	1	PDDDD	
	60	D−4154/D−5750	2	SHELTER, TRANSITION POWER MAINTENANCE, TYPE 3; MEDFORD, OR, AND MISSOULA, MT (For breakdown see FIGURE 51 on Page 2 − 407)	0E2J5	1	PDDDD	
	60	D−4625/D−5749	2	SHELTER, TRANSITION POWER MAINTENANCE, TYPE 4 (For breakdown see FIGURE 51 on Page 2 − 407)	0E2J5	1	PDDDD	
	60	D−5606	2	SHELTER, TRANSITION POWER MAINTENANCE, TYPE 5 (For breakdown see FIGURE 51 on Page 2 − 407)	0E2J5	1	PDDDD	
	60	D−5659	2	SHELTER, TRANSITION POWER MAINTENANCE, TYPE 6 (For breakdown see FIGURE 51 on Page 2 − 407)	0E2J5	1	PDDDD	
	60	D−5660	2	SHELTER, TRANSITION POWER MAINTENANCE, TYPE 7 (For breakdown see FIGURE 51 on Page 2 − 407)	0E2J5	1	PDDDD	
	60	D−5938	2	SHELTER, TRANSITION POWER MAINTENANCE, TYPE 9 (For breakdown see FIGURE 51 on Page 2 − 407)	0E2J5	1	PDDDD	
1−5	11 *	MICROFLECT	2	STEEL TOWER (For breakdown see FIGURE 38 on Page 2 − 330)	29189	1	PDFDD	
1−6	12 *	8531−1	2	RADOME (For breakdown see FIGURE 39 on Page 2 − 332)	15175	1	PDFDD	
				(ATTACHING PARTS)				
		MS35307−466S316	2	SCREW	96906	45	PAOZZ	

NOTE * : SITE DEPENDENT
NOTE ** : NOT SHOWN
NOTE *** : CALL ROC HOTLINE FOR SITE SPECIFIC PART INFORMATION

FIGURE AND INDEX NO.	REF DES	PART NUMBER	INDENT	DESCRIPTION	CAGE CODE	QTY PER ASSY	CODES SMR	CODES USABLE ON
		MS35338−145	2	WASHER	96906	45	PAOZZ	
		MS15795−820	2	WASHER	96906	45	PAOZZ	
		MS51967−20	2	NUT	96906	45	PAOZZ	
				− − − − − − − − −				
1−7	WG1 *	1213778−318	2	WAVEGUIDE ASSEMBLY, STRAIGHT	56232	1	PAOZZ	A
	WG1 *	1213778−308 OR 1213778−325	2	WAVEGUIDE ASSEMBLY, STRAIGHT	56232	1	PAOZZ	B C D E F
	WG1 **	1213778−301	2	WAVEGUIDE ASSEMBLY, STRAIGHT	56232	1	PAOZZ	G
	WG1 **	TFT−86077	2	WAVEGUIDE ASSEMBLY, FLEXIBLE (80006) (ALT PN 127353) (56232) (spec dwg 1213779−201)	06351	1	PAOZZ	H
	WG1 **	1213778−302	2	WAVEGUIDE ASSEMBLY, STRAIGHT	56232	1	PAOZZ	K
	WG1 **	TFT−86083	2	WAVEGUIDE ASSEMBLY, FLEXIBLE (56232) (spec dwg 1214841−202)	06351	1	PAOZZ	N P
1−8	WG2 WG3 *	1213778−301	2	WAVEGUIDE ASSEMBLY, STRAIGHT	56232	2	PAOZZ	A B C D E F H
	WG2 **	1213778−301	2	WAVEGUIDE ASSEMBLY, STRAIGHT	56232	1	PAOZZ	K
	WG3 **	1217745−301	2	WAVEGUIDE ASSEMBLY, 90 DEGREE ELBOW	56232	1	PAOZZ	G K
	WG2 **	TFT−86077	2	WAVEGUIDE ASSEMBLY, FLEXIBLE (80006) (ALT PN 127353) (56232) (spec dwg 1213779−201)	06351	1	PAOZZ	G
	WG2 **	1213778−308	2	WAVEGUIDE ASSEMBLY, STRAIGHT	56232	1	PAOZZ	N P
	WG3 **	1214938−301	2	WAVEGUIDE ASSEMBLY, 90 DEGREE ELBOW	56232	1	PAOZZ	N

NOTE * : SITE DEPENDENT

NOTE ** : NOT SHOWN

NOTE *** : CALL ROC HOTLINE FOR SITE SPECIFIC PART INFORMATION

FIGURE AND INDEX NO.	REF DES	PART NUMBER	INDENT	DESCRIPTION	CAGE CODE	QTY PER ASSY	CODES SMR	CODES USABLE ON
	WG3 **	1213778−331	2	WAVEGUIDE ASSEMBLY, STRAIGHT	56232	1	PAOZZ	P
1−9	WG4	1213778−309	2	WAVEGUIDE ASSEMBLY, STRAIGHT	56232	1	PAOZZ	B D F
	WG4	1214938−301	2	WAVEGUIDE ASSEMBLY, 90 DEGREE ELBOW	56232	1	PAOZZ	A C E
	WG4 **	1213778−301	2	WAVEGUIDE ASSEMBLY, STRAIGHT	56232	1	PAOZZ	G
	WG4 **	1213778−312	2	WAVEGUIDE ASSEMBLY, STRAIGHT	56232	1	PAOZZ	K
	WG4 **	1223730−301	2	WAVEGUIDE ASSEMBLY	56232	1	PAOZZ	N
	WG4 **	1213680−301	2	WAVEGUIDE ASSEMBLY, 90 DEGREE ELBOW	56232	1	PAOZZ	P
1−10	WG5	1213778−320	2	WAVEGUIDE ASSEMBLY, STRAIGHT	56232	1	PAOZZ	A
	WG5	1214938−301	2	WAVEGUIDE ASSEMBLY, 90 DEGREE ELBOW	56232	1	PAOZZ	B D F H
	WG5 * **	1213778−317	2	WAVEGUIDE ASSEMBLY, STRAIGHT	56232	1	PAOZZ	C E
	WG5 **	1213778−316	2	WAVEGUIDE ASSEMBLY, STRAIGHT	56232	1	PAOZZ	K
	WG5 **	1213778−329	2	WAVEGUIDE ASSEMBLY, STRAIGHT	56232	1	PAOZZ	P
1−11	WG6	1213778−305	2	WAVEGUIDE ASSEMBLY, STRAIGHT	56232	1	PAOZZ	A
	WG6 *	1213778−317	2	WAVEGUIDE ASSEMBLY, STRAIGHT	56232	1	PAOZZ	B D F
	WG6	1213778−302	2	WAVEGUIDE ASSEMBLY, STRAIGHT	56232	1	PAOZZ	C E
	WG6 **	1214938−301	2	WAVEGUIDE ASSEMBLY, 90 DEGREE ELBOW	56232	1	PAOZZ	G
	WG6 **	1213778−310	2	WAVEGUIDE ASSEMBLY, STRAIGHT	56232	1	PAOZZ	H
	WG6 **	1213680−301	2	WAVEGUIDE ASSEMBLY, 90 DEGREE ELBOW	56232	1	PAOZZ	K P

NOTE * : SITE DEPENDENT
NOTE ** : NOT SHOWN
NOTE *** : CALL ROC HOTLINE FOR SITE SPECIFIC PART INFORMATION

FIGURE AND INDEX NO.	REF DES	PART NUMBER	INDENT	DESCRIPTION	CAGE CODE	QTY PER ASSY	CODES SMR	CODES USABLE ON
	WG6 **	1213778−317	2	WAVEGUIDE ASSEMBLY, STRAIGHT	56232	1	PAOZZ	N
1−12	WG7 **	TFT−86083	2	WAVEGUIDE ASSEMBLY, FLEXIBLE (56232) (spec dwg 1214841−202)	06351	1	PAOZZ	A N
	WG7	1213778−302	2	WAVEGUIDE ASSEMBLY, STRAIGHT	56232	1	PAOZZ	B C D E F
	WG7 **	1213778−310	2	WAVEGUIDE ASSEMBLY, STRAIGHT	56232	1	PAOZZ	G
	WG7 **	1213778−313	2	WAVEGUIDE ASSEMBLY, STRAIGHT	56232	1	PAOZZ	H K
	WG7 **	1213778−330	2	WAVEGUIDE ASSEMBLY, STRAIGHT	56232	1	PAOZZ	P
1−13	WG8 **	1213778−319	2	WAVEGUIDE ASSEMBLY, STRAIGHT	56232	1	PAOZZ	A N
	WG8 WG9	1213778−302	2	WAVEGUIDE ASSEMBLY, STRAIGHT	56232	2	PAOZZ	D E F
	WG8	1213778−306	2	WAVEGUIDE ASSEMBLY, STRAIGHT	56232	1	PAOZZ	B
	WG8	1213778−302	2	WAVEGUIDE ASSEMBLY, STRAIGHT	56232	1	PAOZZ	C
	WG8 **	1213778−313	2	WAVEGUIDE ASSEMBLY, STRAIGHT	56232	1	PAOZZ	G
	WG8 **	1214938−301	2	WAVEGUIDE ASSEMBLY, 90 DEGREE ELBOW	56232	1	PAOZZ	H K P
	WG9	TFT−86083	2	WAVEGUIDE ASSEMBLY, FLEXIBLE (56232) (spec dwg 1214841−202)	06351	1	PAOZZ	B
	WG9	1213778−306	2	WAVEGUIDE ASSEMBLY, STRAIGHT	56232	1	PAOZZ	C
	WG9 **	1214938−301	2	WAVEGUIDE ASSEMBLY, 90 DEGREE ELBOW	56232	1	PAOZZ	G
	WG9 **	1213777−305	2	WAVEGUIDE ASSEMBLY, TWIST	56232	1	PAOZZ	H
	WG9 **	1213777−303	2	WAVEGUIDE ASSEMBLY, TWIST	56232	1	PAOZZ	K

NOTE * : SITE DEPENDENT
NOTE ** : NOT SHOWN
NOTE *** : CALL ROC HOTLINE FOR SITE SPECIFIC PART INFORMATION

FIGURE AND INDEX NO.	REF DES	PART NUMBER	INDENT	DESCRIPTION	CAGE CODE	QTY PER ASSY	CODES SMR	CODES USABLE ON
	WG9 **	1213778−313	2	WAVEGUIDE ASSEMBLY, STRAIGHT	56232	1	PAOZZ	P
1−14	WG10	1213778−319	2	WAVEGUIDE ASSEMBLY, STRAIGHT	56232	1	PAOZZ	B
	WG10	TFT−86083	2	WAVEGUIDE ASSEMBLY, FLEXIBLE (56232) (spec dwg 1214841−202)	06351	1	PAOZZ	C
	WG10 WG11	1213778−302	2	WAVEGUIDE ASSEMBLY, STRAIGHT	56232	2	PAOZZ	D E F
	WG10	TFT−86077	2	WAVEGUIDE ASSEMBLY, FLEXIBLE (80006) (ALT PN 127353) (56232) (spec dwg 1213779−201)	06351	1	PAOZZ	H K
	WG10	1213777−305	2	WAVEGUIDE ASSEMBLY, TWIST	56232	1	PAOZZ	G
	WG11	1213778−319	2	WAVEGUIDE ASSEMBLY, STRAIGHT	56232	1	PAOZZ	C
	WG11 **	TFT−86077	2	WAVEGUIDE ASSEMBLY, FLEXIBLE (80006) (ALT PN 127353) (56232) (spec dwg 1213779−201)	06351	1	PAOZZ	G
	WG11 **	1213778−320	2	WAVEGUIDE ASSEMBLY, STRAIGHT	56232	1	PAOZZ	H K
	WG11 **	1213778−317	2	WAVEGUIDE ASSEMBLY, STRAIGHT	56232	1	PAOZZ	P
1−15	WG12	1213778−306	2	WAVEGUIDE ASSEMBLY, STRAIGHT	56232	1	PAOZZ	D
	WG12	1213778−302	2	WAVEGUIDE ASSEMBLY, STRAIGHT	56232	1	PAOZZ	E F
	WG12 **	1213778−320	2	WAVEGUIDE ASSEMBLY, STRAIGHT	56232	1	PAOZZ	G
	WG12 **	TFT−86083	2	WAVEGUIDE ASSEMBLY, FLEXIBLE (56232) (spec dwg 1214841−202)	06351	1	PAOZZ	P
	WG13	TFT−86083	2	WAVEGUIDE ASSEMBLY, FLEXIBLE (56232) (spec dwg 1214841−202)	06351	1	PAOZZ	D
	WG13	1213778−306	2	WAVEGUIDE ASSEMBLY, STRAIGHT	56232	1	PAOZZ	E
	WG13	1213778−302	2	WAVEGUIDE ASSEMBLY, STRAIGHT	56232	1	PAOZZ	F

NOTE * : SITE DEPENDENT
NOTE ** : NOT SHOWN
NOTE *** : CALL ROC HOTLINE FOR SITE SPECIFIC PART INFORMATION

FIGURE AND INDEX NO.	REF DES	PART NUMBER	INDENT	DESCRIPTION	CAGE CODE	QTY PER ASSY	CODES SMR	CODES USABLE ON
	WG13 **	1213778−319	2	WAVEGUIDE ASSEMBLY, STRAIGHT	56232	1	PAOZZ	P
1−16	WG14	1213778−319	2	WAVEGUIDE ASSEMBLY, STRAIGHT	56232	1	PAOZZ	D
	WG14	TFT−86083	2	WAVEGUIDE ASSEMBLY, FLEXIBLE (56232) (spec dwg 1214841−202)	06351	1	PAOZZ	E
	WG14 WG15	1213778−302	2	WAVEGUIDE ASSEMBLY, STRAIGHT	56232	2	PAOZZ	F
	WG15	1213778−319	2	WAVEGUIDE ASSEMBLY, STRAIGHT	56232	1	PAOZZ	E
1−17	WG16	1213778−306	2	WAVEGUIDE ASSEMBLY, STRAIGHT	56232	1	PAOZZ	F
1−18	WG17	TFT−86083	2	WAVEGUIDE ASSEMBLY, FLEXIBLE (56232) (spec dwg 1214841−202)	06351	1	PAOZZ	F
1−19	WG18	1213778−319	2	WAVEGUIDE ASSEMBLY, STRAIGHT	56232	1	PAOZZ	F
1−20	*	MS90064−17	2	PACKING, PREFORMED	96906	20	PCOZZ	
1−21	WG20	B1270E	2	SUPPORT, WAVEGUIDE BOOT (56232) (spec dwg 1217073−201)	29189	1	PCOZZ	
1−22	*	B537A	2	SUPPORT, WAVEGUIDE BOOT (56232) (spec dwg 1217073−202)	29189	4	PCOZZ	
1−23	WG21	B1302A	2	SUPPORT, WAVEGUIDE BOOT (56232) (spec dwg 1217073−203)	29189	1	PCOZZ	
1−24	WG22	B1303E	2	SUPPORT, WAVEGUIDE BOOT (56232) (spec dwg 1217073−204)	29189	2	PCOZZ	
1−25	**	7120−2X, A74−1	2	LADDER, EXTENSION, 20 FT. (56232) (spec dwg 1213877−201) MAINTENANCE ITEM, STORED ON RADOME DECK	90172	1	PEOZZ	
1−26	W3 * ** ***	1213460−XXX	2	CABLE ASSEMBLY	56232	1	PAFZZ	
1−27	W3P1 **	MS3406D28−9P	3	CONNECTOR	96906	1	PAOZZ	
1−28	W3P2 **	MS3406D28−9S	3	CONNECTOR	96906	1	PAOZZ	

NOTE * : SITE DEPENDENT
NOTE ** : NOT SHOWN
NOTE *** : CALL ROC HOTLINE FOR SITE SPECIFIC PART INFORMATION

FIGURE AND INDEX NO.	REF DES		PART NUMBER	INDENT	DESCRIPTION	CAGE CODE	QTY PER ASSY	CODES SMR	CODES USABLE ON
1−29		**	M85049/52−1−28W	3	CONNECTOR ACCESSORIES	81349	2	PAOZZ	
1−30		**	MS25036−149	3	TERMINAL LUG	96906	1	PAOZZ	
1−31	W4	* ** ***	1213461−XXX	2	CABLE ASSEMBLY	56232	1	PAFZZ	
1−32	W4P1	**	MS3406D36−10P	3	CONNECTOR	96906	1	PAOZZ	
1−33	W4P2	**	MS3406D36−10S	3	CONNECTOR	96906	1	PAOZZ	
1−34		**	M85049/52−1−36W	3	CONNECTOR ACCESSORIES	81349	2	PAOZZ	
1−35	W10	* ** ***	1213464−XXX	2	CABLE ASSEMBLY	56232	1	PAFZZ	
1−36	W10P1	* **	MS3406D28−21S	3	CONNECTOR	96906	1	PAOZZ	
	W10P1	* **	M24308/2−4	3	CONNECTOR	81349	1	PAOZZ	
1−37	W10P2	**	M24308/4−4	3	CONNECTOR	81349	1	PAOZZ	
1−38		**	M85049/52−1−28W	3	CONNECTOR ACCESSORIES	81349	1	PAOZZ	
1−39		* **	KDM001−37CA2JK	3	BACKSHELL, EMI/RFI, STRAIN RELIEF (31461) (ALT PN 901−307−18F) (56232) (spec dwg 1214498−218)	50619	1	PAOZZ	
		* **	17−1657−37	3	BACKSHELL, RFI/EMI (38250) (ALT PN C88000206) (56232) (spec dwg 1218764−204)	02660	1	PAOZZ	
1−40	W31	* ** ***	1213477−XXX	2	CABLE ASSEMBLY	56232	1	PAFZZ	
1−41	W31P1 W31P2	**	M24308/2−5	3	CONNECTOR	81349	2	PAOZZ	
1−42		* **	M85049/50−5	3	CONNECTOR ACCESSORIES	81349	1	PAOZZ	
1−43		* **	85062−04	3	CONNECTOR, LOCK	71468	1	PAOZZ	
1−44		* **	KDM001−50CA2JR	3	BACKSHELL, EMI/RFI, STRAIN RELIEF (31461) (ALT PN 901−307−22F) (56232) (spec dwg 1214498−222)	50619	1	PAOZZ	
		* **	17−1657−50	3	BACKSHELL, RFI/EMI (38250) (ALT PN C88000208) (56232) (spec dwg 1218764−205)	02660	1	PAOZZ	

NOTE * : SITE DEPENDENT
NOTE ** : NOT SHOWN
NOTE *** : CALL ROC HOTLINE FOR SITE SPECIFIC PART INFORMATION

FIGURE AND INDEX NO.	REF DES	PART NUMBER	INDENT	DESCRIPTION	CAGE CODE	QTY PER ASSY	CODES SMR	CODES USABLE ON
1−45	W53 **	1213591−304	2	CABLE ASSEMBLY	56232	1	PAOOO	O
1−46	W53P1 ** W53P2	L45R	3	CONNECTOR, COAXIAL, 7/8 IN. DIA FLANGE (56232) (spec dwg 1214567−202)	84147	2	PAOZZ	O
1−47	W54 **	1213591−310	2	CABLE ASSEMBLY	56232	1	PAOOO	O
1−48	W54P1 ** W54P2	L45R	3	CONNECTOR, COAXIAL, 7/8 IN. DIA FLANGE (56232) (spec dwg 1214567−202)	84147	2	PAOZZ	O
1−49	W55 * **	1213591−313	2	CABLE ASSEMBLY	56232	1	PAOOO	
1−50	W55P1 ** W55P2	L45R	3	CONNECTOR, COAXIAL, 7/8 IN. DIA FLANGE (56232) (spec dwg 1214567−202)	84147	2	PAOZZ	
1−51	W56 * **	1213591−314	2	CABLE ASSEMBLY	56232	1	PAOOO	
1−52	W56P1 ** W56P2	L45R	3	CONNECTOR, COAXIAL, 7/8 IN. DIA FLANGE (56232) (spec dwg 1214567−202)	84147	2	PAOZZ	
1−53	W110 * ** ***	1218221−XXX	2	CABLE ASSEMBLY	56232	1	PAFDD	
1−54	W110P1 * **	MS3406D28−15S	3	CONNECTOR	96906	1	PAOZZ	
1−55	W110P2 **	M24308/4−4	3	CONNECTOR	81349	1	PAOZZ	
1−56	* **	M85049/52−1−28W	3	CONNECTOR ACCESSORIES	81349	1	PAOZZ	
1−57	W131 * ** ***	1213477−XXX	2	CABLE ASSEMBLY	56232	1	PAFZZ	
1−58	W131P1 ** W131P2	M24308/2−5	3	CONNECTOR	81349	2	PAOZZ	
1−59	* **	M85049/50−5	3	CONNECTOR ACCESSORIES	81349	1	PAOZZ	
1−60	* **	85062−04	3	CONNECTOR	71468	1	PAOZZ	
1−61	**	17−1657−50	3	BACKSHELL, RFI (38250) (ALT PN C88000208) (56232) (spec dwg 1218764−205)	02660	1	PAOZZ	

NOTE * : SITE DEPENDENT
NOTE ** : NOT SHOWN
NOTE *** : CALL ROC HOTLINE FOR SITE SPECIFIC PART INFORMATION

FIGURE AND INDEX NO.	REF DES	PART NUMBER	INDENT	DESCRIPTION	CAGE CODE	QTY PER ASSY	CODES SMR	CODES USABLE ON
1−62	**	KDM001−50CA2JR	3	BACKSHELL, EMI/RFI, STRAIN RELIEF (31461) (ALT PN 901−307−22F) (56232) (spec dwg 1214498−222)	50619	1	PAOZZ	
1−63	W155 * **	1221798−309	2	CABLE ASSEMBLY	56232	1	PAOOO	NP
1−64	W155P1 W155P2 **	L45R	3	CONNECTOR, COAXIAL, 7/8 IN. DIA FLANGE (56232) (spec dwg 1214567−202)	84147	2	PAOZZ	NP
1−65	W156 **	1221798−310	2	CABLE ASSEMBLY	56232	1	PAOOO	NP
1−66	W156P1 W156P2 **	L45R	3	CONNECTOR, COAXIAL, 7/8 IN. DIA FLANGE (56232) (spec dwg 1214567−202)	84147	2	PAOZZ	NP
1−67		204989−2	2	GROUND STRAP KIT, SELF CLINCHING (56232) (spec dwg 1214548−201)	84147	6	PAOZZ	ABCDEF
1−68		1217823−301	2	GROUNDING CABLE, LPP SITES	56232	1	PAOOO	BCDEF
1−69	**	MS25036−120	3	TERMINAL LUG	96906	1	PAOZZ	BCDEF
1−70	**	MS25036−122	3	TERMINAL LUG	96906	1	PAOZZ	BCDEF
1−71		1217823−302	2	GROUNDING CABLE	56232	2	PAOOO	ABCDEF

NOTE * : SITE DEPENDENT
NOTE ** : NOT SHOWN
NOTE *** : CALL ROC HOTLINE FOR SITE SPECIFIC PART INFORMATION

FIGURE AND INDEX NO.	REF DES	PART NUMBER	INDENT	DESCRIPTION	CAGE CODE	QTY PER ASSY	CODES SMR	CODES USABLE ON
1−72	**	MS25036−120	3	TERMINAL LUG	96906	1	PAOZZ	A B C D E F
1−73	**	MS25036−122	3	TERMINAL LUG	96906	1	PAOZZ	A B C D E F
1−74	**	MS25036−120	3	TERMINAL LUG	96906	1	PAOZZ	A B C D E F N P
1−75	**	MS25036−122	3	TERMINAL LUG	96906	1	PAOZZ	A B C D E F N P
1−76	11MP3 **	1214550−204	2	SUPPORT, CUSHION	56232	AR	PAOZZ	
				(ATTACHING PARTS)				
		MS35691−19	2	NUT, HEX	96906	4	PAOZZ	
		MS35338−141	2	WASHER, LOCK	96906	1	PAOZZ	
		MS15795−814	2	WASHER, FLAT	96906	1	PAOZZ	
		NAS1454C6A−0600	2	STUD, CONTINUOUS THREAD	96906	6”	PAOZZ	
				− − − − − − − − −				
1−77	11MP5 **	B537	2	SUPPORT, CUSHION (56232) (spec dwg 1214550−201)	29189	AR	PAOZZ	
1−78	11MP6 **	B1264	2	SUPPORT, WAVEGUIDE CUSHION (56232) (spec dwg 1214551−201)	29189	AR	PAOZZ	

NOTE * : SITE DEPENDENT
NOTE ** : NOT SHOWN
NOTE *** : CALL ROC HOTLINE FOR SITE SPECIFIC PART INFORMATION

Section II. Maintenance Parts List

FIGURE AND INDEX NO.	REF DES	PART NUMBER	INDENT	DESCRIPTION	CAGE CODE	QTY PER ASSY	CODES	
							SMR	USABLE ON
		USABLE ON CODES A − RDA GROUP WITH 5 M TOWER B − RDA GROUP WITH 10 M TOWER C − RDA GROUP WITH 15 M TOWER D − RDA GROUP WITH 20 M TOWER E − RDA GROUP WITH 25 M TOWER F − RDA GROUP WITH 30 M TOWER G − TRAINING SITE, KEESLER AFB H − TRAINING SITE, KEESLER AFB J − DOD DEPOT K.C. BANNISTER K − NWS TRAINING SITE, K.C. L − NWS DEPOT, K.C. N − MISSOULA, MT O − NSSL P − MEDFORD, OR						
	NOTE * : SITE DEPENDENT NOTE ** : NOT SHOWN NOTE *** : CALL ROC HOTLINE FOR SITE SPECIFIC PART INFORMATION							

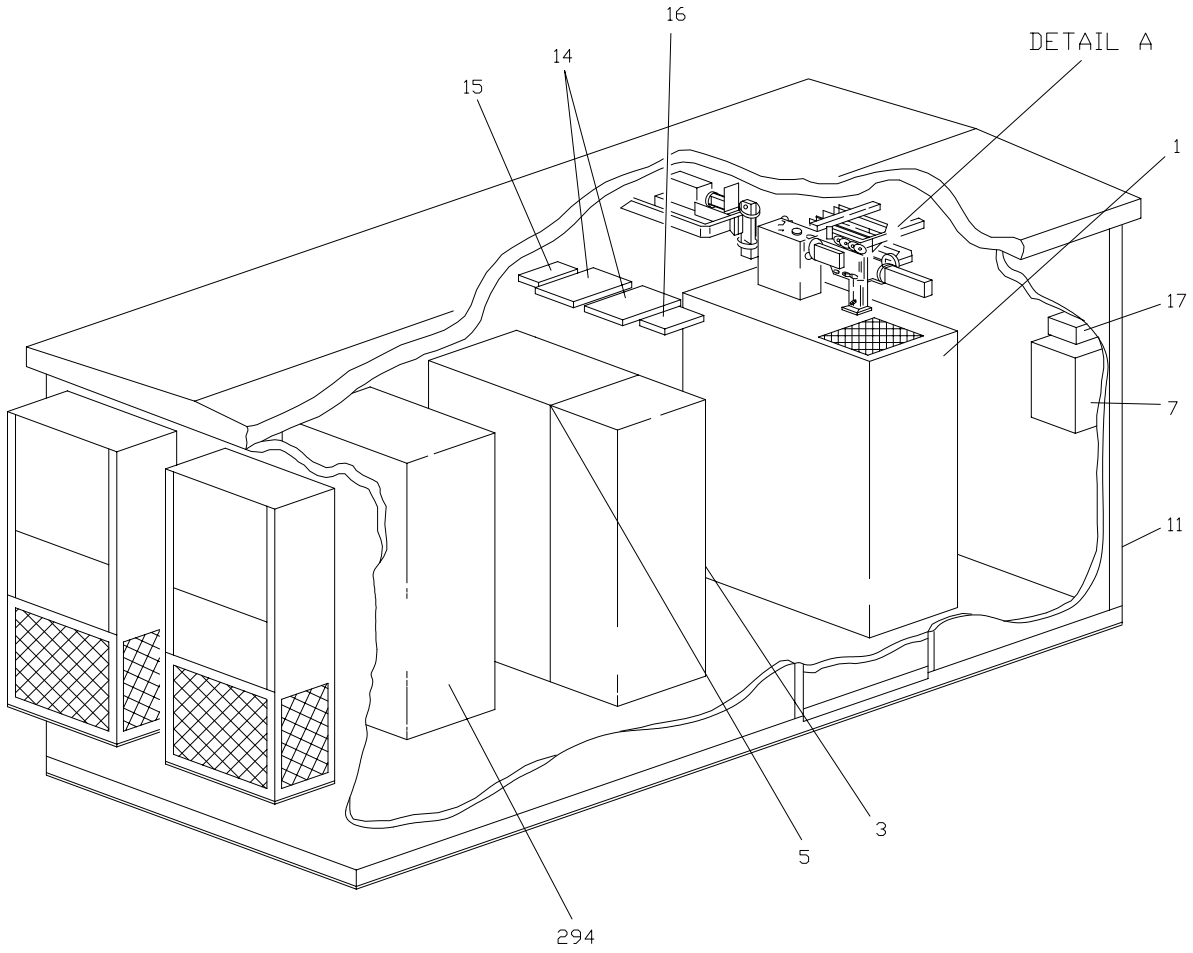

NX1115

FIGURE 2. Electrical Equipment Shelter, UD1 (Sheet 1 of 8)

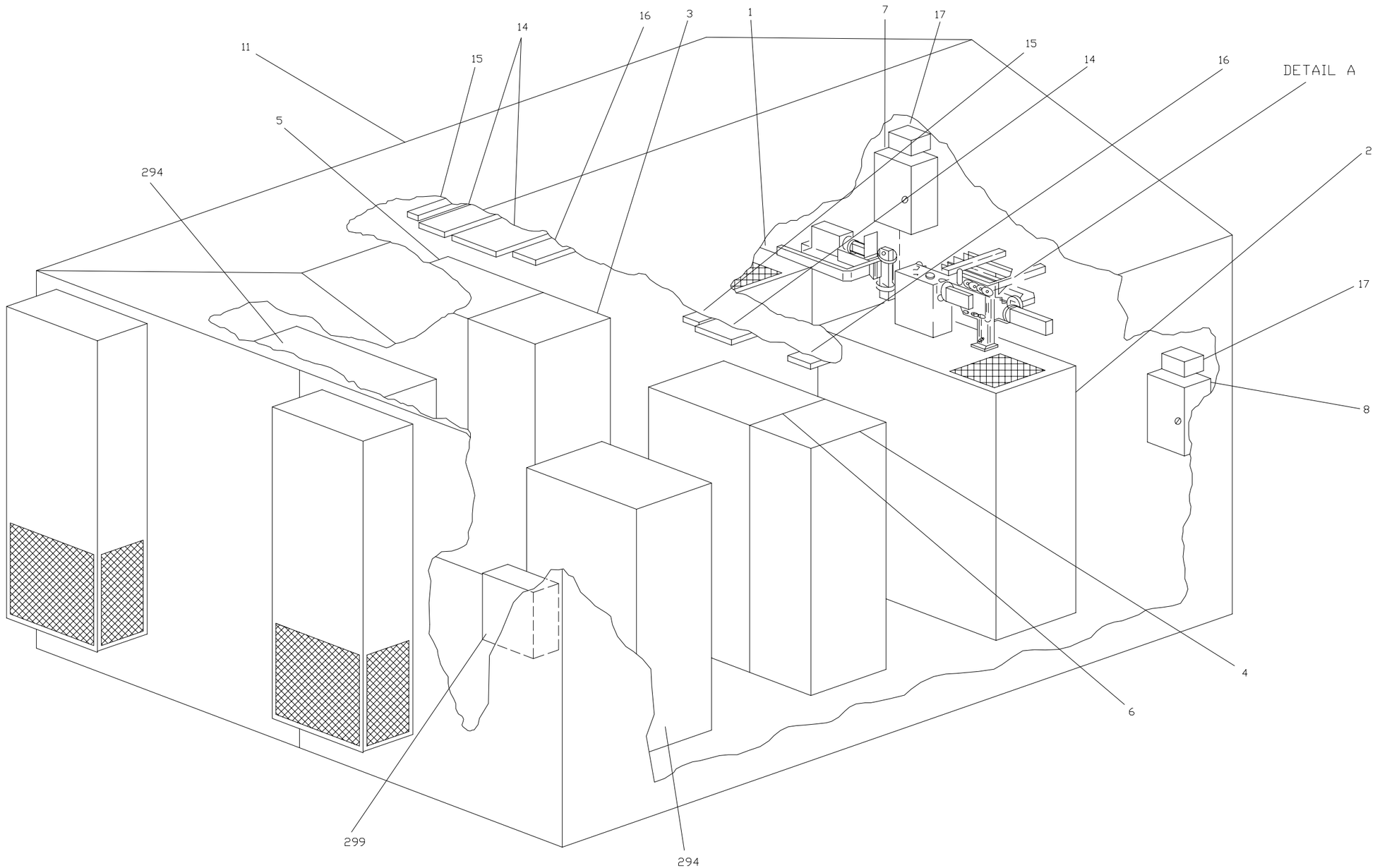

NX1116

FIGURE 2. Electrical Equipment Shelter, UD1 (Sheet 2 of 8)

NOTE 1:
SYSTEMS WITH BANDPASS FILTERS PN 2235−A−XXXX (INDEX NO. 2−34 AND 2−59) MUST HAVE TWO CHOKE FLANGE INSERTS PN 12467−037 IN THE FLANGE OF THE RF CIRCULATOR PN MA8H132−S006 OR PN 1213630−202 (INDEX NO. 2−33) AND IN THE FLANGE OF THE DIRECTIONAL CROSSGUIDE COUPLER PN 20732−P1 (INDEX NO. 2−27). THE CIRCULATOR AND THE COUPLER MATE WITH THE BANDPASS FILTER.

IF THE CHOKE FLANGE INSERTS ARE MISSING, ORDER CHOKE INSERT INSTALLATION KIT PN 2367−B05 (CAGE CODE 28916).

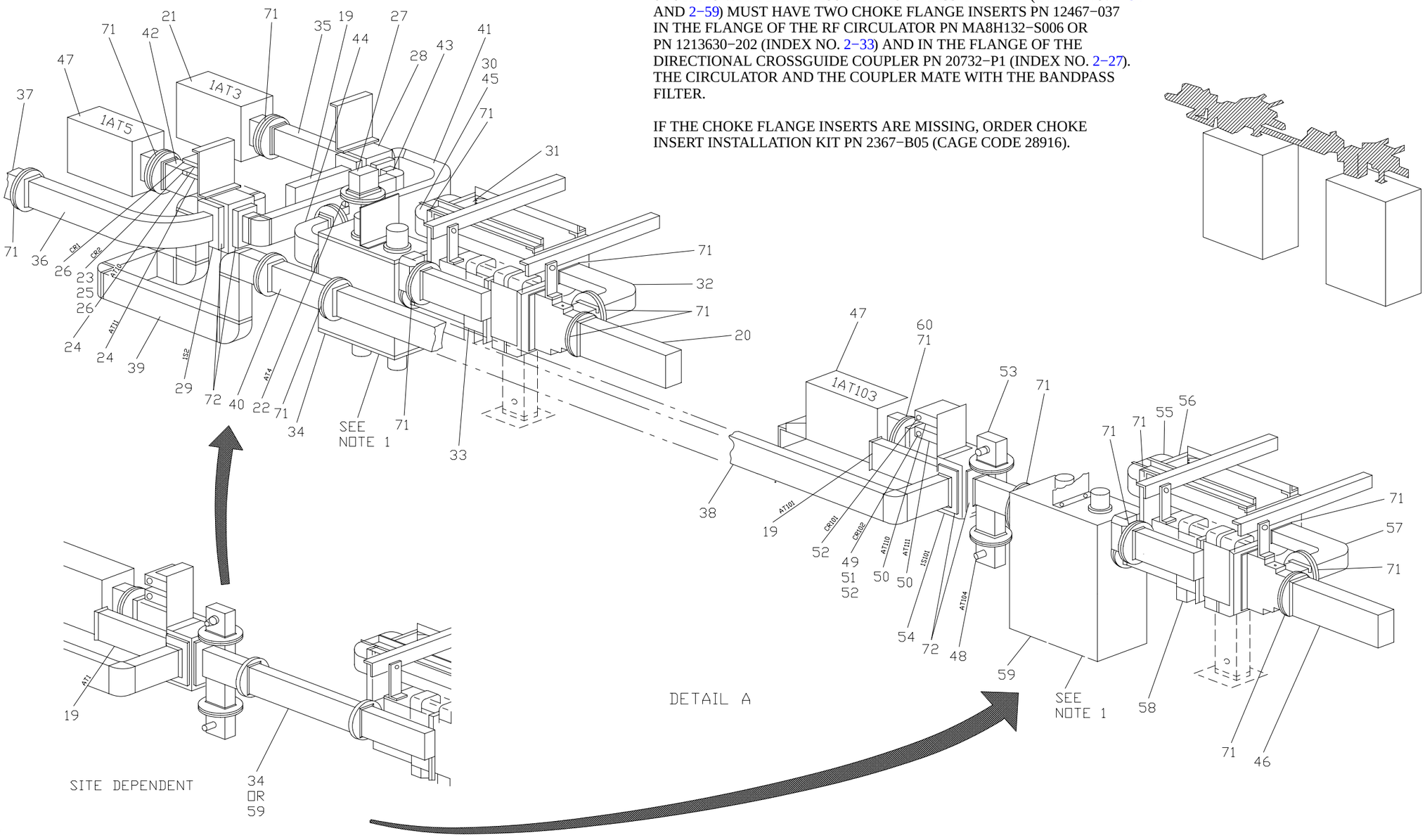

FIGURE 2. Electrical Equipment Shelter, UD1 (Sheet 3 of 8)

CABLE ASSEMBLIES (NOT SHOWN)

INDEX NO.	REF DES	FROM	TO	USABLE ON CODE
2−73	W5/105	P1(5J2)	P2(FL2)	
2−76	W7/107	P1(5J24) P1(105J24)	P2(FL3) P2(FL103)	C,H
2−80	W8/108	P1(5J1) P1(105J1)	P2(FL1) P2(FL101)	C,H
2−83	W9/109−303	P1(70/170FL1J1)	208VAC/3PHASE	B,C
2−85	W11	P1(4J7)	P2(5J9)	A,B,D
2−89	W12/112	P1(4J26) P1(104J26)	P2(FL4) P2(FL104)	C,H
2−93	W13	P1(5J11)	1A25 LOAD	A
2−98	W15/115	P1(4J7) P1(104J7)	P2(5J13) P2(105J13)	C,H C,H
2−103	W17/117	P1(4J20) P1(104J20)	P2(5J21) P2(105J21)	C,H
2−107	W19/119	P1(S1J1) P1(S101J1)	P2(5J10) P2(105J10)	C,H
2−112	W20	P1(3J3) P1(103J3)	P2(5J7) P2(105J7)	C,H
2−116	W21/121	P1(3J2) P1(103J2)	P2(5J8) P2(105J8)	C,H
2−119	W22/122	P1(4J23) P1(104J23)	P2(5J18) P2(105J18)	C,H
2−122	W23/123	P1(5J19) P1(105J19)	P2(4J21) P2(104J21)	C,H
2−126	W24/124	P1(4J22) P1(104J22)	P2(5J20) P2(105J20)	C,H
2−130	W25/125	P1(3J1) P1(103J1)	P2(5J22) P2(105J22)	C,H
2−134	W26/126	P1(4J24) P1(104J24)	P2(5J23) P2(105J23)	C,H
2−138	W30	P1(5J6)	P2(7A1J1)	
2−142	W32/132	P1(6TB2) P1(106TB2)	P2(7A1TB2) P2(107A1TB2)	A,B,C,D,E,F,G
2−144	W35	1AT2	7/107A1	A,B,C,D,E,F
2−146	W36/136−301	P1(70/170J19)	P2(5/105J11)	B,C,E,F
2−147	W37	P1(5J11)	1A26 LOAD	D
2−152	*W40	P1(5J11)	P2(19J1)	A,H
2−157	*W44−304	P1(70J1)	P2(LEASED LINE)	B
2−158	*W44	P1(31J14)	P2(TB2−LEASED LINES)	C
2−163	*W45	P1(70J2)	P2(DIAL LINE)	B

* SITE DEPENDENT

FIGURE 2. Electrical Equipment Shelter, UD 1 (Sheet 4 of 8)

CABLE ASSEMBLIES (NOT SHOWN)

INDEX NO.	REF DES	FROM	TO	USABLE ON CODE
2−164	*W45−308	P1(31J15)	P2(TB1−DIAL LINES)	C
2−168	W46	P1(70J3)	P2(LEASED LINE−2)	B
2−169	W46−309	P1(31J16)	P2(TB4−LEASED LINES)	C
2−170	W53	P1(2W5P1)	P2(W55P2)	E,F
2−172	W54	P1(2W6P1)	P2(W56P2)	E
2−174	W55	P1(4J16)	P2(W53P2)	A,B,C,D,G,H
2−177	W56	P1(4J15)	P2(W54P2)	A,B,C,D,G,H
2−181	*W57/157	P1(AT10) P1(AT110)	P2(WG12J2) P2(WG112J2)	C,H
2−182	*W57	P1(AT10)	P2(WG12J2)	C,H
2−183	W58/158	P1(AT11) P1(AT111)	P2(3DC1J1) P2(103DC1J1)	C,H
2−184	W59/159	P1(3J4) P1(103J4)	P2(4J19) P2(104J19)	A,B,C,D,E,F,H
2−186	W60/160	P1(3J5) P1(103J5)	P2(4J17) P2(104J17)	A,B,C,D,E,F,H
2−188	W61/161	P1(AT4) P1(AT104)	P2(4J18) P2(104J18)	A,B,C,D,E,F,H
2−190	W62	P1(S1J1)	P2(5J10)	C,H
2−196	*W63	P1(5J11)	(A28)	A,D,H
2−200	*W64	P1(TELCO)	(A28)	A,D,H
2−202	*W65/165	P1(5J29) P1(105J29)	(RDAJ−BOX) (RDAJ−BOX)	H H
2−206	W74/174	P1(3J7) P1(103J7)	P2(5J17) P2(105J17)	A,B,C,D,E,F,G,H
2−208	W75/175	P1(3J6) P1(103J6)	P2(AT9) P2(BNC−TEE)	C,H
2−211	W76/176	P1(CR1) P1(CR101)	P2(CR2−TEE) P2(CR102−TEE)	C,H
2−213	W88	P1(FL5−OUT) P1(FL105−OUT)	P2(6TB1) P2(106TB1)	C,H
2−216	W95/195	P1(70/170J17)	P2(5/105J25)	B,C
2−217	W95/195−302	P1(70/170J17)	P2(5/105J25)	G
2−218	W100	P1(105J12)	P2(5J12)	C,H
2−221	W130	P1(5J6)	P2(7A1J2)	C,H
2−225	W155	P1(104J16)	P2(W153P2)	C,H
2−227	*W156	P1(104J15)	P2(W154P2)	C,H
2−229	W162−301	P1(70J1)	P2(31J3)	C
2−230	W162−1	P1(70J1)	P2(31J3)	G

* SITE DEPENDENT

FIGURE 2. Electrical Equipment Shelter, UD 1 (Sheet 5 of 8)

CABLE ASSEMBLIES (NOT SHOWN)

INDEX NO.	REF DES	FROM	TO	USABLE ON CODE
2−231	W163−302	P1(70J2)	P2(31J4)	C
2−232	W163−1	P1(70J2)	P2(31J4)	G
2−233	W164−303	P1(70J3)	P2(31J5)	C
2−234	W166−301	P1(70J12)	P2(31J21)	C,G
2−236	W168−301	P1(70J22)	P2(31J1)	C
2−238	W169−304	P1(170J1)	P2(31J8)	C
2−239	W169−1	P1(170J1)	P2(31J8)	G
2−240	W170−305	P1(170J2)	P2(31J9)	C
2−241	W170−1	P1(170J2)	P2(31J9)	G
2−242	W171	P1(170J3)	P2(31J10)	C
2−243	W173−302	P1(170J12)	P2(31J23)	C,G
2−245	W178−302	P1(170J22)	P2(31J2)	C
2−247	W181	P1(105J11)	P2(TB2−DIAL LINES)	H
2−252	W182	P1(5J27)	P2(105J27)	H
2−256	W183	P1(5J26)	P2(105J26)	H
2−260	W184	P1(5J15)	P2(105J15)	C,H
2−264	W185	P1(5J28)	P2(105J28)	H
2−268	*	E1(3/103E1)	E2(1E4)	
2−271	*	E1(4/104E1)	E2(1E1)	
2−273	*	E1(5/105E1)	E2(1E3)	
2−275	*	E1(W55P2/W155P2)	E2(W56P2/W156P2)	
2−277	*	E1(W55P2/W155P2)	E2(1E3)	
2−280		E1(W/G FLANGE)	E2(1E2)	
2−283		E1(70/170E1)	E2(1E4)	B,C
2−285		E1(18GND)	E2(1E4)	D
2−288		E1(A25/A26E1)	E2(1E1)	A
2−291		E1(31E1)	E2(1E1)	C

* SITE DEPENDENT

FIGURE 2. Electrical Equipment Shelter, UD1 (Sheet 6 of 8)

PART NUMBERS AND FREQUENCIES

INDEX NO.	REF DES	FREQUENCY	PREMIER PART NO. (28916)	LOCKHEED MARTIN PART NO. (56232)
2−34	1WG6	2705	2235−A−2705	1213656−201
		2707	2235−A−2707	1213656−251
		2710	2235−A−2710	1213656−202
		2720	2235−A−2720	1213656−205
		2725	2235−A−2725	1213656−206
		2730	2235−A−2730	1213656−207
		2740	2235−A−2740	1213656−260
		2745	2235−A−2745	1213656−253
		2768	2235−A−2768	1213656−213
		2770	2235−A−2770	1213656−214
		2800	2235−A−2800	1213656−220
		2805	2235−A−2805	1213656−222
		2820	2235−A−2820	1213656−254
		2850	2235−A−2850	1213656−230
		2855	2235−A−2855	1213656−231
		2865	2235−A−2865	1213656−233
		2870	2235−A−2870	1213656−234
		2875	2235−A−2875	1213656−235
		2880	2235−A−2880	1213656−236
		2885	2235−A−2885	1213656−238
		2886	2235−A−2886	1213656−239
		2890	2235−A−2890	1213656−242
		2895	2235−A−2895	1213656−252
		2896	2235−A−2896	1213656−250
		2905	2235−A−2905	1213656−255
		2910	2235−A−2910	1213656−256
		2922	2235−A−2922	1213656−259
		2934	2235−A−2934	1213656−264
		2950	2235−A−2950	1213656−261
		2993	2235−A−2993	1213656−262
		2995	2235−A−2995	1213656−249

FIGURE 2. Electrical Equipment Shelter, UD1 (Sheet 7 of 8)

PART NUMBERS AND FREQUENCIES

INDEX NO.	REF DES	FREQUENCY	PREMIER PART NO. (28916)	LOCKHEED MARTIN PART NO. (56232)
2−59	1WG106	2705	2235−A−2705	1213656−201
		2707	2235−A−2707	1213656−251
		2710	2235−A−2710	1213656−202
		2720	2235−A−2720	1213656−205
		2725	2235−A−2725	1213656−206
		2730	2235−A−2730	1213656−207
		2740	2235−A−2740	1213656−260
		2745	2235−A−2745	1213656−253
		2768	2235−A−2768	1213656−213
		2770	2235−A−2770	1213656−214
		2800	2235−A−2800	1213656−220
		2805	2235−A−2805	1213656−222
		2820	2235−A−2820	1213656−254
		2850	2235−A−2850	1213656−230
		2855	2235−A−2855	1213656−231
		2865	2235−A−2865	1213656−233
		2870	2235−A−2870	1213656−234
		2875	2235−A−2875	1213656−235
		2880	2235−A−2880	1213656−236
		2885	2235−A−2885	1213656−238
		2886	2235−A−2886	1213656−239
		2890	2235−A−2890	1213656−242
		2895	2235−A−2895	1213656−252
		2896	2235−A−2896	1213656−250
		2905	2235−A−2905	1213656−255
		2910	2235−A−2910	1213656−256
		2922	2235−A−2922	1213656−259
		2934	2235−A−2934	1213656−264
		2950	2235−A−2950	1213656−261
		2993	2235−A−2993	1213656−262
		2995	2235−A−2995	1213656−249

FIGURE 2. Electrical Equipment Shelter, UD1 (Sheet 8 of 8)

FIGURE AND INDEX NO.	REF DES	PART NUMBER	INDENT	DESCRIPTION	CAGE CODE	QTY PER ASSY	CODES SMR	CODES USABLE ON
2−	1 *	1213758−XXX	1	SHELTER, RDA, ELECTRICAL EQUIPMENT (For NHA see FIGURE 1 on Page 2 − 1)	56232	REF	XB	A
	1 *	1215206−XXX	1	SHELTER, RDA/RPG, ELECTRICAL EQUIPMENT (For NHA see FIGURE 1 on Page 2 − 1)	56232	REF	XB	B
	1 *	1215207−XXX	1	SHELTER, RDA/RPG (COLLOCATED) REDUNDANT, ELECTRICAL EQUIPMENT (For NHA see FIGURE 1 on Page 2 − 1)	56232	REF	XB	C
	1 *	1221207−XXX	1	SHELTER ASSEMBLY, RDA, 24 FOOT (For NHA see FIGURE 1 on Page 2 − 1)	56232	REF	XB	D
	1 *	1222344−XXX	1	SHELTER ASSEMBLY, RDA, REDUNDANT (For NHA see FIGURE 1 on Page 2 − 1)	56232	REF	XB	H
2−1	3	2500003−301	2	TRANSMITTER, RADAR, HIGH RELIABILITY (Replaces (97942) (PN 1D28370G01)) (For breakdown see FIGURE 13 on Page 2 − 123)	0WY55	1	PBFDD	
2−2	103	2500003−301	2	TRANSMITTER, RADAR, HIGH RELIABILITY (Replaces (97942) (PN 1D28370G01)) (For breakdown see FIGURE 13 on Page 2 − 123)	0WY55	1	PBFDD	C H
				(ATTACHING PARTS)				
		MS35307−360	2	SCREW	96906	16	PAOZZ	
		MS35338−141	2	WASHER	96906	16	PAOZZ	
		MS15795−814	2	WASHER	96906	16	PAOZZ	
				− − − − − − − − −				
2−3	4 *	1525325−XXX	2	RECEIVER, RADAR (For breakdown see FIGURE 17 on Page 2 − 172)	56232	1	PBFDD	
2−4	104 *	1525325−XXX	2	RECEIVER, RADAR (For breakdown see FIGURE 17 on Page 2 − 172)	56232	1	PBFDD	C H
2−5	5 *	1214778−XXX	2	RDA DATA PROCESSOR (For breakdown see FIGURE 20 on Page 2 − 207)	56232	1	PBFDD	A B D
	NOTE * : SITE DEPENDENT NOTE ** : NOT SHOWN							

FIGURE AND INDEX NO.	REF DES	PART NUMBER	INDENT	DESCRIPTION	CAGE CODE	QTY PER ASSY	CODES SMR	CODES USABLE ON
	5 *	1221821−XXX	2	RDA DATA PROCESSOR (For breakdown see FIGURE 20 on Page 2 − 207)	56232	1	PBFDD	A B C D H
2−6	105 *	1221821−XXX	2	RDA DATA PROCESSOR (For breakdown see FIGURE 20 on Page 2 − 207)	56232	1	PBFDD	C H
2−7	6D *	40327	2	PRESSURIZATION UNIT, WAVEGUIDE, DUAL OUTLET, MODEL HA−4X2 (56232) (source ctrl dwg 1217035−201) (For breakdown see FIGURE 32 on Page 2 − 285)	08441	1	PAODD	
	6 *	19331	2	PRESSURIZATION UNIT WAVEGUIDE, MODEL HA−4 (56232) (source ctrl dwg 1213660−201) (For breakdown see FIGURE 31 on Page 2 − 282)	08441	1	PAODD	
2−8	106D *	40327	2	PRESSURIZATION UNIT, WAVEGUIDE, DUAL OUTLET, MODEL HA−4X2 (56232) (source ctrl dwg 1217035−201) (For breakdown see FIGURE 32 on Page 2 − 285)	08441	1	PAODD	
	106 *	19331	2	PRESSURIZATION UNIT WAVEGUIDE, MODEL HA−4 (56232) (source ctrl dwg 1213660−201) (For breakdown see FIGURE 31 on Page 2 − 282)	08441	1	PAODD	
2−9	6CP1 * **	30182−4−4C	2	ADAPTER, STRAIGHT, PIPE TO HOSE (11649) (ALT PN SS−4−MHC−4S) (56232) (spec dwg 1217025−201)	50948	4	PAOZZ	
2−10	106CP2 * **	30182−2−4C	2	ADAPTER, STRAIGHT, PIPE TO HOSE (11649) (ALT PN SS−2−MHC−4S) (56232) (spec dwg 1217025−202)	50948	8	PAOZZ	
2−11	7 *	D−1296	2	SHELTER (For breakdown see FIGURE 33 on Page 2 − 289)	0E2J5	1	XB	A

NOTE * : SITE DEPENDENT

NOTE ** : NOT SHOWN

FIGURE AND INDEX NO.	REF DES	PART NUMBER	INDENT	DESCRIPTION	CAGE CODE	QTY PER ASSY	CODES SMR	CODES USABLE ON
	7 *	D−1172	2	SHELTER (For breakdown see FIGURE 33 on Page 2 − 289)	0E2J5	1	XB	B
	7 *	D−1437	2	SHELTER, REDUNDANT RDA/RPG (COLLOCATED) (For breakdown see FIGURE 33 on Page 2 − 289)	0E2J5	1	XB	C
	7 *	D−1974	2	SHELTER (For breakdown see FIGURE 33 on Page 2 − 289)	0E2J5	1	XB	D
	7	D−2241	2	SHELTER, REDUNDANT (For breakdown see FIGURE 33 on Page 2 − 289)	0E2J5	1	XB	H
2−12	7MP1 **	93K7AB15D−STK−626−RH	3	KNOB, DOOR, SHELTER	70019	1	PAOZZ	
2−13	7MS1 **	11364	3	WEATHER STRIP, SHELTER	0E2J5	AR	PAOZZ	
2−14	1FL1/101 1FL2/102	FA60−2051	2	FILTER, BANDPASS (13619) (ALT PN RF13219) (56232) (spec dwg 1214490−201)	81831	2	PAOLD	A
				(ATTACHING PARTS)				
		MS16998−41	2	SCREW	96906	8	PAOZZ	
		MS35338−139	2	WASHER	96906	8	PAOZZ	
		AN960C416L	2	WASHER	88044	8	PAOZZ	
				− − − − − − − − −				
	1FL1/101 1FL2/102	FA60−2051	2	FILTER, BANDPASS (13619) (ALT PN RF13219) (56232) (spec dwg 1214490−201)	81831	3	PAOLD	H
				(ATTACHING PARTS)				
		MS16998−41	2	SCREW	96906	12	PAOZZ	
		MS35338−139	2	WASHER	96906	12	PAOZZ	
		AN960C416L	2	WASHER	88044	12	PAOZZ	
				− − − − − − − − −				
2−15	1FL3/103	FA60−2055	2	FILTER, BANDPASS (13619) (ALT PN RF13229) (56232) (spec dwg 1214918−201)	81831	1	PAOLD	A
				(ATTACHING PARTS)				
		MS16998−41	2	SCREW	96906	4	PAOZZ	
		MS35338−139	2	WASHER	96906	4	PAOZZ	
		AN960C416L	2	WASHER	88044	4	PAOZZ	
				− − − − − − − − −				
	NOTE * : SITE DEPENDENT NOTE ** : NOT SHOWN							

FIGURE AND INDEX NO.	REF DES	PART NUMBER	INDENT	DESCRIPTION	CAGE CODE	QTY PER ASSY	CODES SMR	CODES USABLE ON
	1FL3/103	FA60−2055	2	FILTER, BANDPASS (13619) (ALT PN RF13229) (56232) (spec dwg 1214918−201)	81831	2	PAOLD	H
				(ATTACHING PARTS)				
		MS16998−41	2	SCREW	96906	4	PAOZZ	
		MS35338−139	2	WASHER	96906	4	PAOZZ	
		AN960C416L	2	WASHER	88044	4	PAOZZ	
				− − − − − − − − −				
2−16	1FL4/104	FA60−2052	2	FILTER, BANDPASS (13619) (ALT PN RF13230) (56232) (spec dwg 1214919−201)	81831	1	PAOLD	A
				(ATTACHING PARTS)				
		MS51957−43	2	SCREW	96906	4	PAOZZ	
		MS35338−137	2	WASHER	96906	4	PAOZZ	
		MS15795−807	2	WASHER	96906	4	PAOZZ	
				− − − − − − − − −				
	1FL4/104	FA60−2052	2	FILTER, BANDPASS (13619) (ALT PN RF13230) (56232) (spec dwg 1214919−201)	81831	2	PAOLD	H
				(ATTACHING PARTS)				
		MS51957−43	2	SCREW	96906	4	PAOZZ	
		MS35338−137	2	WASHER	96906	4	PAOZZ	
		MS15795−807	2	WASHER	96906	4	PAOZZ	
				− − − − − − − − −				
2−17	1FL5/105	FA60−2053	2	FILTER, BANDPASS (13619) (ALT PN RF13219) (56232) (spec dwg 1214920−201)	81831	1	PAOLD	A
	1FL5/105	FA60−2052	2	FILTER, BANDPASS (13619) (ALT PN RF13219) (56232) (spec dwg 1214920−201)	81831	2	PAOLD	H
				(ATTACHING PARTS)				
		MS16998−41	2	SCREW	96906	8	PAOZZ	
		MS35338−139	2	WASHER	96906	8	PAOZZ	
		AN960C416L	2	WASHER	88044	8	PAOZZ	
				− − − − − − − − −				
2−18	1FL6 **	4L121−3500/T15000−NP/N	2	FILTER, LOWPASS	033F8	1	PAOZZ	

NOTE * : SITE DEPENDENT
NOTE ** : NOT SHOWN

FIGURE AND INDEX NO.	REF DES	PART NUMBER	INDENT	DESCRIPTION	CAGE CODE	QTY PER ASSY	CODES SMR	CODES USABLE ON
2−19	1AT1	20728−P1	2	DUMMY LOAD, ELECTRICAL WAVEGUIDE, LOW POWER (56232) (spec dwg 1213659−202)	00443	1	PAOZZ	
	1AT101	20728−P1	2	DUMMY LOAD, ELECTRICAL WAVEGUIDE, LOW POWER (56232) (spec dwg 1213659−202)	00443	1	PAOZZ	C H
				(ATTACHING PARTS)				
		MS16995−51	2	SCREW	96906	10	PAOZZ	
		AN960C416L	2	WASHER	88044	10	PAOZZ	
		MS35338−139	2	WASHER	96906	10	PAOZZ	
				− − − − − − − − −				
2−20	1AT2	20733	2	DUMMY LOAD, ELECTRICAL WAVEGUIDE, MEDIUM POWER (56232) (spec dwg 1213626−201)	00443	1	PAOZZ	
				(ATTACHING PARTS)				
		MS16995−51	2	SCREW	96906	8	PAOZZ	
		MS35338−139	2	WASHER	96906	8	PAOZZ	
		AN960C416L	2	WASHER	88044	8	PAOZZ	
				− − − − − − − − −				
2−21	1AT3	20729	2	DUMMY LOAD, ELECTRICAL WAVEGUIDE, HIGH POWER (56232) (spec dwg 1213658−201)	00443	1	PAOZZ	
				(ATTACHING PARTS)				
		MS16995−50	2	SCREW	96906	2	PAOZZ	
		MS16997−61	2	SCREW	96906	8	PAOZZ	
		MS35338−139	2	WASHER	96906	8	PAOZZ	
		AN960C416L	2	WASHER	88044	10	PAOZZ	
		MS15795−810	2	WASHER	96906	4	PAOZZ	
		MS16228−4C	2	NUT	96906	2	PAOZZ	
				− − − − − − − − −				
2−22	1AT4	M3933/10−2	2	ATTENUATOR, COAXIAL	81349	1	PAOZZ	
2−23	1AT9 *	011−0049−01	2	TERMINATION, COAXIAL FEED−THRU, BNC (61162) (ALT PN 50L−2) (56232) (spec dwg 1218206−201)	80009	1	PAOZZ	

NOTE * : SITE DEPENDENT
NOTE ** : NOT SHOWN

FIGURE AND INDEX NO.	REF DES	PART NUMBER	INDENT	DESCRIPTION	CAGE CODE	QTY PER ASSY	CODES SMR	CODES USABLE ON
2−24	1AT10 1AT11	50CA3.6−1395	2	ATTENUATOR (09992) (ALT PN AR4390) (56232) (spec dwg 1218186−201)	52750	2	PAOZZ	
				(ATTACHING PARTS)				
		MS51957−28	2	SCREW	96906	6	PAOZZ	
		MS35338−136	2	WASHER	96906	6	PAOZZ	
		MS15795−805	2	WASHER	96906	6	PAOZZ	
				− − − − − − − − −				
2−25		M55339/17−00001	2	ADAPTER	81349	1	PAOZZ	
2−26	1CR1 1CR2	8472B(OPTION 003)	2	DETECTOR, RF (21847) (ALT PN 1700D0600−01) (56232) (spec dwg 1214768−202)	28480	2	PAOZZ	
2−27	1DC1	20732−P1	2	COUPLER, DIRECTIONAL CROSSGUIDE (56232) (spec dwg 1213631−202)	00443	1	PAOLD	
				(ATTACHING PARTS)				
		MS16995−52	2	SCREW	96906	8	PAOZZ	
		MS35338−139	2	WASHER	96906	8	PAOZZ	
		AN960C416L	2	WASHER	88044	8	PAOZZ	
		MS35649−2254	2	NUT	96906	8	PAOZZ	
				− − − − − − − − −				
2−28	1S1	SM2−641	2	WAVEGUIDE SWITCH (56232) (spec dwg 1213657−201)	53263	1	PAOLD	
2−29	1S2	SM2−641	2	WAVEGUIDE SWITCH (56232) (spec dwg 1213657−201)	53263	1	PAOLD	C H
				(ATTACHING PARTS)				
		MS16995−50	2	SCREW	96906	4	PAOZZ	
		MS15795−810	2	WASHER	96906	8	PAOZZ	
		MS16228−4C	2	NUT	96906	4	PAOZZ	
				− − − − − − − − −				
2−30	1WG1	1526834−301	2	WAVEGUIDE ASSEMBLY, TRANSMITTER	56232	1	PAOZZ	
				(ATTACHING PARTS)				
		MS16995−50	2	SCREW	96906	8	PAOZZ	
		MS16995−53	2	SCREW	96906	10	PAOZZ	
	NOTE * : SITE DEPENDENT NOTE ** : NOT SHOWN							

FIGURE AND INDEX NO.	REF DES	PART NUMBER	INDENT	DESCRIPTION	CAGE CODE	QTY PER ASSY	CODES SMR	CODES USABLE ON
		MS35338−139	2	WASHER	96906	18	PAOZZ	
		AN960C416L	2	WASHER	88044	18	PAOZZ	
		MS35649−2254	2	NUT	96906	10	PAOZZ	
				− − − − − − − − −				
2−31	1WG2	2237−A−00	2	FILTER, HARMONIC WAVEGUIDE, BANDPASS (56232) (spec dwg 1213632−201)	28916	1	PAOLD	
				(ATTACHING PARTS)				
		MS16995−51	2	SCREW	96906	8	PAOZZ	
		MS35338−139	2	WASHER	96906	8	PAOZZ	
		AN960C416L	2	WASHER	88044	8	PAOZZ	
				− − − − − − − − −				
2−32	1WG3	1213776−301	2	WAVEGUIDE ASSEMBLY, HARMONIC FILTER	56232	1	PAOZZ	
				(ATTACHING PARTS)				
		MS16995−50	2	SCREW	96906	8	PAOZZ	
		MS16995−52	2	SCREW	96906	8	PAOZZ	
		MS35338−139	2	WASHER	96906	16	PAOZZ	
		AN960C416L	2	WASHER	88044	16	PAOZZ	
		MS35649−2254	2	NUT	96906	8	PAOZZ	
				− − − − − − − − −				
2−33	1WG4 *	MA8H132−S006	2	CIRCULATOR, RF (28916) (ALT PN 2367−A−00) (56232) (spec dwg 1213630−201) (When exhausted replace with 1213630−202)	96341	1	PAOLD	
	1WG4 *	1213630−202	2	CIRCULATOR, RF (28916) (ALT PN 2367−A−01) (56232) (spec dwg 1213630−202)	96341	1	PAOLD	
				(ATTACHING PARTS)				
		MS16995−51	2	SCREW	96906	8	PAOZZ	
		MS35338−139	2	WASHER	96906	8	PAOZZ	
		AN960C416L	2	WASHER	88044	8	PAOZZ	
				− − − − − − − − −				
	NOTE * : SITE DEPENDENT							
	NOTE ** : NOT SHOWN							

FIGURE AND INDEX NO.	REF DES	PART NUMBER	INDENT	DESCRIPTION	CAGE CODE	QTY PER ASSY	CODES SMR	CODES USABLE ON
2−34	1WG6 *	2235−A−XXXX	2	FILTER, BANDPASS, WAVEGUIDE (56232) (spec dwg 1213656−XXX) (Frequency specific, refer to FIGURE 2 Sheet 7)	28916	1	PAOLD	
	1WG6 *	1526801−301	2	WAVEGUIDE ASSEMBLY	56232	1	PAOZZ	
				(ATTACHING PARTS)				
		MS16995−52	2	SCREW	96906	8	PAOZZ	
		MS35338−139	2	WASHER	96906	8	PAOZZ	
		AN960C416L	2	WASHER	88044	8	PAOZZ	
		MS35649−2254	2	NUT	96906	8	PAOZZ	
				− − − − − − − − −				
2−35	1WG7	1216497−301	2	WAVEGUIDE ASSEMBLY	56232	1	PAOZZ	
				(ATTACHING PARTS)				
		MS16995−51	2	SCREW	96906	10	PAOZZ	
		MS35338−139	2	WASHER	96906	10	PAOZZ	
		AN960C416L	2	WASHER	88044	10	PAOZZ	
				− − − − − − − − −				
2−36	1WG10	TFT−86081	2	WAVEGUIDE ASSEMBLY, FLEXIBLE, W/G SWITCH (80006) (ALT PN 126715) (56232) (spec dwg 1213779−202)	06351	1	PAOZZ	A B C D G H
	1WG10	TFT−86077	2	WAVEGUIDE ASSEMBLY, FLEXIBLE (80006) (ALT PN 127353) (56232) (spec dwg 1213779−201)	06351	1	PAOZZ	E F
				(ATTACHING PARTS)				
		MS16995−51	2	SCREW	96906	10	PAOZZ	
		MS35338−139	2	WASHER	96906	8	PAOZZ	
				− − − − − − − − −				
2−37	1WG11	1213778−310	2	WAVEGUIDE ASSEMBLY, STRAIGHT	56232	1	PAOZZ	A B C D E G H

NOTE * : SITE DEPENDENT
NOTE ** : NOT SHOWN

FIGURE AND INDEX NO.	REF DES	PART NUMBER	INDENT	DESCRIPTION	CAGE CODE	QTY PER ASSY	CODES SMR	CODES USABLE ON
	1WG11	1213778−301	2	WAVEGUIDE ASSEMBLY, STRAIGHT	56232	1	PAOZZ	F
				(ATTACHING PARTS)				
		MS16995−51	2	SCREW	96906	8	PAOZZ	
		MS35338−139	2	WASHER	96906	8	PAOZZ	
		AN960C416L	2	WASHER	88044	8	PAOZZ	
				− − − − − − − − −				
2−38	1WG13	1217086−301	2	WAVEGUIDE ASSEMBLY, REDUNDANT TRANSMITTER	56232	1	PAOZZ	C H
				(ATTACHING PARTS)				
		MS16995−51	2	SCREW	96906	10	PAOZZ	
		MS16995−50	2	SCREW	96906	10	PAOZZ	
		MS35338−139	2	WASHER	96906	18	PAOZZ	
		AN960C416L	2	WASHER	88044	18	PAOZZ	
				− − − − − − − − −				
2−39	1WG12	1217087−301	2	WAVEGUIDE ASSEMBLY	56232	1	PAOZZ	C H
				(ATTACHING PARTS)				
		MS16995−50	2	SCREW	96906	10	PAOZZ	
		MS35338−139	2	WASHER	96906	10	PAOZZ	
		AN960C416L	2	WASHER	88044	10	PAOZZ	
				− − − − − − − − −				
2−40	1WG14 *	1526801−302	2	WAVEGUIDE ASSEMBLY, STRAIGHT	56232	1	PAOZZ	C H
				(ATTACHING PARTS)				
		MS16995−51	2	SCREW	96906	8	PAOZZ	
		MS35338−139	2	WASHER	96906	8	PAOZZ	
		AN960C416L	2	WASHER	88044	8	PAOZZ	
				− − − − − − − − −				
2−41	1WG15	1223733−301	2	WAVEGUIDE ASSEMBLY	56232	1	PAOZZ	C H
				(ATTACHING PARTS)				
		MS16995−53	2	SCREW	96906	10	PAOZZ	
		MS16995−51	2	SCREW	96906	10	PAOZZ	
		AN960C416L	2	WASHER	88044	20	PAOZZ	
	NOTE * : SITE DEPENDENT NOTE ** : NOT SHOWN							

FIGURE AND INDEX NO.	REF DES	PART NUMBER	INDENT	DESCRIPTION	CAGE CODE	QTY PER ASSY	CODES SMR	CODES USABLE ON
		MS35338−139	2	WASHER	96906	20	PAOZZ	
				− − − − − − − − −				
2−42	1WG16	1223734−301	2	WAVEGUIDE ASSEMBLY	56232	1	PAOZZ	C H
				(ATTACHING PARTS)				
		MS16995−51	2	SCREW	96906	8	PAOZZ	
		AN960C416L	2	WASHER	88044	8	PAOZZ	
		MS35338−139	2	WASHER	96906	8	PAOZZ	
				− − − − − − − − −				
2−43	1WG17	1223735−301	2	WAVEGUIDE ASSEMBLY	56232	1	PAOZZ	C H
				(ATTACHING PARTS)				
		MS16995−51	2	SCREW	96906	10	PAOZZ	
		AN960C416L	2	WASHER	88044	10	PAOZZ	
		MS35338−139	2	WASHER	96906	10	PAOZZ	
				− − − − − − − − −				
2−44	1WG18 *	1223736−301	2	WAVEGUIDE ASSEMBLY, 90 DEGREE ELBOW	56232	1	PAOZZ	C H
	1WG18 *	1223736−302	2	WAVEGUIDE ASSEMBLY, 90 DEGREE ELBOW	56232	1	PAOZZ	
				(ATTACHING PARTS)				
		MS16995−51	2	SCREW	96906	8	PAOZZ	
		MS16995−52	2	SCREW	96906	8	PAOZZ	
		MS35649−2254	2	NUT	96906	8	PAOZZ	
		MS51848−50	2	WASHER, LOCK	96906	8	PAOZZ	
		MS35338−139	2	WASHER	96906	8	PAOZZ	
		AN960C416L	2	WASHER	88044	8	PAOZZ	
				− − − − − − − − −				
2−45	1WG19	1223755−301	2	WAVEGUIDE ASSEMBLY	56232	1	PAOZZ	C H
				(ATTACHING PARTS)				
		MS16995−50	2	SCREW	96906	8	PAOZZ	
		MS35338−139	2	WASHER	96906	8	PAOZZ	
		AN960C416L	2	WASHER	88044	8	PAOZZ	
				− − − − − − − − −				
	NOTE * : SITE DEPENDENT							
	NOTE ** : NOT SHOWN							

FIGURE AND INDEX NO.	REF DES	PART NUMBER	INDENT	DESCRIPTION	CAGE CODE	QTY PER ASSY	CODES SMR	CODES USABLE ON
2−46	1AT102	20733	2	DUMMY LOAD, ELECTRICAL WAVEGUIDE, MEDIUM POWER (56232) (spec dwg 1213626−201)	00443	1	PAOZZ	C H
				(ATTACHING PARTS)				
		MS16995−51	2	SCREW	96906	8	PAOZZ	
		MS35338−139	2	WASHER	96906	8	PAOZZ	
		AN960C416L	2	WASHER	88044	8	PAOZZ	
				− − − − − − − − −				
2−47	1AT103 1AT5	20729	2	DUMMY LOAD, ELECTRICAL WAVEGUIDE, HIGH POWER (56232) (spec dwg 1213658−201)	00443	2	PAOZZ	C H
				(ATTACHING PARTS)				
		MS16995−50	2	SCREW	96906	4	PAOZZ	
		MS16997−61	2	SCREW	96906	16	PAOZZ	
		AN960C416L	2	WASHER	88044	20	PAOZZ	
		MS35338−139	2	WASHER	96906	16	PAOZZ	
		MS16228−4C	2	NUT	96906	4	PAOZZ	
				− − − − − − − − −				
2−48	1AT104	M3933/10−2	2	ATTENUATOR, COAXIAL	81349	1	PAOZZ	C H
2−49	1AT109	011−0049−01	2	TERMINATION, COAXIAL FEED−THRU, BNC (61162) (ALT PN 50L−2) (56232) (spec dwg 1218206−201)	80009	1	PAOZZ	C H
2−50	1AT110 1AT111	50CA3.6−1395	2	ATTENUATOR (09992) (ALT PN AR4390) (56232) (spec dwg 1218186−201)	52750	2	PAOZZ	C H
				(ATTACHING PARTS)				
		MS51957−28	2	SCREW	96906	6	PAOZZ	
		MS35338−136	2	WASHER	96906	6	PAOZZ	
		MS15795−805	2	WASHER	96906	6	PAOZZ	
				− − − − − − − − −				
2−51		M55339/17−00001	2	ADAPTER	81349	1	PAOZZ	C H
2−52	1CR101 1CR102	8472B(OPTION 003)	2	DETECTOR, RF (21847) (ALT PN 1700D0600−01) (56232) (spec dwg 1214768−202)	28480	2	PAOZZ	C H
	NOTE * : SITE DEPENDENT NOTE ** : NOT SHOWN							

FIGURE AND INDEX NO.	REF DES	PART NUMBER	INDENT	DESCRIPTION	CAGE CODE	QTY PER ASSY	CODES SMR	CODES USABLE ON
2−53	1DC101	20732−P1	2	COUPLER, DIRECTIONAL CROSSGUIDE (56232) (spec dwg 1213631−202)	00443	1	PAOLD	C H
				(ATTACHING PARTS)				
		MS16995−52	2	SCREW	96906	8	PAOZZ	
		MS35338−139	2	WASHER	96906	8	PAOZZ	
		AN960C416L	2	WASHER	88044	8	PAOZZ	
		MS35649−2254	2	NUT	96906	8	PAOZZ	
				− − − − − − − − −				
2−54	1S101 1S2	SM2−641	2	WAVEGUIDE SWITCH (56232) (spec dwg 1213657−201)	53263	1	PAOLD	C H
				(ATTACHING PARTS)				
		MS16995−50	2	SCREW	96906	8	PAOZZ	
		MS35338−139	2	WASHER	96906	8	PAOZZ	
				− − − − − − − − −				
2−55	1WG101	1526834−301	2	WAVEGUIDE ASSEMBLY, TRANSMITTER	56232	1	PAOZZ	C H
	1WG101	1223754−301	2	WAVEGUIDE ASSEMBLY, TRANSMITTER	56232	1	PAOZZ	C H
				(ATTACHING PARTS)				
		MS16995−51	2	SCREW	96906	8	PAOZZ	
		MS35338−139	2	WASHER	96909	8	PAOZZ	
		AN960C416L	2	WASHER	88044	8	PAOZZ	
				− − − − − − − − −				
2−56	1WG102	2237−A−00	2	FILTER, HARMONIC WAVEGUIDE, BANDPASS (56232) (spec dwg 1213632−201)	28916	1	PAOLD	C H
				(ATTACHING PARTS)				
		MS16995−51	2	SCREW	96906	8	PAOZZ	
		MS35338−139	2	WASHER	96906	8	PAOZZ	
		AN960C416L	2	WASHER	88044	8	PAOZZ	
				− − − − − − − − −				
2−57	1WG103	1213776−301	2	WAVEGUIDE ASSEMBLY, ELBOW	56232	1	PAOZZ	C H
				(ATTACHING PARTS)				
		MS16995−51	2	SCREW	96906	8	PAOZZ	

NOTE * : SITE DEPENDENT
NOTE ** : NOT SHOWN

FIGURE AND INDEX NO.	REF DES	PART NUMBER	INDENT	DESCRIPTION	CAGE CODE	QTY PER ASSY	CODES SMR	CODES USABLE ON
		MS35338−139	2	WASHER	96906	8	PAOZZ	
		AN960C416L	2	WASHER	88044	8	PAOZZ	
				− − − − − − − − −				
2−58	1WG104	MA8H132−S006	2	CIRCULATOR, RF (28916) (ALT PN 2367−A−00) (56232) (spec dwg 1213630−201) (When exhausted replace with 1213630−202)	96341	1	PAOLD	C H
				(ATTACHING PARTS)				
		MS16995−51	2	SCREW	96906	8	PAOZZ	
		MS35338−139	2	WASHER	96906	8	PAOZZ	
		AN960C416L	2	WASHER	88044	8	PAOZZ	
				− − − − − − − − −				
2−59	1WG106 *	2235−A−XXXX	2	FILTER, BANDPASS, WAVEGUIDE (56232) (spec dwg 1213656−XXX) (Frequency specific, refer to FIGURE 2 Sheet 8)	28916	1	PAOLD	C H
	1WG106 *	1526801−301	2	WAVEGUIDE ASSEMBLY	56232	1	PAOZZ	C H
				(ATTACHING PARTS)				
		MS16995−52	2	SCREW	96906	16	PAOZZ	
		MS35338−139	2	WASHER	96906	16	PAOZZ	
		AN960C416L	2	WASHER	88044	16	PAOZZ	
		MS35649−2254	2	NUT	96906	16	PAOZZ	
		MS51848−50	2	WASHER, LOCK	96906	16	PAOZZ	
				− − − − − − − − −				
2−60	1WG107	1216497−301	2	WAVEGUIDE ASSEMBLY	56232	1	PAOZZ	C H J K
				(ATTACHING PARTS)				
		MS16995−50	2	SCREW	96906	8	PAOZZ	
		MS35338−139	2	WASHER	96906	8	PAOZZ	
		AN960C416L	2	WASHER	88044	8	PAOZZ	
				− − − − − − − − −				
2−61	1WG109 **	1223729−302	2	WAVEGUIDE ASSEMBLY	56232	1	PAOZZ	J
2−62	1WG108 **	1223729−301	2	WAVEGUIDE ASSEMBLY	56232	1	PAOZZ	K
	NOTE * : SITE DEPENDENT							
	NOTE ** : NOT SHOWN							

FIGURE AND INDEX NO.	REF DES		PART NUMBER	INDENT	DESCRIPTION	CAGE CODE	QTY PER ASSY	CODES SMR	CODES USABLE ON
2−63		**	TFT−86083	2	WAVEGUIDE ASSEMBLY, FLEXIBLE (56232) (spec dwg 1214841−202)	06351	1	PAOZZ	J K
2−64		**	1213778−308	2	WAVEGUIDE ASSEMBLY, STRAIGHT	56232	1	PAOZZ	J K
2−65	WG3	**	1213778−331	2	WAVEGUIDE ASSEMBLY, STRAIGHT	56232	1	PAOZZ	J
2−66		**	1213680−301	2	WAVEGUIDE ASSEMBLY, 90 DEGREE ELBOW	56232	1	PAOZZ	J
2−67	1WG5	**	1213778−329	2	WAVEGUIDE ASSEMBLY	56232	1	PAOZZ	J
2−68	1WG7	**	1213778−330	2	WAVEGUIDE ASSEMBLY	56232	1	PAOZZ	J
2−69		**	1214938−301	2	WAVEGUIDE ASSEMBLY, 90 DEGREE ELBOW	56232	1	PAOZZ	J
2−70	1WG8	**	1223730−301	2	WAVEGUIDE ASSEMBLY	56232	1	PAOZZ	K
2−71			MS90064−17	2	PACKING, PREFORMED	96906	8	PCOZZ	A B
			MS90064−17	2	PACKING, PREFORMED	96906	20	PCOZZ	C H
2−72			M24211/2−005	2	GASKET	81349	5	PAOZZ	A B
			M24211/2−005	2	GASKET	81349	15	PAOZZ	C H
2−73	W5/105	**	1213462−301	2	CABLE ASSEMBLY	56232	1	PAOOO	
2−74	W5/105P1	**	MS3406D24−10S	3	CONNECTOR	96906	1	PAOZZ	
2−75		**	MS25036−157	3	TERMINAL LUG	96906	5	PAOZZ	
2−76	W7/107	**	1214793−301	2	CABLE ASSEMBLY	56232	1	PAOOO	
2−77	W7/107P1	**	MS3406D24−10S	3	CONNECTOR	96906	1	PAOZZ	
2−78		**	MS25036−157	3	TERMINAL LUG	96906	1	PAOZZ	
2−79		**	MS25036−112	3	TERMINAL LUG	96906	3	PAOZZ	
2−80	W8/108	**	1213463−301	2	CABLE ASSEMBLY	56232	1	PAOOO	
2−81	W8/108P1	**	MS3406D24−10S	3	CONNECTOR	96906	1	PAOZZ	
2−82		**	MS25036−157	3	TERMINAL LUG	96906	5	PAOZZ	
2−83	W9/109−303	**	2320041−303	2	CABLE ASSEMBLY, 73”	0WY55	1	PAOZZ	B C
2−84	W9/109P1	**	MS3408D24−10S	3	CONNECTOR	96906	1	PAOZZ	
2−85	W11	**	1213465−301	2	CABLE ASSEMBLY	56232	1	PAOOO	A B D

NOTE * : SITE DEPENDENT
NOTE ** : NOT SHOWN

FIGURE AND INDEX NO.	REF DES		PART NUMBER	INDENT	DESCRIPTION	CAGE CODE	QTY PER ASSY	CODES SMR	CODES USABLE ON
2−86	W11P1	**	M24308/2−14	3	CONNECTOR	81349	1	PAOZZ	A B D
2−87	W11P2	**	M24308/2−4	3	CONNECTOR	81349	1	PAOZZ	A B D
2−88		**	CTO1965−2JL	3	BACKSHELL ASSEMBLY, EMI/RFI, STRAIN RELIEF (56232) (spec dwg 1217032−242)	50619	2	PAOZZ	A B D
2−89	W12/112	**	1213466−301	2	CABLE ASSEMBLY	56232	1	PAOOO	
2−90	W12/112P1	**	MS3406D24−10S	3	CONNECTOR	96906	1	PAOZZ	
2−91		**	MS25036−157	3	TERMINAL LUG	96906	1	PAOZZ	
2−92		**	MS25036−112	3	TERMINAL LUG	96906	2	PAOZZ	
2−93	W13	* **	1219651−301	2	CABLE ASSEMBLY	56232	1	PAOOO	A
2−94	W13P1	**	DAU−15SF0	3	CONNECTOR, RECEPTACLE, ELECTRICAL (56232) (spec dwg 1218767−202)	71468	1	PAOZZ	A
2−95		**	030−1953−000	3	CONTACT, SOCKET, ELECTRICAL (56232) (spec dwg 1218765−201)	71468	4	PAOZZ	A
2−96		**	17−1657−15	3	BACKSHELL, D−SUB, RFI/EMI (38250) (ALT PN C88000207) (56232) (spec dwg 1218764−202)	02660	1	PAOZZ	A
2−97		**	MS25036−101	3	TERMINAL LUG	96906	6	PAOZZ	A
2−98	W15/115	* **	1217789−301	2	CABLE ASSEMBLY	56232	1	PAOOO	C H
2−99	W15/115P1	**	M24308/2−14	3	CONNECTOR	81349	1	PAOZZ	C H
2−100	W15/115P2	**	M24308/2−5	3	CONNECTOR	81349	1	PAOZZ	C H
2−101		**	CTO1965−2JL	3	BACKSHELL ASSEMBLY, EMI/RFI, STRAIN RELIEF (56232) (spec dwg 1217032−242)	50619	1	PAOZZ	C H
2−102		**	CTO1949−2JR	3	BACKSHELL ASSEMBLY, EMI/RFI, STRAIN RELIEF (56232) (spec dwg 1217032−252)	50619	1	PAOZZ	C H

NOTE * : SITE DEPENDENT
NOTE ** : NOT SHOWN

FIGURE AND INDEX NO.	REF DES		PART NUMBER	INDENT	DESCRIPTION	CAGE CODE	QTY PER ASSY	CODES SMR	CODES USABLE ON
2−103	W17/117	* **	1213468−301	2	CABLE ASSEMBLY	56232	1	PAOOO	
2−104	W17/117P1	**	M24308/2−4	3	CONNECTOR	81349	1	PAOZZ	
2−105	W17/117P2	**	M24308/4−4	3	CONNECTOR	81349	1	PAOZZ	
2−106		**	CTO1965−2JL	3	BACKSHELL ASSEMBLY, EMI/RFI, STRAIN RELIEF (56232) (spec dwg 1217032−242)	50619	2	PAOZZ	
2−107	W19/119	* **	1213469−301	2	CABLE ASSEMBLY	56232	1	PAOOO	A B C D H
	W19	* **	1213469−302	2	CABLE ASSEMBLY	56232	1	PAOOO	E F
	W19	* **	1213469−303	2	CABLE ASSEMBLY	56232	1	PAOOO	G
2−108	W19/119P1	**	MS3476W14−12S	3	CONNECTOR	96906	1	PAOZZ	
2−109	W19/119P2		M24308/4−2	3	CONNECTOR	81349	1	PAOZZ	
2−110			M85049/52−1−14W	3	CONNECTOR ACCESSORIES	81349	1	PAOZZ	
2−111			KDM001−15CA2JG	3	BACKSHELL, EMI/RFI, STRAIN RELIEF (31461) (ALT PN 901−307−10F) (56232) (spec dwg 1214498−210)	50619	1	PAOZZ	
2−112		* **	1213470−301	2	CABLE ASSEMBLY	56232	1	PAOOO	A B C D H
	W20	* **	1213470−302	2	CABLE ASSEMBLY	56232	1	PAOOO	E F
	W20	**	1213470−303	2	CABLE ASSEMBLY	56232	1	PAOOO	G
2−113	W20/120P1 W20/120P2	**	M24308/2−4	3	CONNECTOR	81349	2	PAOZZ	
2−114		**	KDM001−37CA2JG	3	BACKSHELL, EMI/RFI, STRAIN RELIEF (31461) (ALT PN 901−307−39F) (56232) (spec dwg 1214498−239)	50619	1	PAOZZ	
2−115		**	CTO2159−2JG	3	BACKSHELL ASSEMBLY, EMI/RFI, MODIFIED (56232) (spec dwg 1214924−206)	50619	1	PAOZZ	

NOTE * : SITE DEPENDENT

NOTE ** : NOT SHOWN

FIGURE AND INDEX NO.	REF DES	PART NUMBER	INDENT	DESCRIPTION	CAGE CODE	QTY PER ASSY	CODES SMR	CODES USABLE ON
2−116	W21/121 **	1213471−301	2	CABLE ASSEMBLY	56232	1	PAOOO	A B C D H
	W21 * **	1213471−302	2	CABLE ASSEMBLY	56232	1	PAOOO	E F
	W21 * **	1213471−303	2	CABLE ASSEMBLY	56232	1	PAOOO	G
2−117	W21/121P1 ** W21/121P2	M24308/4−4	3	CONNECTOR	81349	2	PAOZZ	
2−118		CTO1965−2JL	3	BACKSHELL ASSEMBLY, EMI/RFI, STRAIN RELIEF (56232) (spec dwg 1217032−242)	50619	2	PAOZZ	
2−119	W22/122 * **	1213472−301	2	CABLE ASSEMBLY	56232	1	PAOOO	
2−120	W22/122P1 W22/122P2	M24308/4−4	3	CONNECTOR	81349	2	PAOZZ	
2−121	**	CTO1965−2JL	3	BACKSHELL ASSEMBLY, EMI/RFI, STRAIN RELIEF (56232) (spec dwg 1217032−242)	50619	2	PAOZZ	
2−122	W23/123 * **	1213473−301	2	CABLE ASSEMBLY	56232	1	PAOOO	
2−123	W23/123P1 **	M24308/4−4	3	CONNECTOR	81349	1	PAOZZ	
2−124	W23/123P2 **	M24308/2−4	3	CONNECTOR	81349	1	PAOZZ	
2−125	**	CTO1965−2JL	3	BACKSHELL ASSEMBLY, EMI/RFI, STRAIN RELIEF (56232) (spec dwg 1217032−242)	50619	2	PAOZZ	
2−126	W24/124 * **	1213474−301	2	CABLE ASSEMBLY	56232	1	PAOOO	
2−127	W24/124P1 **	M24308/4−4	3	CONNECTOR	81349	1	PAOZZ	
2−128	W24/124P2 **	M24308/2−4	3	CONNECTOR	81349	1	PAOZZ	
2−129	**	CTO1965−2JL	3	BACKSHELL ASSEMBLY, EMI/RFI, STRAIN RELIEF (56232) (spec dwg 1217032−242)	50619	2	PAOZZ	
2−130	W25/125 * **	1213475−301	2	CABLE ASSEMBLY	56232	1	PAOOO	

NOTE * : SITE DEPENDENT
NOTE ** : NOT SHOWN

FIGURE AND INDEX NO.	REF DES		PART NUMBER	INDENT	DESCRIPTION	CAGE CODE	QTY PER ASSY	CODES SMR	CODES USABLE ON
2−131	W25/125P1 W25/125P2	**	M24308/2−4	3	CONNECTOR	81349	2	PAOZZ	
2−132		**	CTO1965−2JL	3	BACKSHELL ASSEMBLY, EMI/RFI, STRAIN RELIEF (56232) (spec dwg 1217032−242)	50619	1	PAOZZ	
2−133		**	CTO2158−2JL	3	BACKSHELL ASSEMBLY, EMI/RFI, MODIFIED (56232) (spec dwg 1214924−205)	50619	1	PAOZZ	
2−134	W26/126	* **	1213526−301	2	CABLE ASSEMBLY	56232	1	PAOOO	
2−135	W26/126P1	**	M24308/2−3	3	CONNECTOR	81349	1	PAOZZ	
2−136	W26/126P2	**	M24308/4−3	3	CONNECTOR	81349	1	PAOZZ	
2−137		**	KDM001−25CA2JF	3	BACKSHELL, EMI/RFI, STRAIN RELIEF (31461) (ALT PN 901−307−14F) (56232) (spec dwg 1214498−214)	50619	2	PAOZZ	
2−138	W30	**	1213476−301	2	CABLE ASSEMBLY	56232	1	PAOOO	A B C D H
	W30	**	1213476−303	2	CABLE ASSEMBLY	56232	1	PAOOO	E F
	W30	**	1213476−304	2	CABLE ASSEMBLY	56232	1	PAOOO	G
	W30	**	1213476−305	2	CABLE ASSEMBLY	56232	1	PAOOO	J K
2−139	W30P1 W30P2	**	M24308/2−5	3	CONNECTOR	81349	2	PAOZZ	
2−140		**	KDM001−50CA2JR	3	BACKSHELL, EMI/RFI, STRAIN RELIEF (31461) (ALT PN 901−307−22F) (56232) (spec dwg 1214498−222)	50619	1	PAOZZ	
2−141		**	KDM001−50CA5J	3	BACKSHELL, EMI/RFI, STRAIN RELIEF (31461) (ALT PN 901−307−33F) (56232) (spec dwg 1214498−233)	50619	1	PAOZZ	
2−142	W32	**	1213934−301	2	CABLE ASSEMBLY	56232	1	PAOOO	A B C D

NOTE * : SITE DEPENDENT

NOTE ** : NOT SHOWN

FIGURE AND INDEX NO.	REF DES		PART NUMBER	INDENT	DESCRIPTION	CAGE CODE	QTY PER ASSY	CODES SMR	CODES USABLE ON
	W132	**	1213934−302	2	CABLE ASSEMBLY	56232	1	PAOOO	E F
	W32/132	**	1213934−303	2	CABLE ASSEMBLY	56232	1	PAOOO	G
2−143		**	MS17143−4	3	TERMINAL LUG	96906	2	PAOZZ	
2−144	W35	**	1213935−301	2	CABLE ASSEMBLY	56232	1	PAOOO	A B C D
	W35	**	1213935−303	2	CABLE ASSEMBLY	56232	1	PAOOO	E F
2−145		**	MS17143−4	3	TERMINAL LUG	96906	3	PAOZZ	A B C D E F
2−146	W36/136−301	**	2320072−301	2	CABLE ASSEMBLY, 240”	0WY55	1	PAOZZ	B C E F
2−147	W37	**	1224060−301	2	CABLE ASSEMBLY	56232	1	PAOOO	D
2−148	W37P1	**	DAU−15SF0	3	CONNECTOR, ELECTRICAL, PLUG (56232) (spec dwg 1218767−202)	71468	1	PAOZZ	A D
2−149		**	MS25036−101	3	TERMINAL LUG	96906	5	PAOZZ	A D
2−150		**	17−1657−15	3	BACKSHELL, D−SUB, RFI/EMI (38250) (ALT PN C88000207) (56232) (spec dwg 1218764−202)	02660	1	PAOZZ	A D
2−151		**	030−1953−000	3	CONTACT, SOCKET, ELECTRICAL (56232) (spec dwg 1218765−201)	71468	4	PAOZZ	A D
2−152	W40	* **	1217041−303	2	CABLE ASSEMBLY	56232	1	PAOOO	A
	W40	* **	1217041−305	2	CABLE ASSEMBLY	56232	1	PAOOO	H
2−153	W40P1	**	M24308/2−2	3	CONNECTOR	81349	1	PAOZZ	A H
2−154	W40P2	**	D38999/26WA35PN	3	CONNECTOR	81349	1	PAOZZ	A H

NOTE * : SITE DEPENDENT
NOTE ** : NOT SHOWN

FIGURE AND INDEX NO.	REF DES		PART NUMBER	INDENT	DESCRIPTION	CAGE CODE	QTY PER ASSY	CODES SMR	CODES USABLE ON
2−155		**	M85049/39−9A	3	CONNECTOR ACCESSORIES	81349	1	PAOZZ	A H
2−156		**	KDM001−15CA4JF	3	BACKSHELL, EMI/ STRAIN RELIEF (31461) (ALT PN 901−307−11F) (56232) (spec dwg 1214498−211)	50619	1	PAOZZ	A H
2−157	W44−304	* **	2320037−304	2	CABLE ASSEMBLY, 275”	0WY55	1	PAOZZ	B
2−158	W44	* **	2320037−307	2	CABLE ASSEMBLY, 232”	0WY55	1	PAOZZ	C
2−159	W44P1	**	DDU−50SF0	3	CONNECTOR, ELECTRICAL, PLUG, 50 CONTACTS (56232) (spec dwg 1218767−205)	71468	1	PAOZZ	B C
2−160	W44P2	**	157−72500−3	3	CONNECTOR, PLUG (56232) (spec dwg 1218770−201)	02660	1	PAOZZ	B C
2−161		**	MS25036−148	3	TERMINAL LUG	96906	1	PAOZZ	B C
2−162		**	17−1657−50	3	BACKSHELL, EMI/RFI, STRAIN RELIEF (38250) (ALT PN C88000208) (56232) (spec dwg 1218764−205)	02660	1	PAOZZ	B C
2−163	W45	* **	2320037−305	2	CABLE ASSEMBLY, 260”	0WY55	1	PAOZZ	B
2−164	W45−308	* **	2320037−308	2	CABLE ASSEMBLY, 232”	0WY55	1	PAOZZ	C
2−165	W45P1	**	DDU−50SF0	3	CONNECTOR, ELECTRICAL, PLUG, 50 CONTACTS (56232) (spec dwg 1218767−205)	71468	1	PAOZZ	B C
2−166	W45P2	**	157−72500−3	3	CONNECTOR, PLUG (56232) (spec dwg 1218770−201)	02660	1	PAOZZ	B C
2−167		**	17−1657−50	3	BACKSHELL, EMI/RFI, STRAIN RELIEF (38250) (ALT PN C88000208) (56232) (spec dwg 1218764−205)	02660	1	PAOZZ	B C
2−168	W46	**	2320037−306	2	CABLE ASSEMBLY, 285”	0WY55	1	PAOZZ	B
2−169	W46−309	**	2320037−309	2	CABLE ASSEMBLY, 232”	0WY55	1	PAOZZ	C
2−170	W53	**	1213591−510	2	CABLE ASSEMBLY	56232	1	PAOOO	E F
2−171	W53P1 W53P2	**	L45R	3	CONNECTOR, COAXIAL, 7/8 IN. DIA FLANGE (56232) (spec dwg 1214567−202)	84147	2	PAOZZ	E F

NOTE * : SITE DEPENDENT
NOTE ** : NOT SHOWN

FIGURE AND INDEX NO.	REF DES		PART NUMBER	INDENT	DESCRIPTION	CAGE CODE	QTY PER ASSY	CODES SMR	CODES USABLE ON
2−172	W54	**	1213591−511	2	CABLE ASSEMBLY	56232	1	PAOOO	E
2−173	W54P1 W54P2	**	L45R	3	CONNECTOR, COAXIAL, 7/8 IN. DIA FLANGE (56232) (spec dwg 1214567−202)	84147	2	PAOZZ	E
2−174	W55	**	1213591−313	2	CABLE ASSEMBLY	56232	1	PAOOO	A B C D H
	W55	**	1213591−514	2	CABLE ASSEMBLY	56232	1	PAOOO	G
2−175	W55P1 W55P2	**	L45R	3	CONNECTOR, COAXIAL, 7/8 IN. DIA FLANGE (56232) (spec dwg 1214567−202)	84147	2	PAOZZ	A B C D H
	W55P1	**	L45R	3	CONNECTOR, COAXIAL, 7/8 IN. DIA FLANGE (56232) (spec dwg 1214567−202)	84147	1	PAOZZ	G
2−176	W55P2	**	L45W	3	CONNECTOR, N MALE (56232) (spec dwg 1217045−203)	84147	1	PAOZZ	G
2−177	W56	**	1213591−314	2	CABLE ASSEMBLY	56232	1	PAOOO	A B C D H
	W56	**	1213591−515	2	CABLE ASSEMBLY	56232	1	PAOOO	G
2−178	W56P1 W56P2	**	L45R	3	CONNECTOR, COAXIAL, 7/8 IN. DIA FLANGE (56232) (spec dwg 1214567−202)	84147	1	PAOZZ	A B C D G H
2−179	W56P2	**	L45R	3	CONNECTOR, COAXIAL, 7/8 IN. DIA FLANGE (56232) (spec dwg 1214567−202)	84147	1	PAOZZ	A B C D H
2−180	W56P2	**	L45W	3	CONNECTOR, N MALE (56232) (spec dwg 1217045−203)	84147	1	PAOZZ	G

NOTE * : SITE DEPENDENT

NOTE ** : NOT SHOWN

FIGURE AND INDEX NO.	REF DES		PART NUMBER	INDENT	DESCRIPTION	CAGE CODE	QTY PER ASSY	CODES SMR	CODES USABLE ON
2−181	W57/157	* **	90−868−201	2	CABLE ASSEMBLY (56232) (spec dwg 1218208−201)	57500	1	PAOZZ	
2−182	W57	**	90−868−203	2	CABLE ASSEMBLY, RF, FLEX (56232) (spec dwg 1218208−203)	57500	1	PAOOO	C H
2−183	W58/158	**	90−868−202	2	CABLE ASSEMBLY (56232) (spec dwg 1218208−202)	57500	1	PAOZZ	
2−184	W59/159	**	1213772−301	2	CABLE ASSEMBLY	56232	1	PAOOO	A B C D H
	W59/159	**	1213772−303	2	CABLE ASSEMBLY	56232	1	PAOOO	E F
	W59/159	**	1213772−305	2	CABLE ASSEMBLY	56232	1	PAOOO	G
2−185	W59/159P1 W59/159P2	**	L4NM	3	CONNECTOR, COAXIAL (56232) (spec dwg 1217045−201)	84147	2	PAOZZ	
2−186	W60/160	**	1213772−302	2	CABLE ASSEMBLY	56232	1	PAOOO	A B C D H
	W60/160	**	1213772−304	2	CABLE ASSEMBLY	56232	1	PAOOO	E F
	W60/160	**	1213772−306	2	CABLE ASSEMBLY	56232	1	PAOOO	G
2−187	W60/160P1 W60/160P2	**	L4NM	3	CONNECTOR, COAXIAL (56232) (spec dwg 1217045−201)	84147	2	PAOZZ	
2−188	W61/161	**	1213479−301	2	CABLE ASSEMBLY	56232	1	PAOOO	A B C D H
	W61	**	1213479−302	2	CABLE ASSEMBLY	56232	1	PAOOO	E
	W61/161	**	1213479−304	2	CABLE ASSEMBLY	56232	1	PAOOO	F G
2−189	W61/161P1 W61/161P2	**	L4NM	3	CONNECTOR, COAXIAL (56232) (spec dwg 1217045−201)	84147	2	PAOZZ	
2−190	W62	* **	1223850−301	2	CABLE ASSEMBLY	56232	1	PAOOO	C H

NOTE * : SITE DEPENDENT
NOTE ** : NOT SHOWN

FIGURE AND INDEX NO.	REF DES		PART NUMBER	INDENT	DESCRIPTION	CAGE CODE	QTY PER ASSY	CODES SMR	CODES USABLE ON
2−191	W62P1 W62P3	**	MS3476W14−12S	3	CONNECTOR	96906	2	PAOZZ	C H
2−192	W62P2	**	DAU−15PF0	3	CONNECTOR, ELECTRICAL, PLUG (56232) (spec dwg 1218768−202)	71468	1	PAOZZ	C H
2−193		**	17−1657−15	3	BACKSHELL, D−SUB, RFI/EMI (38250) (ALT PN C88000207) (56232) (spec dwg 1218764−202)	02660	1	PAOZZ	C H
2−194		**	MS25036−149	3	TERMINAL LUG	96906	1	PAOZZ	C H
2−195		**	M39029/64−369	3	CONTACT, PIN	81349	15	PAOZZ	C H
2−196	W63	**	1224038−302	2	CABLE ASSEMBLY	56232	1	PAOOO	D H
	W63	**	1224038−301	2	CABLE ASSEMBLY	56232	1	PAOOO	C
2−197	W63P1	**	DAU−15SF0	3	CONNECTOR, RECEPTACLE, ELECTRICAL (56232) (spec dwg 1218767−202)	71468	1	PAOZZ	A D H
2−198		**	17−1657−15	3	BACKSHELL, D−SUB, RFI/EMI (38250) (ALT PN C88000207) (56232) (spec dwg 1218764−202)	02660	1	PAOZZ	A D H
2−199		**	030−1953−000	3	CONTACT, SOCKET, ELECTRICAL (56232) (spec dwg 1218765−201)	71468	4	PAOZZ	A D H
2−200	W64	**	1222332−302	2	CABLE ASSEMBLY	56232	1	PAOOO	D H
2−201	W64P1	**	5−554739−2	3	TELEPHONE PLUG (56232) (spec dwg 1214488−201)	00779	1	PAOZZ	A D H
2−202	W65/165	* **	1223862−301	2	CABLE ASSEMBLY	56232	2	PAOOO	H
2−203	W65/165P1	**	MS3406D18−4S	3	CONNECTOR	96906	1	PAOZZ	H
2−204		**	M85049/52−1−18W	3	CONNECTOR ACCESSORIES	81349	1	PAOZZ	H
2−205		**	MS25036−149	3	TERMINAL LUG	96906	1	PAOZZ	H
2−206	W74/174	**	1213480−301	2	CABLE ASSEMBLY	56232	1	PAOOO	A B C D H

NOTE * : SITE DEPENDENT
NOTE ** : NOT SHOWN

FIGURE AND INDEX NO.	REF DES		PART NUMBER	INDENT	DESCRIPTION	CAGE CODE	QTY PER ASSY	CODES SMR	CODES USABLE ON
	W74	**	1213480−302	2	CABLE ASSEMBLY	56232	1	PAOOO	E F
	W74/174	**	1213480−303	2	CABLE ASSEMBLY	56232	1	PAOOO	G
2−207	W74/174P1 W74/174P2	**	M39012/16−0017	3	CONNECTOR	81349	2	PAOZZ	
2−208	W75/175	**	90−850−202	2	CABLE ASSEMBLY (56232) (spec dwg 1213481−202)	57500	1	PAOOO	
2−209	W75/175P1	**	M39012/55−3129	3	CONNECTOR	81349	1	PAOZZ	
2−210	W75/175P2	**	M39012/16−0013	3	CONNECTOR	81349	1	PAOZZ	
2−211	W76/176	**	1213720−302	2	CABLE ASSEMBLY	56232	1	PAOOO	
2−212	W76/176P1 W76/176P2	**	M39012/16−0013	3	CONNECTOR	81349	2	PAOZZ	
2−213	W88	**	1217030−301	2	CABLE ASSEMBLY	56232	1	PAOOO	
2−214		**	MS25036−106	3	TERMINAL LUG	96906	2	PAOZZ	
2−215		**	MS25036−154	3	TERMINAL LUG	96906	1	PAOZZ	
2−216	W95/195	**	2320063−301	2	CABLE ASSEMBLY, 300”	0WY55	1	PAOZZ	B C
2−217	W95/195−302	**	2320063−302	2	CABLE ASSEMBLY, 390”	0WY55	1	PAOZZ	G
2−218	W100	**	1217798−301	2	CABLE ASSEMBLY	56232	1	PAOOO	C H
2−219	W100P1 W100P2	**	M24308/4−5	3	CONNECTOR	81349	2	PAOZZ	C H
2−220		**	CTO1949−2JR	3	BACKSHELL ASSEMBLY, EMI/RFI, STRAIN RELIEF (56232) (spec dwg 1217032−252)	50619	2	PAOZZ	C H
2−221	W130	**	1213476−302	2	CABLE ASSEMBLY	56232	1	PAOOO	C H
2−222	W130P1 W130P2	**	M24308/2−5	3	CONNECTOR	81349	2	PAOZZ	C H
2−223		**	KDM001−50CA2JR	3	BACKSHELL, EMI/RFI, STRAIN RELIEF (31461) (ALT PN 901−307−22F) (56232) (spec dwg 1214498−222)	50619	1	PAOZZ	C H
2−224		**	KDM001−50CA5J	3	BACKSHELL, EMI/RFI, STRAIN RELIEF (31461) (ALT PN 901−307−33F) (56232) (spec dwg 1214498−233)	50619	1	PAOZZ	C H
2−225	W155	**	1221798−309	2	CABLE ASSEMBLY	56232	1	PAOOO	C H

NOTE * : SITE DEPENDENT
NOTE ** : NOT SHOWN

FIGURE AND INDEX NO.	REF DES		PART NUMBER	INDENT	DESCRIPTION	CAGE CODE	QTY PER ASSY	CODES SMR	CODES USABLE ON
2−226	W155P1 W155P2	**	L44R	3	CONNECTOR, COAXIAL, 7/8 IN. DIA FLANGE (56232) (spec dwg 1214567−201)	84147	2	PAOZZ	C H
2−227	W156	* **	1221798−310	2	CABLE ASSEMBLY	56232	1	PAOOO	C H
2−228	W156P1 W156P2	**	L44R	3	CONNECTOR, COAXIAL, 7/8 IN. DIA FLANGE (56232) (spec dwg 1214567−201)	84147	2	PAOZZ	C H
2−229	W162−301	**	2320064−301	2	CABLE ASSEMBLY, 520”	0WY55	1	PAOZZ	C
2−230	W162−1	**	2320064−307	2	CABLE ASSEMBLY, 834”	0WY55	1	PAOZZ	G
2−231	W163−302	**	2320064−302	2	CABLE ASSEMBLY, 520”	0WY55	1	PAOZZ	C
2−232	W163−1	**	2320064−308	2	CABLE ASSEMBLY, 834”	0WY55	1	PAOZZ	G
2−233	W164−303	* **	2320064−303	2	CABLE ASSEMBLY, 436”	0WY55	1	PAOZZ	C
2−234	W166−301	**	2320065−301	2	CABLE ASSEMBLY, 520”	0WY55	1	PAOZZ	C
2−235	W166−1	**	2320065−303	2	CABLE ASSEMBLY, 834”	0WY55	1	PAOZZ	G
2−236	W168−301	**	2320066−301	2	CABLE ASSEMBLY, 520”	0WY55	1	PAOZZ	C
2−237	W168−1	**	2320066−303	2	CABLE ASSEMBLY, 834”	0WY55	1	PAOZZ	G
2−238	W169−304	**	2320064−304	2	CABLE ASSEMBLY, 397”	0WY55	1	PAOZZ	C
2−239	W169−1	**	2320064−309	2	CABLE ASSEMBLY, 468”	0WY55	1	PAOZZ	G
2−240	W170−305	**	2320064−305	2	CABLE ASSEMBLY, 397”	0WY55	1	PAOZZ	C
2−241	W170−1	**	2320064−310	2	CABLE ASSEMBLY, 468”	0WY55	1	PAOZZ	G
2−242	W171−306	**	2320064−306	2	CABLE ASSEMBLY, 316”	0WY55	1	PAOZZ	C
2−243	W173−302	**	2320065−302	2	CABLE ASSEMBLY, 397”	0WY55	1	PAOZZ	C
2−244	W173−1	**	2320065−304	2	CABLE ASSEMBLY, 468”	0WY55	1	PAOZZ	G
2−245	W178−302	**	2320066−302	2	CABLE ASSEMBLY, 397”	0WY55	1	PAOZZ	C
2−246	W178−1	**	2320066−304	2	CABLE ASSEMBLY, 468”	0WY55	1	PAOZZ	G
2−247	W181	**	1222370−301	2	CABLE ASSEMBLY	56232	1	PAOOO	H
2−248	W181P1	**	DAU−15PF0	3	CONNECTOR, ELECTRICAL PLUG (56232) (spec dwg 1218768−202)	71468	1	PAOZZ	H
2−249	W181P2	**	157−72500−3	3	CONNECTOR, PLUG (56232) (spec dwg 1218770−201)	02660	1	PAOZZ	H
2−250		**	17−1657−15	3	BACKSHELL, D−SUB, RFI/EMI (38250) (ALT PN C88000207) (56232) (spec dwg 1218764−202)	02660	1	PAOZZ	H

NOTE * : SITE DEPENDENT
NOTE ** : NOT SHOWN

FIGURE AND INDEX NO.	REF DES		PART NUMBER	INDENT	DESCRIPTION	CAGE CODE	QTY PER ASSY	CODES SMR	CODES USABLE ON
2−251		**	030−1952−002	3	CONTACT, PIN (56232) (spec dwg 1218766−202)	71468	15	PAOZZ	H
2−252	W182	**	1223418−301	2	CABLE ASSEMBLY	56232	1	PAOOO	H
2−253	W182P1 W182P2	**	DAU−15PF0	3	CONNECTOR, ELECTRICAL PLUG (56232) (spec dwg 1218768−202)	71468	2	PAOZZ	H
2−254		**	17−1657−15	3	BACKSHELL, D−SUB, RFI/EMI (38250) (ALT PN C88000207) (56232) (spec dwg 1218764−202)	02660	2	PAOZZ	H
2−255		**	M39029/64−369	3	CONTACT, PIN	81349	16	PAOZZ	H
2−256	W183	**	1223418−302	2	CABLE ASSEMBLY	56232	1	PAOOO	H
2−257	W183P1 W183P2	**	DAU−15PF0	3	CONNECTOR, ELECTRICAL PLUG (56232) (spec dwg 1218768−202)	71468	2	PAOZZ	H
2−258		**	17−1657−15	3	BACKSHELL, D−SUB, RFI/EMI (38250) (ALT PN C88000207) (56232) (spec dwg 1218764−202)	02660	2	PAOZZ	H
2−259		**	M39029/64−369	3	CONTACT, PIN	81349	24	PAOZZ	H
2−260	W184	**	1222371−303	2	CABLE ASSEMBLY	56232	1	PAOOO	C H
2−261	W184P1 W184P2	**	DAU−15PF0	3	CONNECTOR, ELECTRICAL PLUG (56232) (spec dwg 1218768−202)	71468	2	PAOZZ	C H
2−262		**	17−1657−15	3	BACKSHELL, D−SUB, RFI/EMI (38250) (ALT PN C88000207) (56232) (spec dwg 1218764−202)	02660	2	PAOZZ	C H
2−263		**	M39029/64−369	3	CONTACT, PIN	81349	24	PAOZZ	C H
2−264	W185	**	1222371−304	2	CABLE ASSEMBLY	56232	1	PAOOO	H
2−265	W185P1 W185P2	**	DAU−15PF0	3	CONNECTOR, ELECTRICAL PLUG (56232) (spec dwg 1218768−202)	71468	2	PAOZZ	H
2−266		**	17−1657−15	3	BACKSHELL, D−SUB, RFI/EMI (38250) (ALT PN C88000207) (56232) (spec dwg 1218764−202)	02660	2	PAOZZ	H
2−267		**	M39029/64−369	3	CONTACT, PIN	81349	12	PAOZZ	H

NOTE * : SITE DEPENDENT

NOTE ** : NOT SHOWN

FIGURE AND INDEX NO.	REF DES	PART NUMBER	INDENT	DESCRIPTION	CAGE CODE	QTY PER ASSY	CODES SMR	CODES USABLE ON
2−268	* **	1217802−301	2	CABLE ASSEMBLY, GROUND	56232	2	PAOOO	
2−269	**	MS20659−123	3	TERMINAL LUG	96906	1	PAOZZ	
2−270	**	MS20659−124	3	TERMINAL LUG	96906	1	PAOZZ	
2−271	* **	1217802−302	2	CABLE ASSEMBLY, GROUND	56232	2	PAOOO	
2−272	**	MS20659−123	3	TERMINAL LUG	96906	2	PAOZZ	
2−273	* **	1217802−303	2	CABLE ASSEMBLY, GROUND	56232	2	PAOOO	
2−274	**	MS20659−123	3	TERMINAL LUG	96906	2	PAOZZ	
2−275	* **	1217802−304	2	CABLE ASSEMBLY, GROUND	56232	2	PAOOO	
2−276	**	MS25036−120	3	TERMINAL LUG	96906	2	PAOZZ	
2−277	* **	1217802−305	2	CABLE ASSEMBLY, GROUND	56232	2	PAOOO	
2−278	**	MS25036−120	3	TERMINAL LUG	96906	1	PAOZZ	
2−279	**	MS25036−122	3	TERMINAL LUG	96906	1	PAOZZ	
2−280	**	1217802−306	2	CABLE ASSEMBLY, GROUND	56232	1	PAOOO	
2−281	**	MS25036−120	3	TERMINAL LUG	96906	1	PAOZZ	
2−282	**	MS25036−122	3	TERMINAL LUG	96906	1	PAOZZ	
2−283	**	1217802−307	2	CABLE ASSEMBLY, GROUND	56232	1	PAOOO	B C
2−284	**	MS20659−123	3	TERMINAL LUG	96906	2	PAOZZ	B C
2−285	**	1217802−308	2	CABLE ASSEMBLY, GROUND	56232	1	PAOOO	D
2−286	**	MS25036−120	3	TERMINAL LUG	96906	1	PAOZZ	D
2−287	**	MS25036−122	3	TERMINAL LUG	96906	1	PAOZZ	D
2−288	**	1217802−309	2	CABLE ASSEMBLY, GROUND	56232	1	PAOOO	A
2−289	**	MS25036−120	3	TERMINAL LUG	96906	2	PAOZZ	A
2−290	**	MS25036−122	3	TERMINAL LUG	96906	1	PAOZZ	A
2−291	**	1217802−311	2	CABLE ASSEMBLY, GROUND	56232	1	PAOOO	C
2−292	**	MS25036−120	3	TERMINAL LUG	96906	1	PAOZZ	C
2−293	**	MS25036−122	3	TERMINAL LUG	96906	1	PAOZZ	C
2−294	70/170 *	2300006−3XX	2	RPG PROCESSOR/ COMMUNICATIONS ASSEMBLY (For breakdown see FIGURE 63 on Page 2 − 445)	0WY55	1	XB	B C

NOTE * : SITE DEPENDENT
NOTE ** : NOT SHOWN

FIGURE AND INDEX NO.	REF DES	PART NUMBER	INDENT	DESCRIPTION	CAGE CODE	QTY PER ASSY	CODES SMR	CODES USABLE ON
2−295	N100F1 * **	COHP−150	2	ARRESTOR, ELECTRICAL SURGE PROTECTOR (56232) (spec dwg 1222345−201)	0HHK2	26	PAOZZ	B C
2−296	N100F3 * **	MGB	2	ARRESTOR, GROUNDING BAR (56232) (spec dwg 1222345−202)	0HHK2	2	PAOZZ	B C
2−297	1A26 **	1218807−302	2	LINE PROTECTOR ASSEMBLY	56232	1	PAODD	L
2−298	1A28 * **	PC642C−150LCW AND PCB1B−10A	2	ARRESTOR, SURGE (56232) (spec dwg 1222341−201)	0HHK2	1	PAOZZ	A D H
2−299	31 *	1217083−301	2	RELAY BOX ASSEMBLY	56232	1	PAODD	C
				(ATTACHING PARTS)				
		3153407	2	SCREW, TAPPING (56232) (spec dwg 1217031−201)	83910	4	PAOZZ	
		MS15795−810	2	WASHER	96906	4	PAOZZ	
				− − − − − − − − − −				
2−300	31K1 **	M6106/51−002	3	RELAY	81349	AR	PAOZZ	C
2−301	31A1 * 31A2 **	1218124−301	3	CIRCUIT CARD ASSEMBLY, RELAY LOGIC	56232	2	PAOLD	
				(ATTACHING PARTS)				
		MS51957−15	3	SCREW	96906	16	PAOZZ	
		MS35338−138	3	WASHER	96906	16	PAOZZ	
		MS15795−803	3	WASHER	96906	16	PAOZZ	
		NAS1831C4B10	3	POST	80205	8	PAOZZ	
				− − − − − − − − − −				

NOTE * : SITE DEPENDENT

NOTE ** : NOT SHOWN

FIGURE AND INDEX NO.	REF DES	PART NUMBER	INDENT	DESCRIPTION	CAGE CODE	QTY PER ASSY	CODES	
							SMR	USABLE ON
		USABLE ON CODES A − RDA SHELTER B − DOD SHELTER C − FAA SHELTER D − RDA SHELTER 24 FOOT E − TRAINING SITE, K. C. F − TRAINING SITE, KEESLER G − DEPOT K.C. BANNISTER−7JB H − REDUNDANT RDA SHELTER J − NWS DESHELTERIZED SITE, MEDFORD, OR K − NWS DESHELTERIZED SITE, MISSOULA, MT L − MLOS SHELTER						
	NOTE * : SITE DEPENDENT NOTE ** : NOT SHOWN							

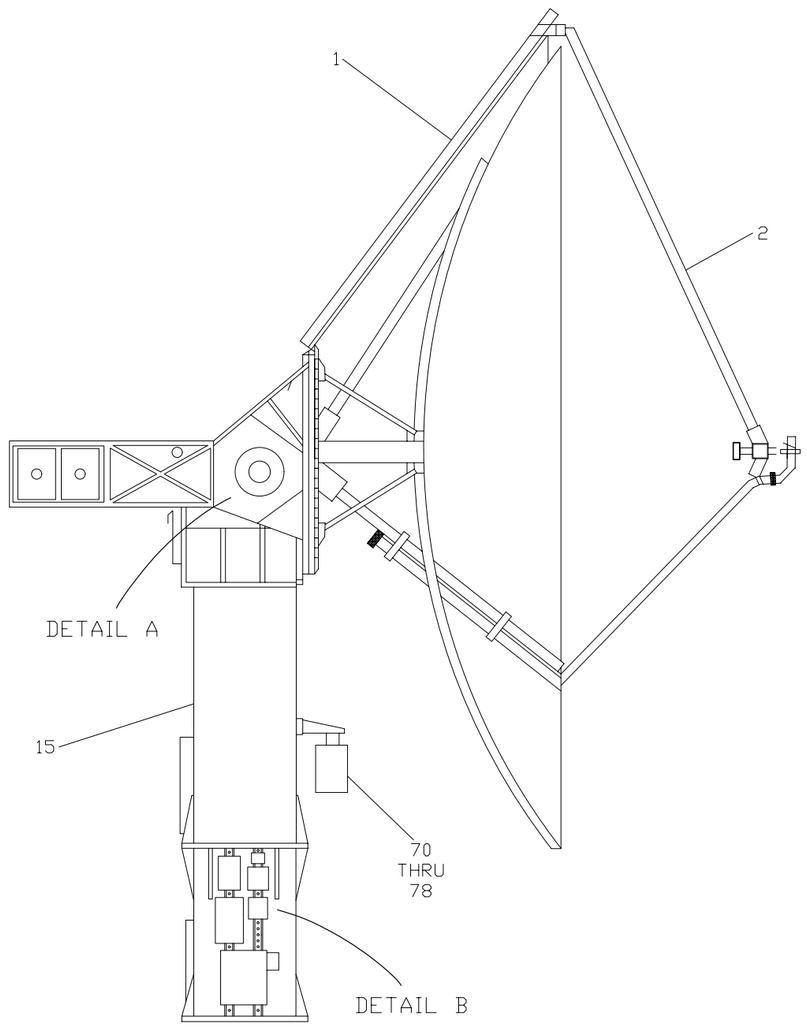

LIMITED PRODUCTION (WITH LINEAR POLARIZATION MODIFICATION)

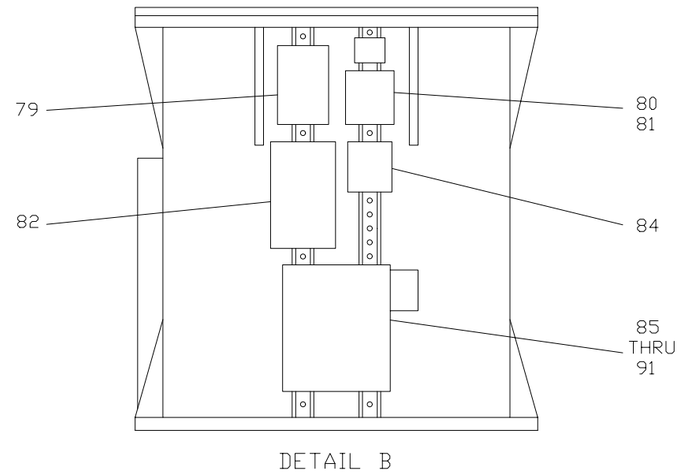

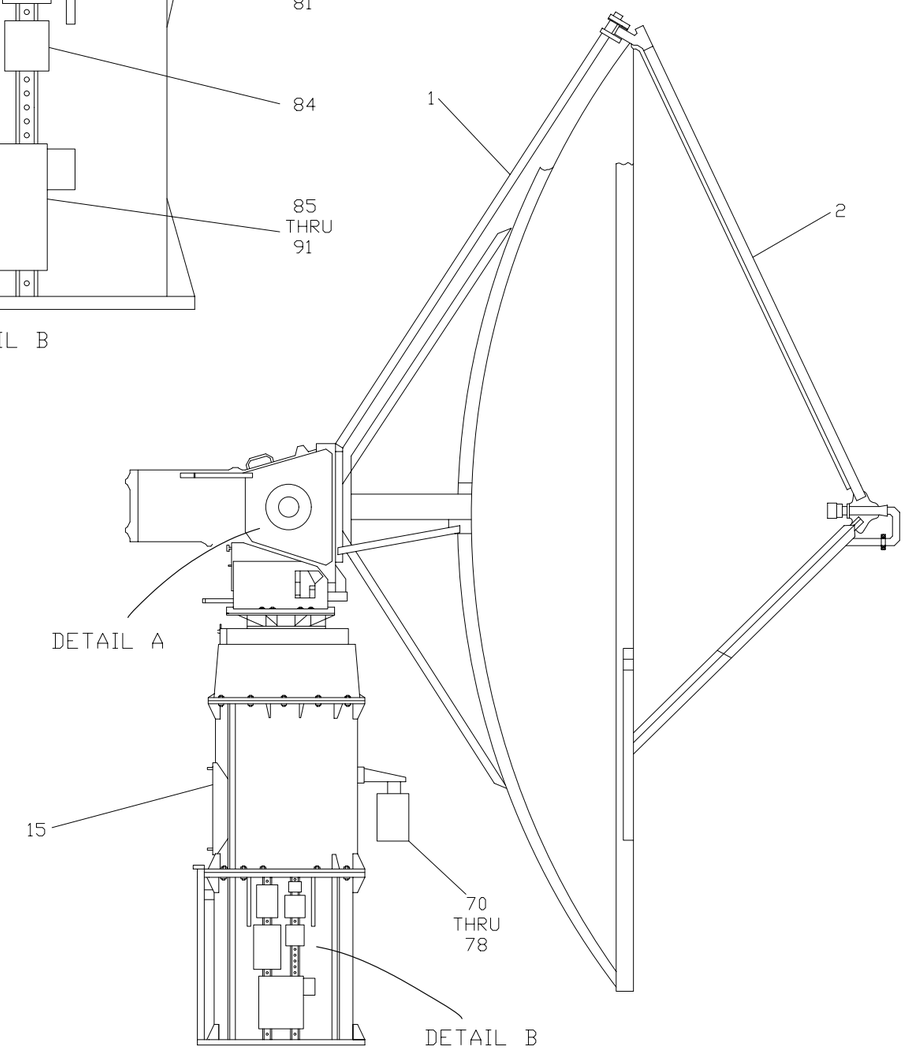

FULL SCALE PRODUCTION (LINEAR POLARIZATION)

NX1118

FIGURE 3. Antenna/Pedestal, UD2 (Sheet 1 of 3)

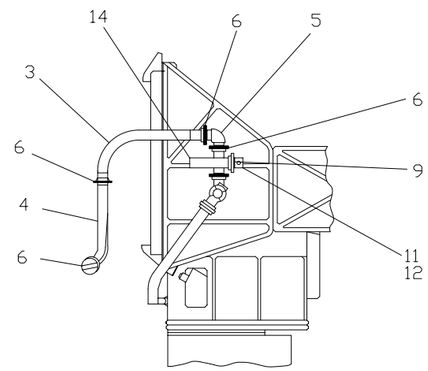

RIGHT SIDE

DETAIL A

LIMITED PRODUCTION CONFIGURATION
(WITH LINEAR POLARIZATION MODIFICATION)

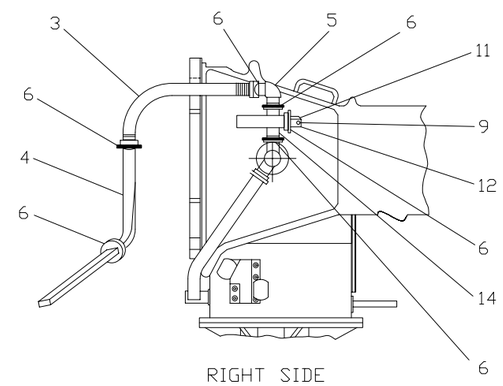

RIGHT SIDE

DETAIL A

FULL SCALE PRODUCTION
(LINEAR POLARIZATION) CONFIGURATION

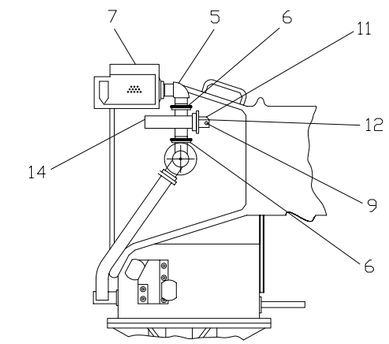

RIGHT SIDE

DETAIL A

FULL SCALE PRODUCTION TRAINING
(LINEAR POLARIZATION) CONFIGURATION

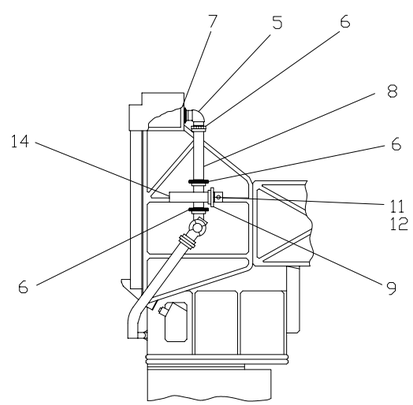

RIGHT SIDE

DETAIL A

LIMITED PRODUCTION TRAINING CONFIGURATION
(WITH LINEAR POLARIZATION MODIFICATION)

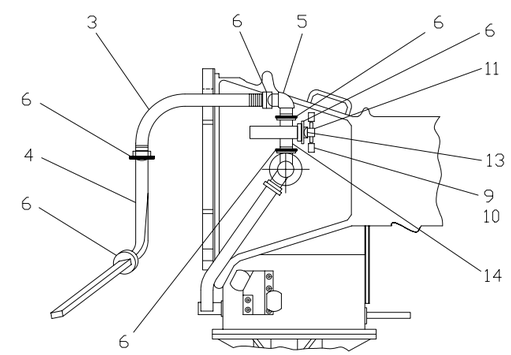

RIGHT SIDE

DETAIL A

REDUNDANT
(LINEAR POLARIZATION) CONFIGURATION

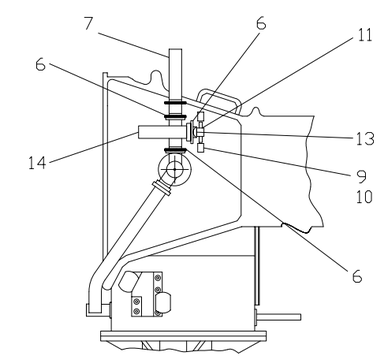

RIGHT SIDE

DETAIL A

TRAINING REDUNDANT
(LINEAR POLARIZATION) CONFIGURATION

NX1119

FIGURE 3. Antenna/Pedestal, UD2 (Sheet 2 of 3)

CABLE ASSEMBLIES (NOT SHOWN)

INDEX NO.	REF DES	FROM	TO	USABLE ON CODE
3−16	2W5	P1(W53P1)	P2(A3J3)	
3−20	2W6	P1(W54P1)	P2(A3A4J2)	
3−23	2W14	P1(W153P1)	P2(A3A7J3)	E
3−26	2W15	P1(W154P1)	P2(A3A8J2)	E
3−29	2W20	A3J3	P1(A2J5) P2(A3A3J4) P3(A3A4J3)	A−D
3−45	2W21	P1(A1A5J1)	P2(A1J2)	A−D
3−67	2W27	P1(A1A5J1) P3(A1A9J1)	P2(A1J2)	E
3−71	2W28	P1(WG01J1)	P2(A5J1)	E
3−92	2W21	P1(A1FL1J1)	P2(A1A1J2)	G
3−97	2W29	P1(A1A5J1)	P2(A1FL1J2)	F, G
3−101	2W30	P1(A1A9J1)	P2(A1FL2J2)	F
3−105	2W27	P1(A1FL1J1)	P2(A1A1J2)	F
		P3(A1FL2J1)		F

FIGURE 3. Antenna/Pedestal, UD2 (Sheet 3 of 3)

FIGURE AND INDEX NO.	REF DES	PART NUMBER	INDENT	DESCRIPTION	CAGE CODE	QTY PER ASSY	CODES SMR	CODES USABLE ON
3−	2 *	1214777−XXX	1	ANTENNA/PEDESTAL (For NHA see FIGURE 1 on Page 2 − 1)	56232	REF	PBFDD	A C
	2 *	1219667−XXX	1	ANTENNA/PEDESTAL (For NHA see FIGURE 1 on Page 2 − 1)	56232	REF	PBFDD	B D E
3−1	2MP1 **	172670X	2	LADDER KIT ASSEMBLY	84147	1	PBFDD	
				(ATTACHING PARTS)				
		MS35308−366	2	BOLT	96906	4	PAOZZ	
		MS35308−374	2	BOLT	96906	2	PAOZZ	
		MS15795−814	2	WASHER	96906	8	PAOZZ	
		MS35338−141	2	WASHER	96906	6	PAOZZ	
		MS21044−C06	2	NUT	80205	6	PAOZZ	
				− − − − − − − − −				
3−2	2A2	171750X	2	FEED ANTENNA ASSEMBLY (For breakdown see FIGURE 12 on Page 2 − 121)	35844	1	XA	A
	2A2	172560X	2	FEED ANTENNA ASSEMBLY (For breakdown see FIGURE 12 on Page 2 − 121)	35844	1	PBFDD	B E
	**	54636−8005	2	FIXTURE, INERTIA LOAD	26795	1	XB	C
	**	40505−8023	2	FIXTURE, INERTIA LOAD	26795	1	XB	D
				(ATTACHING PARTS)				
		MS16998−113	2	SCREW	96906	2	PAOZZ	
		MS16998−110	2	SCREW	96906	4	PAOZZ	
		MS15795−820	2	WASHER	96906	6	PAOZZ	
		MS35338−145	2	WASHER	96906	6	PAOZZ	
		MS51968−21	2	NUT	96906	2	PAOZZ	
				− − − − − − − − −				
3−3	2WG3	TFT−86079	2	WAVEGUIDE ASSEMBLY, FLEXIBLE (80006) (ALT PN 127235) (56232) (spec dwg 1389860−201)	06351	1	PAOZZ	A B E
3−4	2WG4	1389863−301	2	WAVEGUIDE ASSEMBLY, PEDESTAL, TRANSMIT	56232	1	PAOZZ	A B E

NOTE * : SITE DEPENDENT
NOTE ** : NOT SHOWN

FIGURE AND INDEX NO.	REF DES	PART NUMBER	INDENT	DESCRIPTION	CAGE CODE	QTY PER ASSY	CODES SMR	CODES USABLE ON
				(ATTACHING PARTS)				
		MS16995−50	2	SCREW	96906	24	PAOZZ	A B E
		MS35338−139	2	WASHER	96906	24	PAOZZ	A B E
				− − − − − − − − −				
3−5	2WG2	1389864−301	2	WAVEGUIDE ASSEMBLY, PEDESTAL, TRANSMIT	56232	1	PAOZZ	A B E
	2WG2	1389864−302	2	WAVEGUIDE ASSEMBLY, PEDESTAL, TRANSMIT	56232	1	PAOZZ	C D
				(ATTACHING PARTS)				
		MS16995−50	2	SCREW	96906	8	PAOZZ	A C
		MS35338−139	2	WASHER	96906	8	PAOZZ	A
				− − − − − − − − −				
3−6		MS90064−17	2	PACKING, PREFORMED	96906	9	PCOZZ	
3−7		20729	2	DUMMY LOAD, ELECTRICAL WAVEGUIDE, HIGH POWER (56232) (spec dwg 1213658−201)	00443	1	PAOZZ	C D
				(ATTACHING PARTS)				
		MS16997−62	2	SCREW	96906	8	PAOZZ	C D
		MS35338−139	2	WASHER	96906	8	PAOZZ	B C
		MS15795−810	2	WASHER	96906	8	PAOZZ	B C D
				− − − − − − − − −				
3−8		1213778−311	2	WAVEGUIDE ASSEMBLY, STRAIGHT	56232	1	PAOZZ	C
				(ATTACHING PARTS)				
		MS16995−50	2	SCREW	96906	8	PAOZZ	C
		MS35338−139	2	WASHER	96906	8	PAOZZ	C
				− − − − − − − − −				
	NOTE * : SITE DEPENDENT NOTE ** : NOT SHOWN							

FIGURE AND INDEX NO.	REF DES	PART NUMBER	INDENT	DESCRIPTION	CAGE CODE	QTY PER ASSY	CODES SMR	CODES USABLE ON
3−9	2A5	466B−1	2	MONITOR, RF POWER (11332) (ALT PN N425−838) (56232) (spec dwg 1213625−201)	99899	1	PAOLD	
3−10	2A9	466B−1	2	MONITOR, RF POWER (11332) (ALT PN N425−838) (56232) (spec dwg 1213625−201)	99899	1	PAOLD	E
3−11	2WG1	AMC 1026	2	ADAPTER, WAVEGUIDE TO COAX (01456) (ALT PN 284AC279−1) (56232) (spec dwg 1213661−201)	28916	1	PAOZZ	
3−12	2AT1	MDC1078S−6	2	ATTENUATOR, COAXIAL (99899) (ALT PN 779−6) (56232) (spec dwg 1214765−204)	52335	1	PAOZZ	A B C D
3−13	2A6	HP11636A	2	COUPLER, TRANSMISSION LINE (56232) (spec dwg 1217743−201) (93459) (ALT PN 1506ADC18−0GHZ)	28480	1	PAOZZ	E
3−14	2DC1	435241	2	COUPLER, DIRECTIONAL CROSSGUIDE (56232) (spec dwg 1213628−201)	80006	1	PAOZZ	
				(ATTACHING PARTS)				
		MS16995−50	2	SCREW	96906	16	PAOZZ	
		MS35338−139	2	WASHER	96906	16	PAOZZ	
				− − − − − − − − −				
3−15	2A1	54636−1001−101	2	PEDESTAL ASSEMBLY (For NHA see FIGURE 4 on Page 2 − 71)	1M813	1	PBFDD	A C
	2A1	40505−1001−101	2	PEDESTAL ASSEMBLY (For NHA see FIGURE 4 on Page 2 − 71)	1M813	1	PBFDD	B D
	2A1	40505−1001−102	2	PEDESTAL ASSEMBLY (For NHA see FIGURE 4 on Page 2 − 71)	1M813	1	PBFDD	E
3−16	2W5 **	1221798−303	2	CABLE ASSEMBLY	56232	1	PAOOO	B C D E
3−17	2W5 **	1213485−301	2	CABLE ASSEMBLY	56232	1	PAOOO	A

NOTE * : SITE DEPENDENT
NOTE ** : NOT SHOWN

FIGURE AND INDEX NO.	REF DES	PART NUMBER	INDENT	DESCRIPTION	CAGE CODE	QTY PER ASSY	CODES SMR	CODES USABLE ON
3−18	2W5P1 **	L44R	3	CONNECTOR, COAXIAL (56232) (spec dwg 1214567−201)	84147	1	PAOZZ	
3−19	2W5P2 **	L4NM	3	CONNECTOR, COAXIAL (56232) (spec dwg 1217045−201)	84147	1	PAOZZ	
3−20	2W6 **	1221798−304	2	CABLE ASSEMBLY	56232	1	PAOOO	
3−21	2W6P1 **	L44R	3	CONNECTOR, COAXIAL (56232) (spec dwg 1214567−201)	84147	1	PAOZZ	
3−22	2W6P2 **	L4PNR	3	CONNECTOR, COAXIAL (56232) (spec dwg 1221793−201)	84147	1	PAOZZ	
3−23	2W14 **	1221798−305	2	CABLE ASSEMBLY	56232	1	PAOOO	E
3−24	2W14P1 **	L44R	3	CONNECTOR, COAXIAL (56232) (spec dwg 1214567−201)	84147	1	PAOZZ	E
3−25	2W14P2 **	L4NM	3	CONNECTOR, COAXIAL (56232) (spec dwg 1217045−201)	84147	1	PAOZZ	E
3−26	2W15 **	1221798−306	2	CABLE ASSEMBLY	56232	1	PAOOO	E
3−27	2W15P1 **	L44R	3	CONNECTOR, COAXIAL (56232) (spec dwg 1214567−201)	84147	1	PAOZZ	E
3−28	2W15P2 **	L4NM	3	CONNECTOR, COAXIAL (56232) (spec dwg 1217045−201)	84147	1	PAOZZ	E
3−29	2W20 **	1221796−303	2	CABLE ASSEMBLY	56232	1	PAOOO	B C D
3−30	2W20 **	1221796−301	2	CABLE ASSEMBLY	56232	1	PAOOO	A
3−31	2W20P1 **	MS3406D28−21SW	3	CONNECTOR	96906	1	PAOZZ	A B C D
3−32	2W20P2 **	M24308/2−2	3	CONNECTOR	81349	1	PAOZZ	A B C D
3−33	2W20P3 **	M24308/2−1	3	CONNECTOR	81349	1	PAOZZ	A B C D

NOTE * : SITE DEPENDENT
NOTE ** : NOT SHOWN

FIGURE AND INDEX NO.	REF DES	PART NUMBER	INDENT	DESCRIPTION	CAGE CODE	QTY PER ASSY	CODES SMR	CODES USABLE ON
3−34	2W20J3 **	MS3400D28−21P	3	CONNECTOR	96906	1	PAOZZ	A B C D
3−35	**	M85049/52−1−28W	3	CONNECTOR ACCESSORIES	81349	2	PAOZZ	A B C D
3−36	**	M85049/48−2−2	3	CONNECTOR ACCESSORIES	81349	1	PAOZZ	A B C D
3−37	**	85062−01	3	CONNECTOR ACCESSORIES	14933	1	PAOZZ	A B C D
3−38	**	M85049/48−2−1	3	SHIELD, CONNECTOR	81349	1	PAOZZ	A B C D
3−39	**	MS3420−6A	3	ADAPTER	96906	1	PAOZZ	A B C D
3−40	**	MS3420−8A	3	ADAPTER	96906	1	PAOZZ	A B C D
3−41	**	MS3420−12A	3	ADAPTER	96906	1	PAOZZ	A B C D
3−42	**	MS3420−16A	3	ADAPTER	96906	2	PAOZZ	A B C D
3−43	**	MS25036−102	3	TERMINAL LUG (98410) (ALT PN A532−06)	96906	1	PAOZZ	A B C D
3−44	**	MS25036−148	3	TERMINAL LUG	96906	2	PAOZZ	A B C D

NOTE * : SITE DEPENDENT
NOTE ** : NOT SHOWN

FIGURE AND INDEX NO.	REF DES		PART NUMBER	INDENT	DESCRIPTION	CAGE CODE	QTY PER ASSY	CODES SMR	CODES USABLE ON
3−45	2W21	* **	1221797−303	2	CABLE ASSEMBLY	56232	1	PAOOO	A B C D
3−46	2W21P1	**	MS3476W14−18S	3	CONNECTOR	96906	1	PAOZZ	A B C D
3−47	2W21P2	**	MS3406D28−21PW	3	CONNECTOR	96906	1	PAOZZ	A B C D
3−48		**	390AS001NF2806H6	3	BACKSHELL, CONNECTOR (56232) (spec dwg 1223746−201)	06324	1	PAOZZ	A B C D
3−49		**	M85049/10−116W	3	ADAPTER	81349	1	PAOZZ	A B C D
3−50		**	MS25036−102	3	TERMINAL LUG (98410) (ALT PN A532−06)	96906	1	PAOZZ	A B C D
3−51		**	MS3420−10A	3	ADAPTER	96906	1	PAOZZ	A B C D
3−52		**	MS3420−16A	3	ADAPTER	96906	1	PAOZZ	A B C D
3−53	2W26P1	**	MS3406D28−21SW	3	CONNECTOR	96906	1	PAOZZ	E
3−54	2W26P2 2W26P4	**	M24308/2−2	3	CONNECTOR	81349	2	PAOZZ	E
3−55	2W26P3 2W26P5	**	M24308/2−1	3	CONNECTOR	81349	1	PAOZZ	E
3−56	2W26P6	**	MS3476W14−12S	3	CONNECTOR	96906	1	PAOZZ	E
3−57	2W26J3	**	MS3400D28−21P	3	CONNECTOR	96906	1	PAOZZ	E
3−58	2W26J5	**	MS3400D28−15P	3	CONNECTOR	96906	1	PAOZZ	E
3−59		**	M85049/52−1−28W	3	CONNECTOR ACCESSORIES	81349	3	PAOZZ	E
3−60		**	M85049/48−2−2	3	CONNECTOR ACCESSORIES	81349	2	PAOZZ	E
3−61		**	85062−01	3	CONNECTOR ACCESSORIES	14933	2	PAOZZ	E

NOTE * : SITE DEPENDENT
NOTE ** : NOT SHOWN

FIGURE AND INDEX NO.	REF DES		PART NUMBER	INDENT	DESCRIPTION	CAGE CODE	QTY PER ASSY	CODES SMR	CODES USABLE ON
3−62		**	M85049/48−2−1	3	SHIELD, CONNECTOR	81349	2	PAOZZ	E
3−63		**	MS3420−6A	3	ADAPTER	96906	2	PAOZZ	E
3−64		**	MS3420−16A	3	ADAPTER	96906	3	PAOZZ	E
3−65		**	MS25036−102	3	TERMINAL LUG (98410) (ALT PN A532−06)	96906	2	PAOZZ	E
3−66		**	MS25036−148	3	TERMINAL LUG	96906	4	PAOZZ	E
3−67	2W27	**	1223870−301	2	CABLE ASSEMBLY	56232	1	PAOOO	E
3−68	2W27P1 2W27P3	**	MS3476W14−18S	3	CONNECTOR	96906	2	PAOZZ	E
3−69	2W27P2	**	MS3406D28−21PW	3	CONNECTOR	96906	1	PAOZZ	E
3−70	2HR1	*	BTU−10−2083TK−1AS−1	2	HEATER, SPACE, ELECTRIC, W/TK−1 THERMOSTAT OPTION AND AS−1 ANTI BIRD SCREEN OPTION (56232) (spec dwg 1214556−201)	22901	3	PAOOO	
3−71	2W28	* **	90−894−203	3	CABLE ASSEMBLY, RF (65474) (ALT PN G5N02N11072.0) (56232) (spec dwg 1213535−203)	57500	1	PAOZZ	
3−72	W227MP1	*	10−242999−62	3	BUSHING ELECTRICAL (55561) (ALT PN LV242999−62T10) (56232) (spec dwg 1215043−204)	77820	1	PAOZZ	
3−73	2HR1S1 2HR1S2	*	AS1037−001	3	SWITCH	22901	2	PAOZZ	
3−74	2HR1S3	*	AS1037−005	3	SWITCH, FAN	22901	1	PAOZZ	
3−75	2HR1K1	*	S353−208	3	CONTACTOR, CONTROL	22901	1	PAOZZ	
3−76	2HR1B1	*	AS1040−002	3	MOTOR, FAN	22901	1	PAOZZ	
3−77	2HR1H1 THRU 2HR1H3		AS1035−002	3	ELEMENT, HEATER	22901	3	PAOZZ	
3−78	2HR1S4	*	TK−1	2	SWITCH, THERMOSTAT	22901	1	PAOZZ	
3−79	2A14		43−456A	2	INTERCOM STATION, TELEPHONE AND 2−WAY INTERCOM SYSTEM (Replaces PN 43−616)	62676	1	PAOZZ	
	2A14		SPS−210	2	INTERCOM STATION, SOUND POWERED	56093	1	PAOZZ	
3−80	2MP1		ASG6X6X4	2	JUNCTION BOX, INTERCOM	00843	1	PAOZZ	

NOTE * : SITE DEPENDENT

NOTE ** : NOT SHOWN

FIGURE AND INDEX NO.	REF DES	PART NUMBER	INDENT	DESCRIPTION	CAGE CODE	QTY PER ASSY	CODES SMR	CODES USABLE ON
3−81	2TB1	Z274−658	3	TERMINAL BOARD, 4 POSITION	62676	1	PAOZZ	
3−82	2S1	JN422	2	SWITCH, HEATER, FUSED DISCONNECT	66842	1	PAOZZ	
3−83	2S1F1 **	FRN−R−40	2	FUSE, 40 AMP	71400	3	PAOZZ	
3−84	12A2	70020	2	RELAY, TOWER LIGHTING, WARNING LIGHT FAILURE DETECTION	18192	1	PAOZZ	
3−85		A−16N12B	2	JUNCTION BOX ASSEMBLY	00843	1	XB	
3−86	2A10 2A12	PR−14−2−100−1/4−9E	3	TEMPERATURE SENSOR	29907	2	PAOZZ	
3−87	2A11 2A13	T610−0026−CS	3	TEMPERATURE TRANSMITTER (When exhausted replace with (53651) (T713−0013))	53651	2	PAOZZ	
3−88	2T1	9T51B0028G03	3	TRANSFORMER, ISOLATION, 0.5 KVA, 120/240 VAC, 60HZ	24446	1	PAOZZ	
3−89	2S2	T631A1105	3	THERMOSTAT, RADOME VENT FAN (27319) (ALT PN T631A1022)	27319	1	PAOZZ	
3−90	2HR1B1S1	B100−S0B	3	MOTOR STARTER, COMBINATION MAGNETIC FUSIBLE DISCONNECT TYPE	97942	1	PAOZZ	
3−91	2HR1B1H2	FH43	3	HEATER (Used on colored radome sites for 1 HP fan motor)	65054	1	PAOZZ	
3−92	2W21 * **	1221797−306	2	CABLE ASSEMBLY	56232	1	PAOOO	G
3−93	2W21P1 **	MS3476W14−18S	3	CONNECTOR	96906	1	PAOZZ	G
3−94	**	MS85049/10−116W	3	BACKSHELL	81349	1	PAOZZ	G
3−95	2W21P2 **	MS3406D28−21PW	3	CONNECTOR	96906	1	PAOZZ	G
3−96	**	390AS001NF2806H6	3	BACKSHELL, CONNECTOR (56232) (spec dwg 1223746−201)	06324	1	PAOZZ	G
3−97	2W29 * **	1221797−304	2	CABLE ASSEMBLY	56232	1	PAOOO	F G
3−98	2W29P1 **	MS3478W14/14−18S	3	CONNECTOR	96906	1	PAOZZ	F G
3−99	**	MS85049/10−116W	3	BACKSHELL	81349	2	PAOZZ	F G

NOTE * : SITE DEPENDENT
NOTE ** : NOT SHOWN

FIGURE AND INDEX NO.	REF DES		PART NUMBER	INDENT	DESCRIPTION	CAGE CODE	QTY PER ASSY	CODES SMR	CODES USABLE ON
3−100	2W29P2	**	MS3476W14/10−116W	3	CONNECTOR	81349	1	PAOZZ	F G
3−101	2W30	* **	1221797−305	2	CABLE ASSEMBLY	56232	1	PAOOO	F
3−102	2W30P1	**	MS3478W14/14−18S	3	CONNECTOR	96906	1	PAOZZ	F
3−103		**	MS85049/10−116W	3	BACKSHELL	81349	2	PAOZZ	F
3−104	2W30P2	**	MS3476W14/10−116W	3	CONNECTOR	81349	1	PAOZZ	F
3−105	2W27	* **	1223870−302	2	CABLE ASSEMBLY	56232	1	PAOOO	F
3−106	2W27P1 2W27P3	**	MS3476W14−18S	3	CONNECTOR	96906	2	PAOZZ	F
3−107	2W27P2	**	MS3406D28−21PW	3	CONNECTOR	96906	1	PAOZZ	F

USABLE ON CODES

A − LIMITED PRODUCTION BASE ANTENNA/PEDESTAL
B − FULL SCALE PRODUCTION ANTENNA/PEDESTAL (LINEAR POLARIZATION)
C − LIMITED PRODUCTION TRAINING SITES ANTENNA/PEDESTAL
D − FULL SCALE PRODUCTION TRAINING SITES ANTENNA/PEDESTAL
E − REDUNDANT CONFIGURATION ANTENNA/PEDESTAL
F − REDUNDANT WITH POWER MONITOR FILTERS INSTALLED
G − SINGLE THREAD WITH POWER MONITOR FILTER INSTALLED

NOTE * : SITE DEPENDENT
NOTE ** : NOT SHOWN

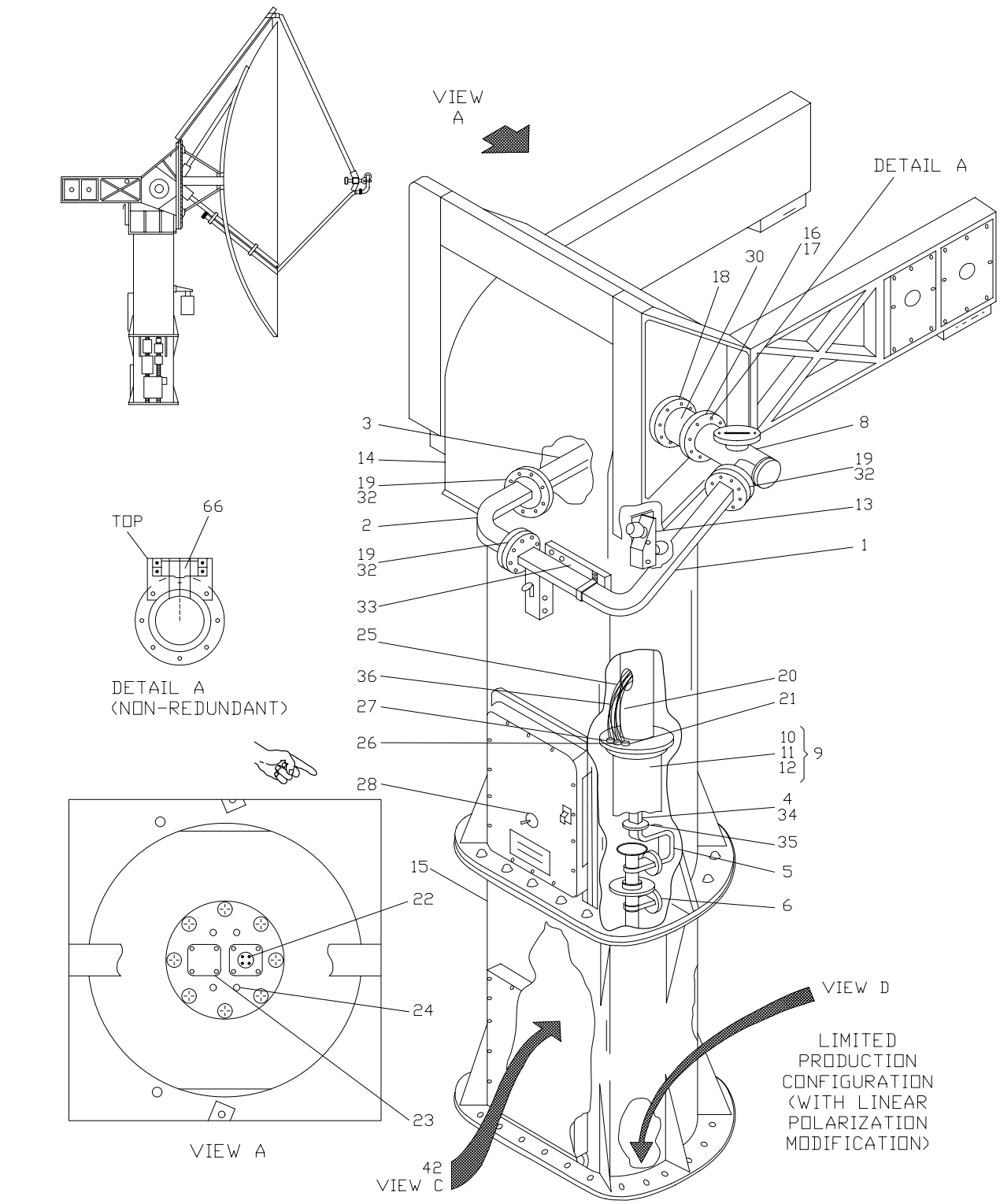

NX1120

FIGURE 4. Pedestal Assembly, UD2A1 (Sheet 1 of 4)

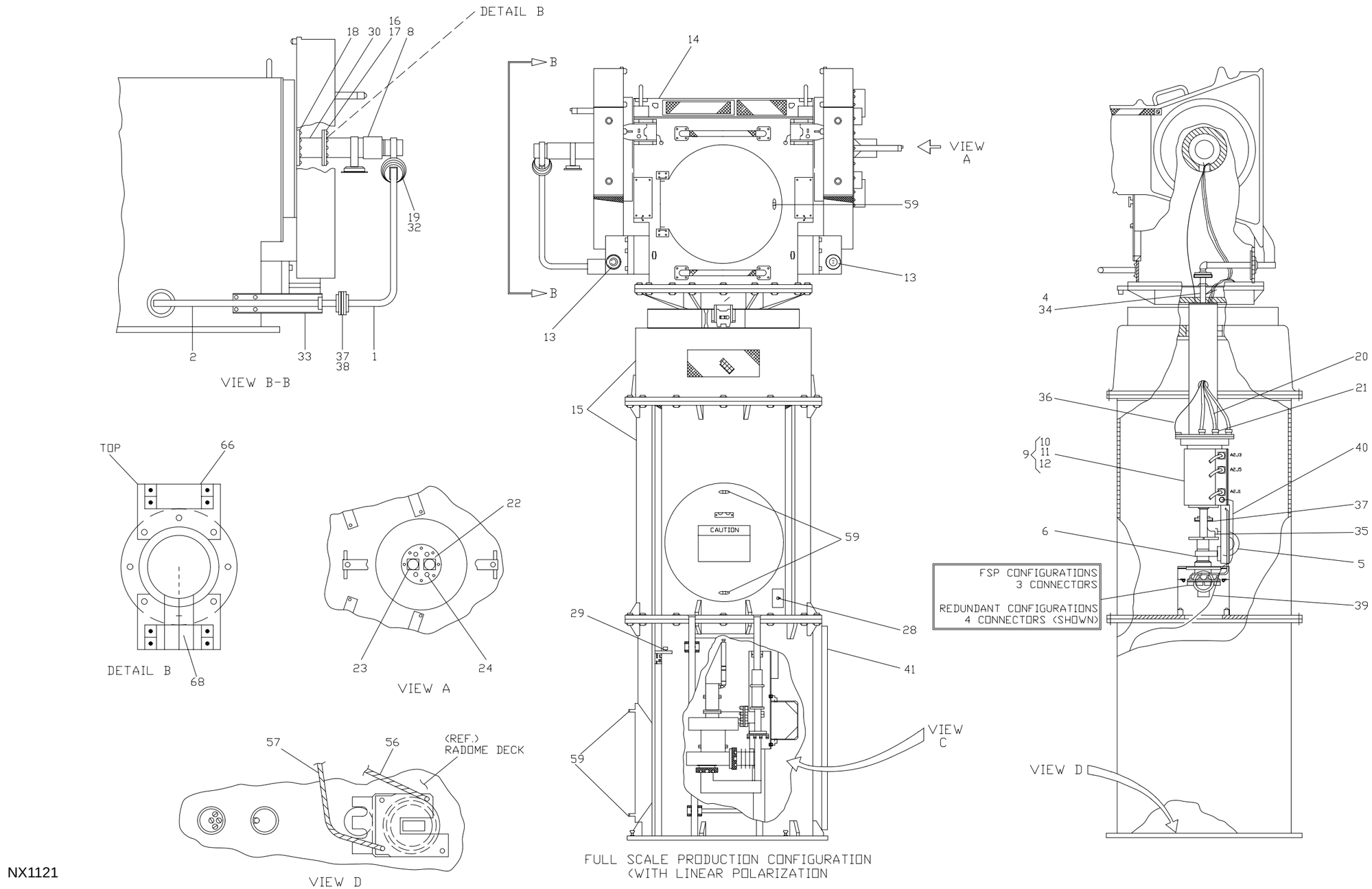

NX1121

FIGURE 4. Pedestal Assembly, UD2A1 (Sheet 2 of 4)

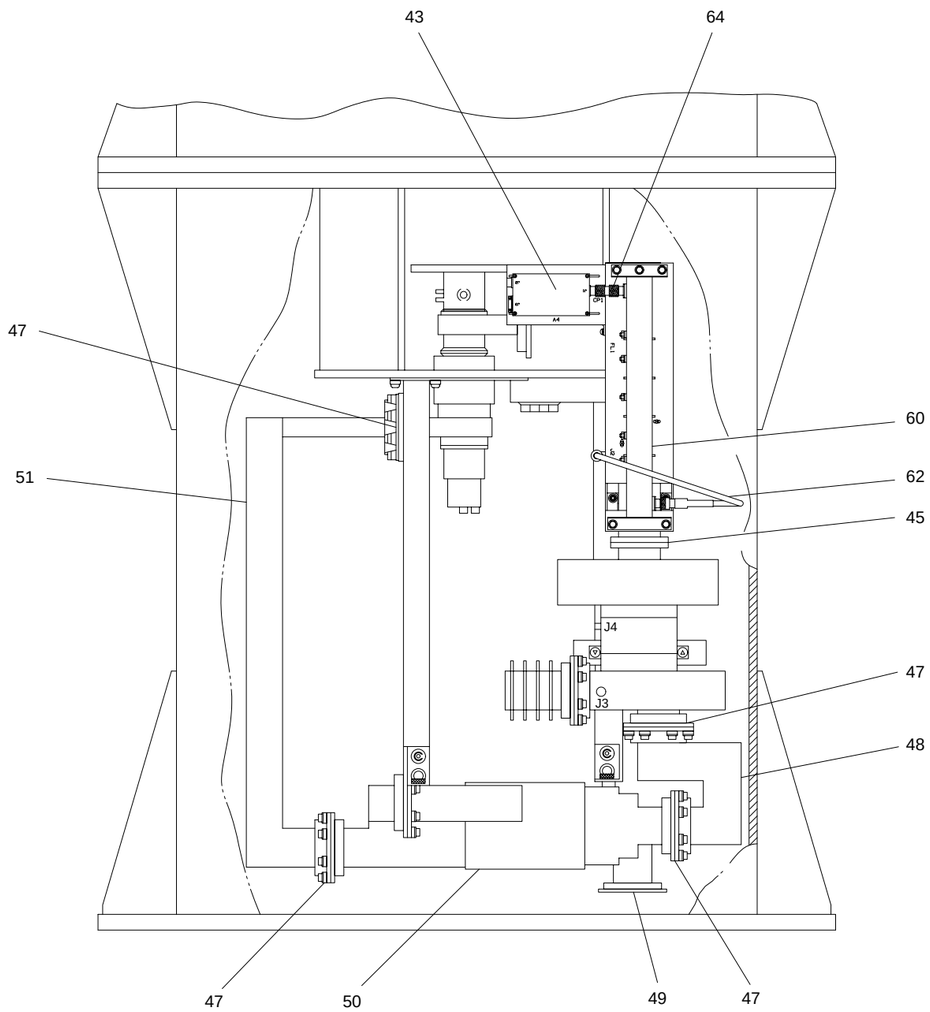

VIEW C

LIMITED PRODUCTION (WITH LINEAR POLARIZATION MODIFICATION)

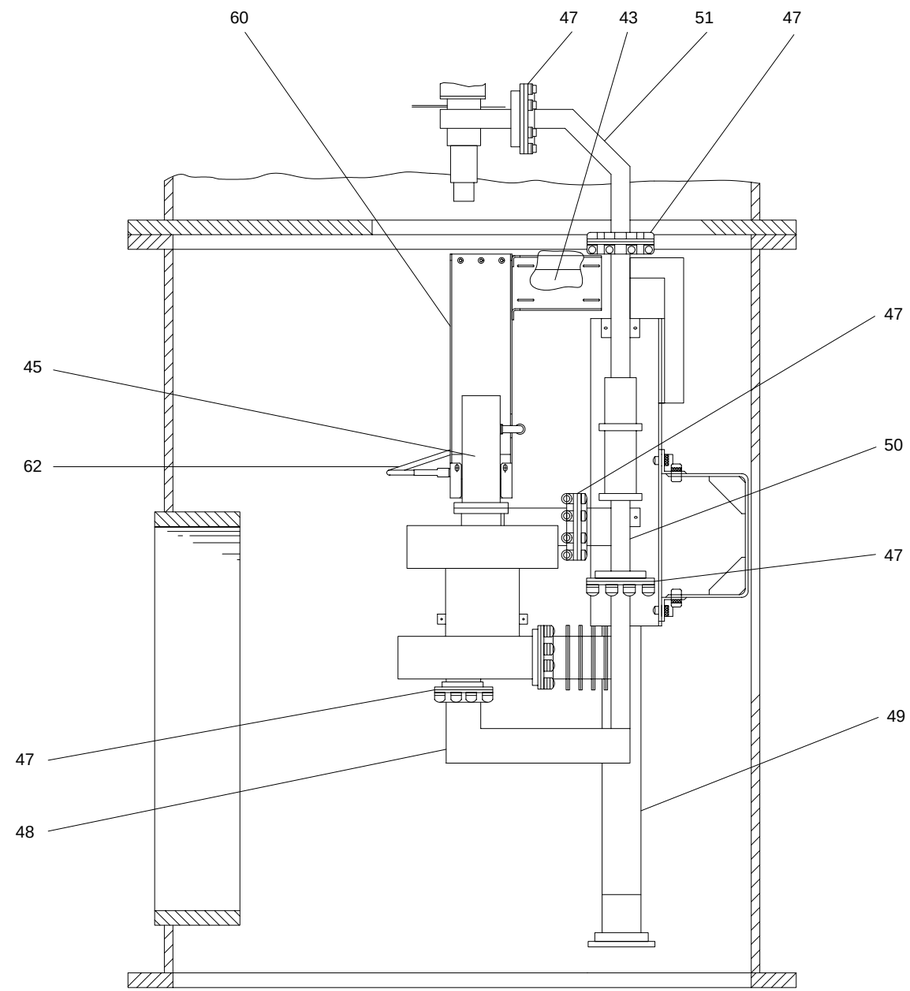

VIEW C

FULL SCALE PRODUCTION (LINEAR POLARIZATION)

NX1122

FIGURE 4. Pedestal Assembly, UD2A1 (Sheet 3 of 4)

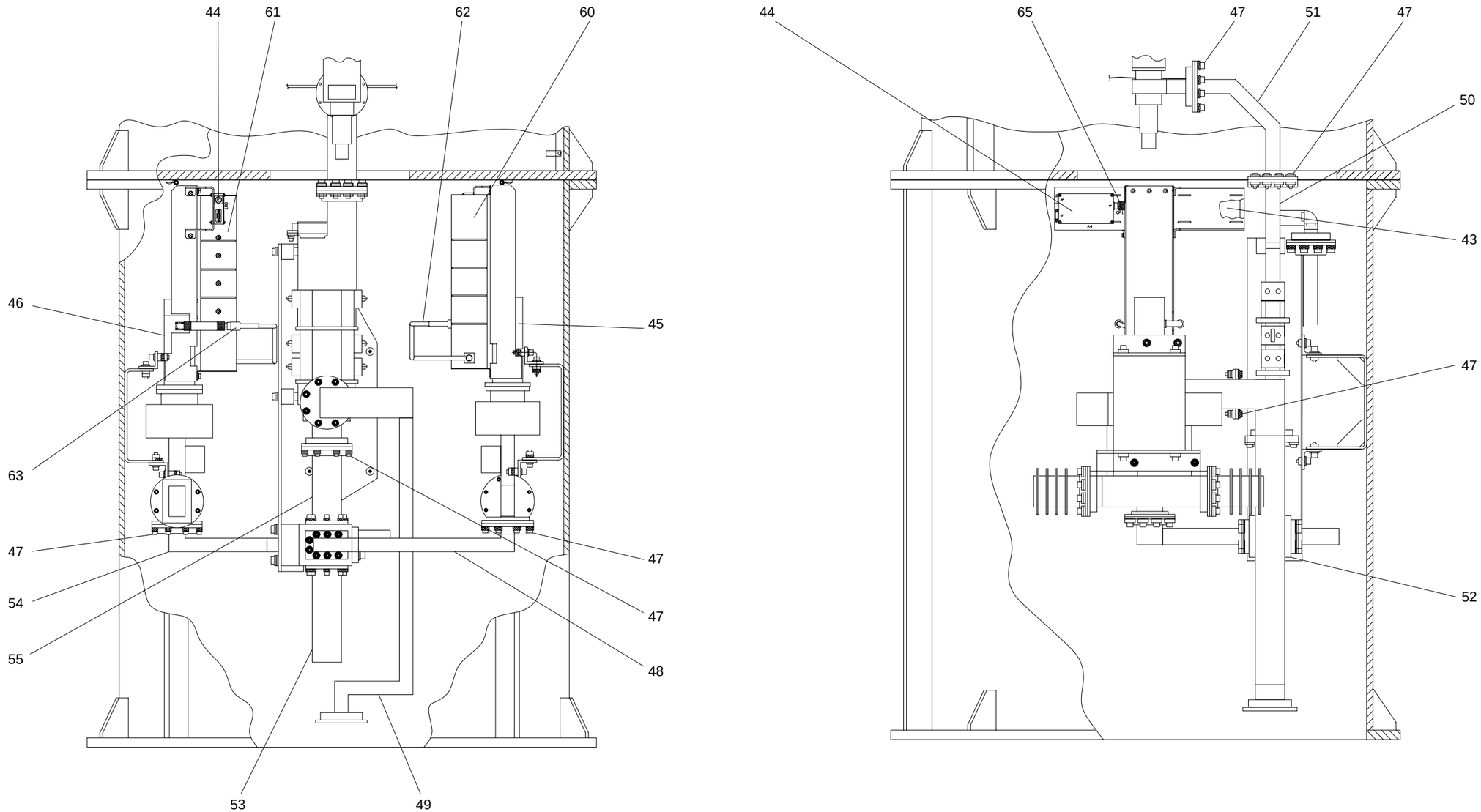

VIEW C

REDUNDANT CONFIGURATION (LINEAR POLARIZATION)

NX1123

FIGURE 4. Pedestal Assembly, UD2A1 (Sheet 4 of 4)

FIGURE AND INDEX NO.	REF DES	PART NUMBER	INDENT	DESCRIPTION	CAGE CODE	QTY PER ASSY	CODES SMR	CODES USABLE ON
4−	2A1	54636−1001−101	1	PEDESTAL ASSEMBLY, LPP (For NHA see FIGURE 3 on Page 2 − 57)	1M813	REF	PBFDD	A
	2A1	40505−1001−101	1	PEDESTAL ASSEMBLY, FSP (For NHA see FIGURE 3 on Page 2 − 57)	1M813	REF	PBFDD	B
	2A1	40505−1001−102	1	PEDESTAL ASSEMBLY, REDUNDANT (For NHA see FIGURE 3 on Page 2 − 57)	1M813	REF	PBFDD	C
4−1	2A1WG5	54636−5005−1	2	WAVEGUIDE, ELEVATION ROTARY JOINT	1M813	1	PAOZZ	
				(ATTACHING PARTS)				
		MS16995−52	2	SCREW	96906	8	PAOZZ	
		MS35338−139	2	WASHER	96906	8	PAOZZ	
		MS15795−810	2	WASHER	96906	8	PAOZZ	
				− − − − − − − − −				
4−2	2A1WG4	44636−5014−1	2	EXTENDER, WAVEGUIDE	1M813	1	PAOZZ	
				(ATTACHING PARTS)				
		MS16995−54	2	SCREW	96906	8	PAOZZ	
		MS15795−810	2	WASHER	96906	8	PAOZZ	
				− − − − − − − − −				
4−3	2A1WG3	44636−5006−1	2	WAVEGUIDE, ELEVATION HOUSING	1M813	1	PAOZZ	
				(ATTACHING PARTS)				
		MS16995−52	2	SCREW	96906	8	PAOZZ	
		MS35338−139	2	WASHER	96906	8	PAOZZ	
		MS15795−810	2	WASHER	96906	8	PAOZZ	
				− − − − − − − − −				
4−4	2A1WG2	34636−5008−1	2	WAVEGUIDE, STRAIGHT	1M813	1	PAOZZ	A
	2A1WG2	34636−5008−2	2	WAVEGUIDE, STRAIGHT	1M813	1	PAOZZ	B C
				(ATTACHING PARTS)				
		MS16995−52	2	SCREW	96906	8	PAOZZ	
		MS35338−57	2	WASHER	96906	8	PAOZZ	
		MS15795−810	2	WASHER	96906	8	PAOZZ	
				− − − − − − − − −				

NOTE * : SITE DEPENDENT
NOTE ** : NOT SHOWN
NOTE *** : THIS PART IS A NON−STOCK LISTED ITEM. IF IT BREAKS, USE THE FOLLOWING PART; LEVEL, MECHANICS IMPROVED, P/N 98−12, CAGE 57163

FIGURE AND INDEX NO.	REF DES	PART NUMBER	INDENT	DESCRIPTION	CAGE CODE	QTY PER ASSY	CODES SMR	CODES USABLE ON
4−5	2A1WG1	44636−5010−1	2	WAVEGUIDE, AZIMUTH S−PIECE ROTARY JOINT	1M813	1	PAOZZ	
				(ATTACHING PARTS)				
		MS16995−53	2	SCREW	96906	8	PAOZZ	
		MS35338−139	2	WASHER	96906	8	PAOZZ	
		MS15795−810	2	WASHER	96906	8	PAOZZ	
				− − − − − − − − −				
4−6	2A1A4	2400−A−01	2	ROTARY JOINT, WAVEGUIDE, AZIMUTH (25634) (ALT PN 1213623−201) (56232) (spec dwg 1213623−201) (01882) (ALT PN 1213623−201) (60809) (ALT PN 1213623−201)	15870	1	PAOLD	
				(ATTACHING PARTS)				
		MS16995−67	2	SCREW	96906	8	PAOZZ	
		MS35338−140	2	WASHER	96906	8	PAOZZ	
		MS15795−812	2	WASHER	96906	8	PAOZZ	
		MS90064−17	2	PACKING, PREFORMED	96906	1	PCOZZ	
				− − − − − − − − −				
4−7	**	34636−2086−101	2	DRIVE BRACKET, AZIMUTH ROTARY JOINT	1M813	1	PAOZZ	
4−8	2A1A5	RC13205	2	ROTARY JOINT, WAVEGUIDE, ELEVATION (25634) (ALT PN SK1343) (56232) (spec dwg 1213624−201)	60809	1	PAOLD	
				(ATTACHING PARTS)				
		MS16995−83	2	SCREW	96906	8	PAOZZ	
		MS35338−141	2	WASHER	96906	8	PAOZZ	
		MS15795−814	2	WASHER	96906	8	PAOZZ	
				− − − − − − − − −				
4−9	2A1A2	E2263−00−1	2	RING, ELECTRICAL, SLIP RING CONTACT ASSEMBLY (56232) (spec dwg 1213618−201)	17399	1	PAODD	
				(ATTACHING PARTS)				
		MS16995−82	2	SCREW	96906	8	PAOZZ	

NOTE * : SITE DEPENDENT
NOTE ** : NOT SHOWN
NOTE *** : THIS PART IS A NON−STOCK LISTED ITEM. IF IT BREAKS, USE THE FOLLOWING PART; LEVEL, MECHANICS IMPROVED, P/N 98−12, CAGE 57163

FIGURE AND INDEX NO.	REF DES	PART NUMBER	INDENT	DESCRIPTION	CAGE CODE	QTY PER ASSY	CODES SMR	CODES USABLE ON
		MS35338−141	2	WASHER	96906	8	PAOZZ	
		NAS1149C0663R	2	WASHER	80205	8	PAOZZ	
				− − − − − − − − −				
4−10	2A1A2A1	D2263−23	3	POWER BLOCK ASSEMBLY	17399	1	PAOZZ	
4−11	2A1A2A2	C2263−20−1	3	SIGNAL BLOCK ASSEMBLY, ODD	17399	2	PAOZZ	
4−12	2A1A2A3	C2263−20−2	3	SIGNAL BLOCK ASSEMBLY, EVEN	17399	2	PAOZZ	
4−13	2A1MP1 THRU 2A1MP8	GBA−18	2	BUMPER	06623	8	PCOZZ	A
	2A1MP1 2A1MP2	GBA−20	2	BUMPER	06623	2	PCOZZ	B C
4−14	2A1A1	54636−1202−101	2	ELEVATION ASSEMBLY, LPP (For breakdown see FIGURE 5 on Page 2 − 90)	1M813	1	PBFDD	A
	2A1A1	40505−1202−101	2	ELEVATION ASSEMBLY, FSP/REDUNDANT (For breakdown see FIGURE 5 on Page 2 − 90)	1M813	1	PBFDD	B C
4−15	2A1A3	54636−1201−101	2	AZIMUTH ASSEMBLY, LPP (For breakdown see FIGURE 8 on Page 2 − 102)	1M813	1	PBFDD	A
	2A1A3	40505−1201−101	2	AZIMUTH ASSEMBLY, FSP/REDUNDANT (For breakdown see FIGURE 9 on Page 2 − 107)	1M813	1	PBFDD	B C
4−16		24636−5004−1	2	PACKING, PREFORMED	26795	2	PCOZZ	
4−17	2A1MS4	2−370N674−70	2	O−RING	02697	1	PCOZZ	A
4−18	2A1MS3	2−259N674−70	2	O−RING	02697	1	PCOZZ	B C
4−19		MS90064−17	2	PACKING, PREFORMED	96906	9	PCOZZ	
4−20	2A1W1	34636−1104−101	2	CABLE ASSEMBLY	1M813	1	PAOOO	A
	2A1W1	30505−1107−101	2	CABLE ASSEMBLY	1M813	1	PAOOO	B C
4−21	2A1W1P1	MS3456W28−21PW	3	CONNECTOR	96906	1	PAOZZ	
4−22	2A1J2	MS3102R28−21SW	3	CONNECTOR	96906	1	PAOZZ	

NOTE * : SITE DEPENDENT
NOTE ** : NOT SHOWN
NOTE *** : THIS PART IS A NON−STOCK LISTED ITEM. IF IT BREAKS, USE THE FOLLOWING PART; LEVEL, MECHANICS IMPROVED, P/N 98−12, CAGE 57163

FIGURE AND INDEX NO.	REF DES	PART NUMBER	INDENT	DESCRIPTION	CAGE CODE	QTY PER ASSY	CODES SMR	CODES USABLE ON
4−23		10−40450−28	2	GASKET, CONNECTOR (77820) (ALT PN 10−36675−28)	02660	2	PCOZZ	
4−24	2A1J3 THRU 2A1J6	M55339/04−00030	2	ADAPTER	81349	4	PAOZZ	
4−25	2A1W2	34636−1112−101	2	CABLE ASSEMBLY	1M813	1	PAOOO	A
4−26	2A1W2P5	MS3456W20−16S	3	CONNECTOR	96906	1	PAOZZ	A
4−27	2A1W2P2	MS3456W22−22P	3	CONNECTOR	96906	1	PAOZZ	A
4−28	2A1A3S1	MS24658−22D	2	SWITCH, SAFETY INTERLOCK	96906	1	PAOZZ	
4−29	***	1138−20	2	VIAL, LEVELING	06995	1	PAOZZ	B
				(ATTACHING PARTS)				
		MS16997−11	2	SCREW	96906	6	PAOZZ	B
		MS9320−05	2	WASHER	96906	6	PAOZZ	B
				− − − − − − − − −				
4−30	2A1WG10	44636−2138−1	2	ADAPTER, ELEVATION ROTARY JOINT	1M813	1	PAOLD	
4−31	**	30505−2064−1	2	SHIM, ROTARY JOINT, EL ADAPTER	1M813	1	PAOZZ	
4−32		34636−2117−1	2	SHIM	26795	3	PAOZZ	
4−33		34636−2109−101	2	CLAMP, EL WAVEGUIDE	1M813	1	PAOZZ	A
		34636−2109−102	2	CLAMP, EL WAVEGUIDE	1M813	1	PAOZZ	B
				(ATTACHING PARTS)				
		MS16995−63	2	SCREW	96906	2	PAOZZ	
		MS35338−140	2	WASHER	96906	2	PAOZZ	
		MS15795−812	2	WASHER	96906	2	PAOZZ	
				− − − − − − − − −				
4−34		34636−2087−101	2	CLAMP, STR WAVEGUIDE	1M813	1	PAOZZ	
				(ATTACHING PARTS)				
		MS16995−67	2	SCREW	96906	2	PAOZZ	
		MS35338−140	2	WASHER	96906	2	PAOZZ	
		AN960C516	2	WASHER	81352	2	PAOZZ	
				− − − − − − − − −				
4−35	2A1E1	34636−2119−101	2	CLAMP, AZ ROTARY JOINT	1M813	1	PAOZZ	

NOTE * : SITE DEPENDENT
NOTE ** : NOT SHOWN
NOTE *** : THIS PART IS A NON−STOCK LISTED ITEM. IF IT BREAKS, USE THE FOLLOWING PART; LEVEL, MECHANICS IMPROVED, P/N 98−12, CAGE 57163

FIGURE AND INDEX NO.	REF DES	PART NUMBER	INDENT	DESCRIPTION	CAGE CODE	QTY PER ASSY	CODES SMR	CODES USABLE ON
				(ATTACHING PARTS)				
		MS16995−72	2	SCREW	96906	2	PAOZZ	
		MS35338−140	2	WASHER	81352	2	PAOZZ	
		AN960C516	2	WASHER	81352	2	PAOZZ	
				− − − − − − − − −				
4−36		34636−2118−101	2	CABLE, GROUNDING	1M813	1	PAOOO	A
		30505−1109−101	2	CABLE, GROUNDING	1M813	1	PAOOO	B
				(ATTACHING PARTS)				
		MS16995−79	2	SCREW	96906	1	PAOZZ	
		MS35338−141	2	WASHER	96906	1	PAOZZ	
		NAS1149C0663R	2	WASHER	80205	1	PAOZZ	
				− − − − − − − − −				
4−37		30505−2053−1	2	SHIM	1M813	2	PAOZZ	B
4−38		MS90064−17	2	PACKING, PREFORMED	96906	9	PCOZZ	B
4−39		34636−2118−102	2	CABLE, GROUNDING	1M813	1	XB	B
4−40		34636−2118−103	2	CABLE, GROUNDING	1M813	1	XB	B
4−41		40505−2008−101	2	RISER	1M813	1	PAOZZ	B
		40505−2008−102	2	RISER	1M813	1	PAOZZ	C
				(ATTACHING PARTS)				
		MS90728−192	2	SCREW	96906	12	PAOZZ	B
		MS9320−17	2	WASHER	96906	24	PAOZZ	B
		MS51967−24	2	NUT	96906	12	PAOZZ	B
				− − − − − − − − −				
4−42	**	44636−1007−101	2	LINEAR POLARIZATION WAVEGUIDE FIELD ASSEMBLY	1M813	1	PAOLD	A
	**	40505−1212−101	2	LINEAR POLARIZATION WAVEGUIDE FIELD ASSEMBLY	1M813	1	PAOLD	B
	**	40505−1213−101	2	LINEAR POLARIZATION WAVEGUIDE FIELD ASSEMBLY	1M813	1	PAOLD	C
4−43	2A4	RF1784B	3	AMPLIFIER, RF, LOW NOISE (56232) (spec dwg 1213674−201)	50311	1	PAOLD	

NOTE * : SITE DEPENDENT
NOTE ** : NOT SHOWN
NOTE *** : THIS PART IS A NON−STOCK LISTED ITEM. IF IT BREAKS, USE THE FOLLOWING PART; LEVEL, MECHANICS IMPROVED, P/N 98−12, CAGE 57163

FIGURE AND INDEX NO.	REF DES	PART NUMBER	INDENT	DESCRIPTION	CAGE CODE	QTY PER ASSY	CODES SMR	CODES USABLE ON
				(ATTACHING PARTS)				
		MS51957−35	3	SCREW	96906	8	PAOZZ	
		MS35338−136	3	WASHER	96906	8	PAOZZ	
		MS15795−805	3	WASHER	96906	8	PAOZZ	
				− − − − − − − − −				
4−44	2A8	RF1784B	3	AMPLIFIER, RF, LOW NOISE (56232) (spec dwg 1213674−201)	50311	1	PAOLD	C
				(ATTACHING PARTS)				
		MS51957−35	3	SCREW	96906	8	PAOZZ	C
		MS35338−136	3	WASHER	96906	8	PAOZZ	C
		MS15795−805	3	WASHER	96906	8	PAOZZ	C
				− − − − − − − − −				
4−45	2A3	AMC0851	3	RECEIVER PROTECTOR (Supplied with passive limiter) (28916) (PN AMC1164) (56232) (spec dwg 1213627−201)	28916	1	PAOLD	
	2A7	AMC0851	3	RECEIVER PROTECTOR (Supplied with passive limiter) (28916) (PN AMC1164) (56232) (spec dwg 1213627−201)	28916	1	PAOLD	C
				(ATTACHING PARTS)				
		MS16995−50	3	SCREW	96906	4	PAOZZ	A B
		MS16995−50	3	SCREW	96906	8	PAOZZ	C
		MS35338−139	3	WASHER	96906	4	PAOZZ	A B
		MS35338−139	3	WASHER	96906	8	PAOZZ	C
		MS9320−10	3	WASHER	96906	4	PAOZZ	A B
		MS9320−10	3	WASHER	96906	8	PAOZZ	C
				− − − − − − − − −				
4−46	2A3A1 **	AMC1164	4	PASSIVE LIMITER	28916	1	PAOZZ	
	2A7A1 **	AMC1164	4	PASSIVE LIMITER	28916	1	PAOZZ	C
4−47		MS90064−17	3	PACKING, PREFORMED	96906	5	PCOZZ	

NOTE * : SITE DEPENDENT
NOTE ** : NOT SHOWN
NOTE *** : THIS PART IS A NON−STOCK LISTED ITEM. IF IT BREAKS, USE THE FOLLOWING PART; LEVEL, MECHANICS IMPROVED, P/N 98−12, CAGE 57163

FIGURE AND INDEX NO.	REF DES	PART NUMBER	INDENT	DESCRIPTION	CAGE CODE	QTY PER ASSY	CODES SMR	CODES USABLE ON
4−48	2A1WG3	34636−5019−1	3	WAVEGUIDE, CIRCULATOR−TO−RECEIVER PROTECTOR	1M813	1	PAOZZ	A
	2A1WG3	40505−5001−1	3	WAVEGUIDE, CIRCULATOR−TO−RECEIVER PROTECTOR	1M813	1	PAOZZ	B
	2A1WG3	40505−5005−1	3	WAVEGUIDE, RECEIVER PROTECTOR, SWITCH RIGHT	1M813	1	PAOZZ	C
				(ATTACHING PARTS)				
		MS16995−50	3	SCREW	96906	8	PAOZZ	A C
		MS35338−139	3	WASHER	96906	8	PAOZZ	A C
		MS15795−810	3	WASHER	96906	8	PAOZZ	A
		MS16995−53	3	SCREW	96906	8	PAOZZ	B
		MS35338−139	3	WASHER	96906	8	PAOZZ	B
		MS9320−10	3	WASHER	96906	8	PAOZZ	B C
		MS51971−1	3	NUT	96906	8	PAOZZ	B
				− − − − − − − − −				
4−49	2A1WG4	34636−5020−1	3	WAVEGUIDE, CIRCULATOR−TO−TOWER PROTECTOR	1M813	1	PAOZZ	A
	2A1WG4	40505−5002−1	3	WAVEGUIDE, CIRCULATOR−TO−TOWER PROTECTOR	1M813	1	PAOZZ	B
	2A1WG4	40505−5004−1	3	WAVEGUIDE, CIRCULATOR−TO−TOWER PROTECTOR	1M813	1	PAOZZ	C
				(ATTACHING PARTS)				
		MS16995−50	3	SCREW	96906	8	PAOZZ	A
		MS16995−53	3	SCREW	96906	8	PAOZZ	B C
		MS35338−139	3	WASHER	96906	8	PAOZZ	
		MS15795−810	3	WASHER	96906	8	PAOZZ	
				− − − − − − − − −				
4−50	2A1WG05	1213630−202	3	CIRCULATOR, RF (28916) (ALT PN 2367−A−01) (56232) (spec dwg 1213630−202)	96341	1	PAOLD	
				(ATTACHING PARTS)				
		MS16995−53	3	SCREW	96906	8	PAOZZ	

NOTE * : SITE DEPENDENT
NOTE ** : NOT SHOWN
NOTE *** : THIS PART IS A NON−STOCK LISTED ITEM. IF IT BREAKS, USE THE FOLLOWING PART; LEVEL, MECHANICS IMPROVED, P/N 98−12, CAGE 57163

FIGURE AND INDEX NO.	REF DES	PART NUMBER	INDENT	DESCRIPTION	CAGE CODE	QTY PER ASSY	CODES SMR	CODES USABLE ON
		MS35338−139	3	WASHER	96906	8	PAOZZ	
		MS9320−10	3	WASHER	96906	16	PAOZZ	
		MS51971−1	3	NUT	96906	8	PAOZZ	
				− − − − − − − − −				
4−51		44636−5021−1	3	WAVEGUIDE, ROTARY JOINT−TO−CIRCULATOR	1M813	1	PAOZZ	A
		30505−5003−1	3	WAVEGUIDE, ROTARY JOINT−TO−CIRCULATOR	26795	1	PAOZZ	B C
				(ATTACHING PARTS)				
		MS16995−50	3	SCREW	96906	8	PAOZZ	
		MS35338−139	3	WASHER	96906	8	PAOZZ	
		MS9320−10	3	WASHER	96906	8	PAOZZ	
				− − − − − − − − −				
4−52	2A1S1 *	SM2−641	3	WAVEGUIDE SWITCH (56232) (spec dwg 1213657−201)	53263	1	PAOLD	C
	2A1S1 *	SM2−641−1	3	WAVEGUIDE SWITCH (56232) (spec dwg 1213657−202)	53263	1	PAOLD	C
	2A1S1 *	SM2−641−2	3	WAVEGUIDE SWITCH (56232) (spec dwg 1213657−203)	53263	1	PAOLD	C
				(ATTACHING PARTS)				
		91251A552	3	SCREW, SH Cap, 1/4−20	39428	4	PAOZZ	C
		MS35338−139	3	WASHER	96906	4	PAOZZ	C
		MS9320−10	3	WASHER	96906	4	PAOZZ	C
				− − − − − − − − −				
4−53		20728−P1	3	DUMMY LOAD, ELECTRICAL WAVEGUIDE, LOW POWER (56232) (spec dwg 1213659−202)	00443	1	PAOZZ	C
				(ATTACHING PARTS)				
		MS16995−51	3	SCREW	96906	10	PAOZZ	C
		MS35338−139	3	WASHER	96906	10	PAOZZ	C
		MS9320−10	3	WASHER	96906	10	PAOZZ	C
				− − − − − − − − −				

NOTE * : SITE DEPENDENT
NOTE ** : NOT SHOWN
NOTE *** : THIS PART IS A NON−STOCK LISTED ITEM. IF IT BREAKS, USE THE FOLLOWING PART; LEVEL, MECHANICS IMPROVED, P/N 98−12, CAGE 57163

FIGURE AND INDEX NO.	REF DES	PART NUMBER	INDENT	DESCRIPTION	CAGE CODE	QTY PER ASSY	CODES SMR	CODES USABLE ON
4−54	2A1WG06	40505−5006−1	3	WAVEGUIDE, RECEIVER, PROTECTOR−TO−WAVEGUIDE SWITCH, LEFT	1M813	1	PAOZZ	C
				(ATTACHING PARTS)				
		MS16995−50	3	SCREW	96906	8	PAOZZ	C
		MS35338−139	3	WASHER	96906	8	PAOZZ	C
		MS9320−10	3	WASHER	96906	8	PAOZZ	C
				− − − − − − − − −				
4−55	2A1WG07	30505−5007−1	3	WAVEGUIDE, CIRCULATOR−TO−WAVEGUIDE SWITCH	1M813	1	PAOZZ	C
				(ATTACHING PARTS)				
		MS16995−50	3	SCREW	96906	10	PAOZZ	C
		MS35338−139	3	WASHER	96906	10	PAOZZ	C
		MS9320−10	3	WASHER	96906	10	PAOZZ	C
				− − − − − − − − −				
4−56	**	1217074−319	2	GROUND STRAP	56232	1	PAOZZ	
4−57		1217823−307	2	CABLE ASSEMBLY, GROUNDING	56232	1	PAOZZ	
4−58	2A1A8 **	40505−2018−2	2	DOOR ASSEMBLY	1M813	1	XB	B C
				(ATTACHING PARTS)				
		MS51957−44	3	SCREW	96906	4	PAOZZ	
		MS35338−137	3	WASHER	96906	4	PAOZZ	
				− − − − − − − − −				
4−59	2A1A8MP1 **	E3−41−15	3	FASTENER, PAWL	94222	2	PAOZZ	B
4−60	2A1A3FL1−XXXX	2200010−XXX	2	FILTER, PRESELECT BANDPASS, LOW LOSS	0WY55	1	PAOLD	A B
				(ATTACHING PARTS)				
		MS35308−305	2	SCREW CAP, HEXHD, CRE	96906	5	PAOZZ	A B
		MS35338−139	2	WASHER	96906	5	PAOZZ	A B
		MS15395−810	2	WASHER	96906	5	PAOZZ	A B
				− − − − − − − − −				

NOTE * : SITE DEPENDENT
NOTE ** : NOT SHOWN
NOTE *** : THIS PART IS A NON−STOCK LISTED ITEM. IF IT BREAKS, USE THE FOLLOWING PART; LEVEL, MECHANICS IMPROVED, P/N 98−12, CAGE 57163

FIGURE AND INDEX NO.	REF DES	PART NUMBER	INDENT	DESCRIPTION	CAGE CODE	QTY PER ASSY	CODES SMR	CODES USABLE ON
4−61	2A1A3FL2−XXXX	2200010−XXX	2	FILTER, PRESELECT BANDPASS, LOW LOSS	0WY55	1	PAOLD	C
				(ATTACHING PARTS)				
		MS35308−305	2	SCREW CAP, HEXHD, CRE	96906	5	PAOZZ	C
		MS35338−139	2	WASHER	96906	5	PAOZZ	C
		MS15395−810	2	WASHER	96906	5	PAOZZ	C
				− − − − − − − − −				
4−62	2W900	2200011−201	2	CABLE ASSEMBLY	0WY55	1	PAOZZ	A B
4−63	2W901	2200011−202	2	CABLE ASSEMBLY	0WY55	1	PAOZZ	C
4−64	2A1A3CP1	M55339/05−00057	2	ADAPTER CONNECTOR, COAX, RF	81349	1	PAOZZ	A B
4−65	2A1A3CP2	M55339/05−00057	2	ADAPTER CONNECTOR, COAX, RF	81349	1	PAOZZ	C
4−66	2A1FL1 *	RF15008	2	FILTER, RFI (POWER MONITOR) (59901) (ALT PN M1930) (56232) (spec dwg 1224384−201)	13619	2	PAOZZ	D E
				(ATTACHING PARTS)				
		MS51958−65	3	SCREW	96906	8	PAOZZ	D E
		MS15795−808	3	WASHER	96906	12	PAOZZ	D E
		MS35338−138	3	WASHER	96906	12	PAOZZ	D E
		MS35650−304	3	NUT	96906	8	PAOZZ	D
				− − − − − − − − −				
4−67	2A1MP12 **	1224356−101	3	MOUNTING PLATE	56232	2	PAOZZ	D E
4−68	2A1FL2 *	RF15008	2	FILTER, RFI (POWER MONITOR) (59901) (ALT PN M1930) (56232) (spec dwg 1224384−201)	13619	1	PAOZZ	D
				(ATTACHING PARTS)				
		MS51958−65	3	SCREW	96906	4	PAOZZ	D
		MS15795−808	3	WASHER	96906	6	PAOZZ	D

NOTE * : SITE DEPENDENT
NOTE ** : NOT SHOWN
NOTE *** : THIS PART IS A NON−STOCK LISTED ITEM. IF IT BREAKS, USE THE FOLLOWING PART; LEVEL, MECHANICS IMPROVED, P/N 98−12, CAGE 57163

Section II. Maintenance Parts List

FIGURE AND INDEX NO.	REF DES	PART NUMBER	INDENT	DESCRIPTION	CAGE CODE	QTY PER ASSY	CODES SMR	CODES USABLE ON
		MS35338−138	3	WASHER	96906	6	PAOZZ	D
		MS35650−304	3	NUT	96906	4	PAOZZ	D
				− − − − − − − − −				
4−69	2A1MP12 **	1224356−101	3	MOUNTING PLATE	56232	1	PAOZZ	D

USABLE ON CODES

A − LIMITED PRODUCTION

B − FULL SCALE PRODUCTION

C − REDUNDANT CONFIGURATION

D − REDUNDANT CONFIGURATION WITH POWER MONITOR FILTERS INSTALLED

E − SINGLE THREAD CONFIGURATION WITH POWER MONITOR FILTERS INSTALLED

NOTE * : SITE DEPENDENT

NOTE ** : NOT SHOWN

NOTE *** : THIS PART IS A NON−STOCK LISTED ITEM. IF IT BREAKS, USE THE FOLLOWING PART; LEVEL, MECHANICS IMPROVED, P/N 98−12, CAGE 57163

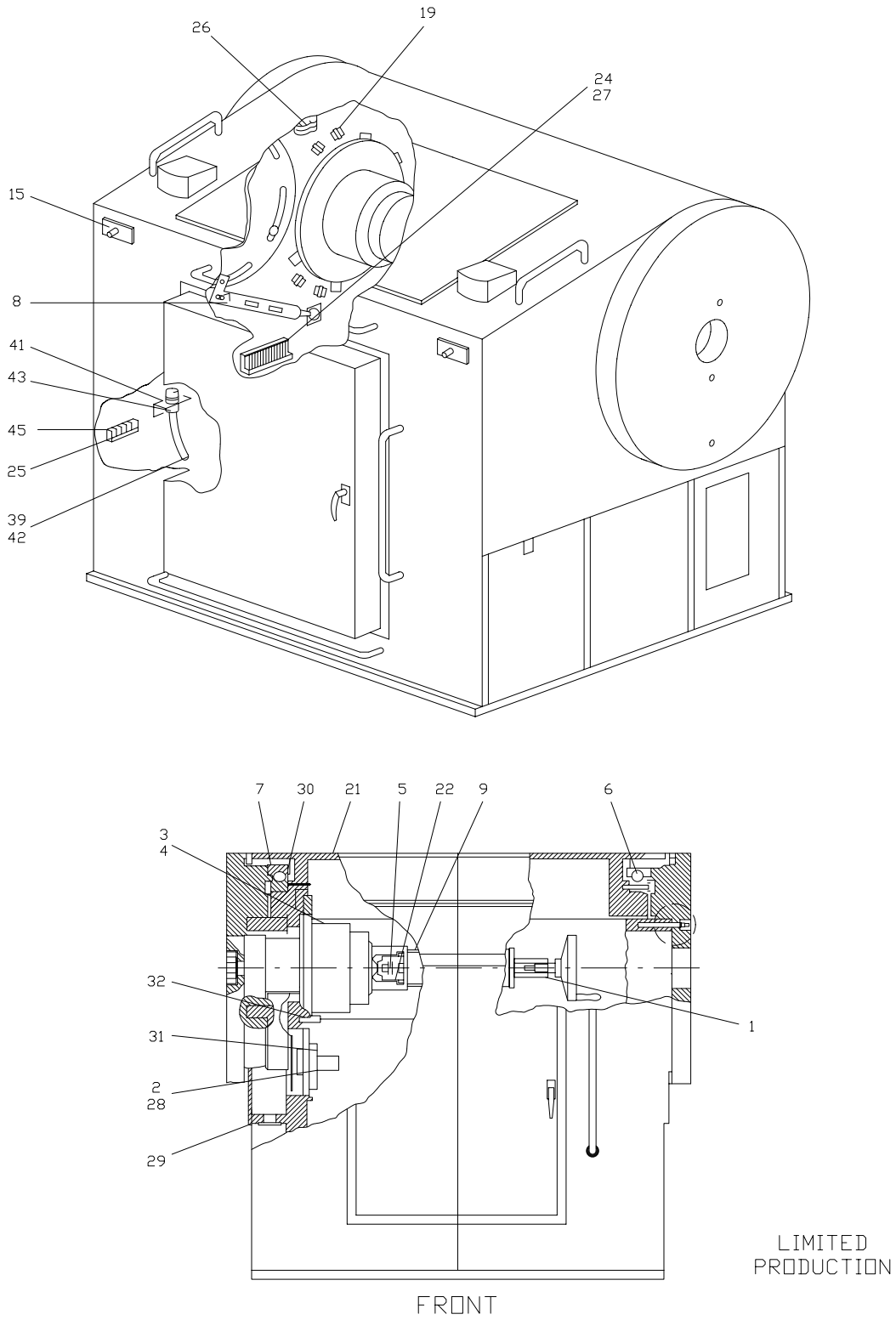

NX1124

FIGURE 5. Elevation Assembly, UD2A1A1 (Sheet 1 of 4)

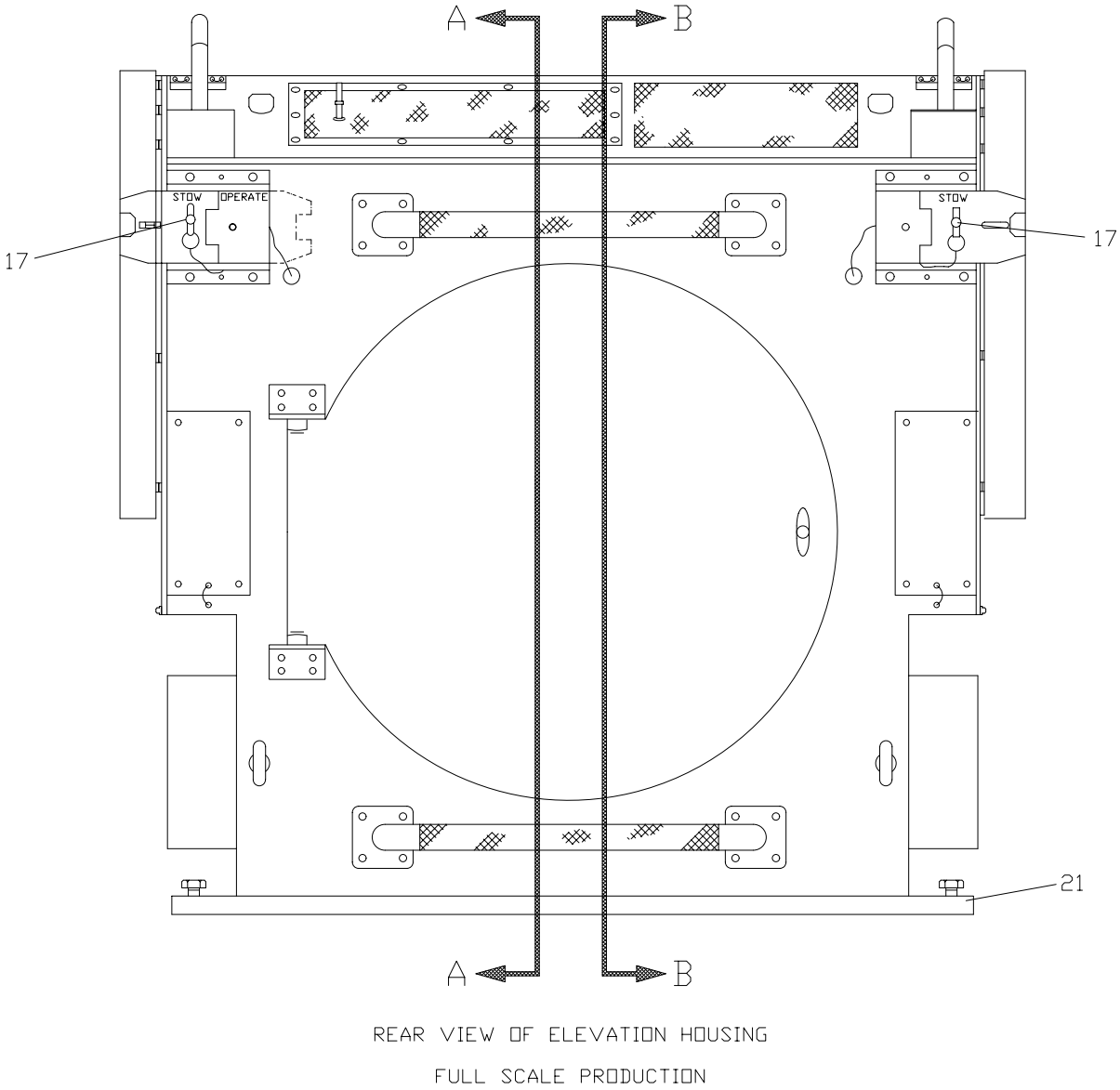

NX1125

FIGURE 5. Elevation Assembly, UD2A1A1 (Sheet 2 of 4)

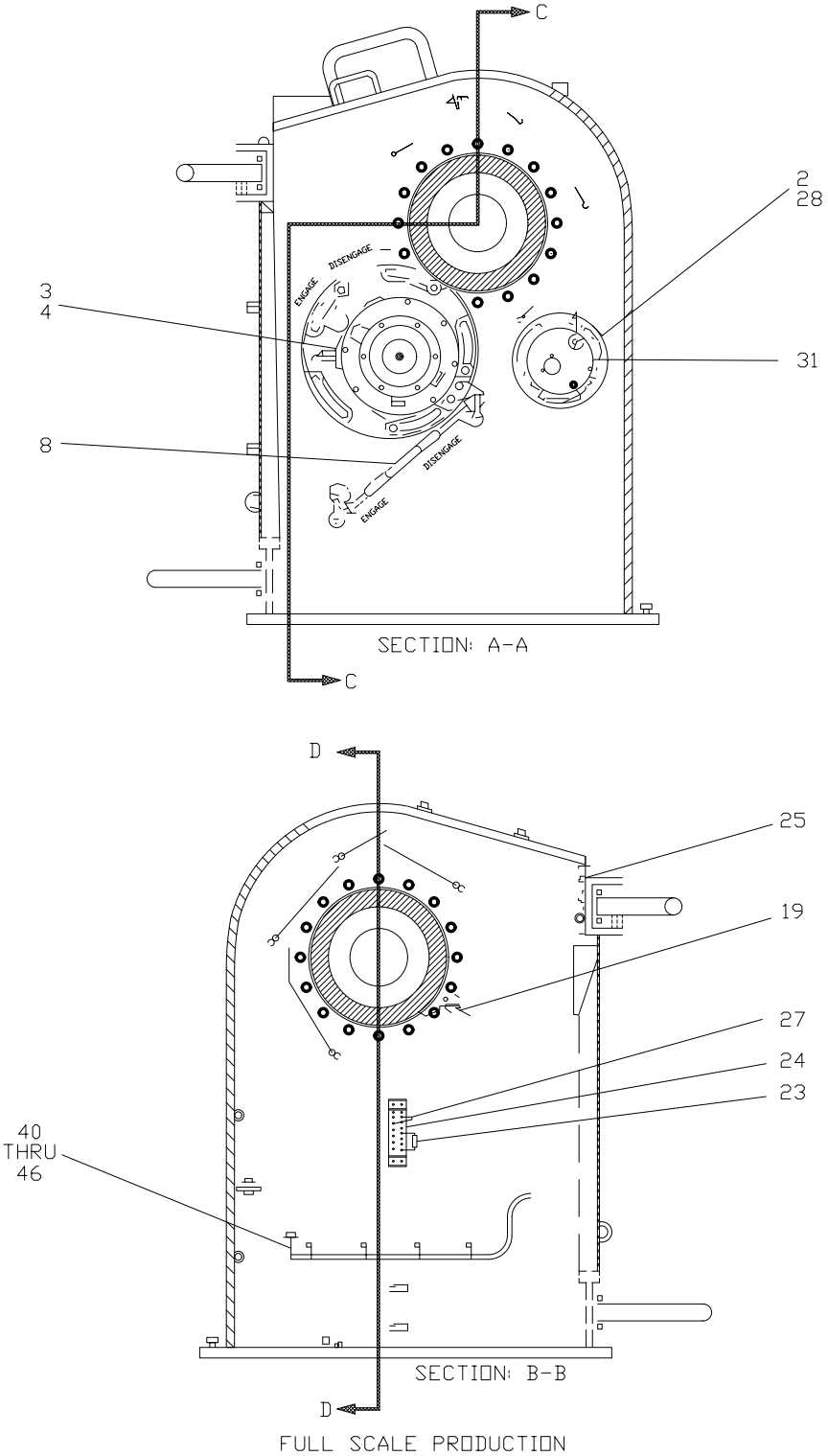

NX1126

FIGURE 5. Elevation Assembly, UD2A1A1 (Sheet 3 of 4)

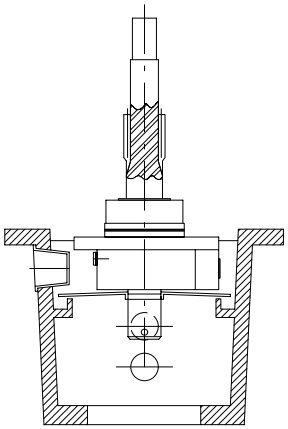

DETAIL A
HIGH SPEED CAP

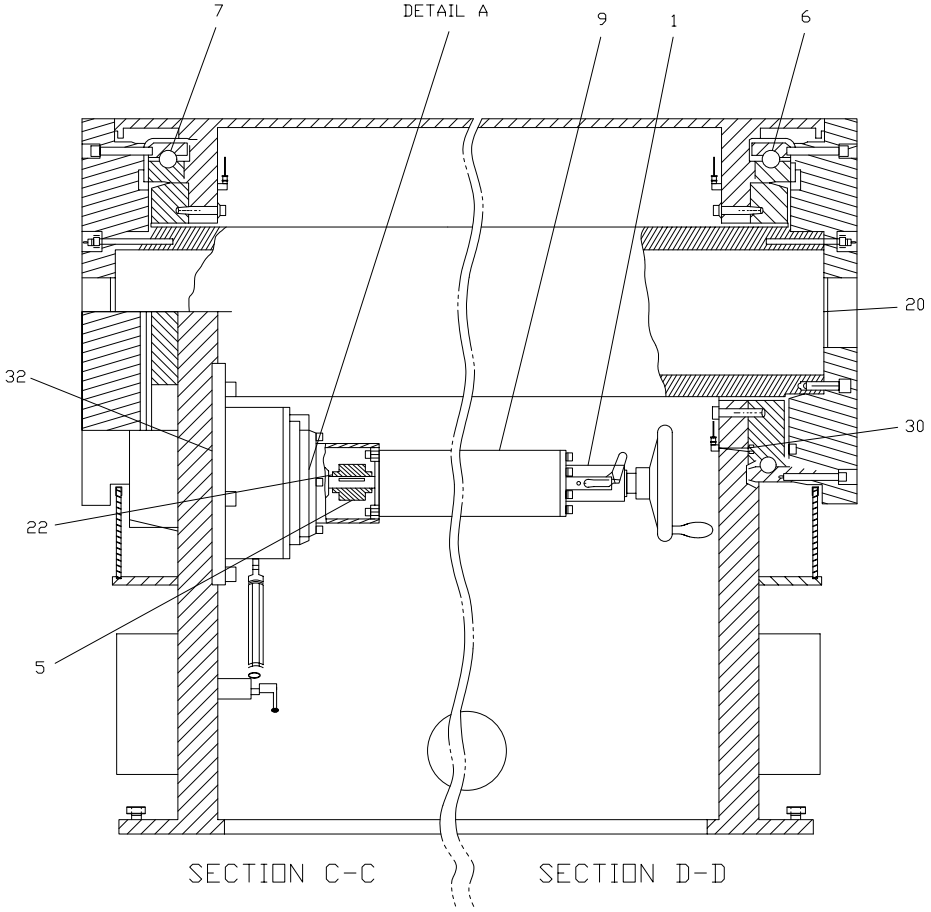

SECTION C-C SECTION D-D

CUT-AWAY VIEWS OF ELEVATION HOUSING

FULL SCALE PRODUCTION

NX1127

FIGURE 5. Elevation Assembly, UD2A1A1 (Sheet 4 of 4)

FIGURE AND INDEX NO.	REF DES	PART NUMBER	INDENT	DESCRIPTION	CAGE CODE	QTY PER ASSY	CODES SMR	CODES USABLE ON
5−	2A1A1	54636−1202−101	1	ELEVATION ASSEMBLY (For NHA see FIGURE 4 on Page 2 − 71)	1M813	REF	PBFDD	A
	2A1A1	40505−1202−101	1	ELEVATION ASSEMBLY (For NHA see FIGURE 4 on Page 2 − 71)	1M813	REF	PBFDD	B
5−1	2A1A1A1	54636−1204−101	2	MANUAL DRIVE ASSEMBLY (For breakdown see FIGURE 6 on Page 2 − 98)	1M813	1	PAODD	A
	2A1A1A1	54636−1204−102	2	MANUAL DRIVE ASSEMBLY (For breakdown see FIGURE 6 on Page 2 − 98)	1M813	1	PAODD	B
				(ATTACHING PARTS)				
		MS24677−19	2	SCREW	96906	6	PAOZZ	
		MS35338−137	2	WASHER	96906	6	PAOZZ	
		MS15795−807	2	WASHER	96906	6	PAOZZ	
				− − − − − − − − −				
5−2	2A1A1A2	54636−1211−102	2	DATA PACKAGE ASSEMBLY (For breakdown see FIGURE 7 on Page 2 − 100)	1M813	1	PAODD	
				(ATTACHING PARTS)				
		MS16995−51	2	SCREW	96906	3	PAOZZ	
		MS35338−139	2	WASHER	96906	3	PAOZZ	
		AN960C416	2	WASHER	88044	3	PAOZZ	
				− − − − − − − − −				
5−3	2A1A1RT1	4G2473	2	SENSOR, LEVEL, ELECTRO/OPTICAL	97484	1	PAOZZ	
5−4	2A1A1M3	MS28778−12	2	PACKING, PREFORMED	96906	1	PCOZZ	A
		MS28778−8	2	PACKING, PREFORMED	96906	1	PCOZZ	B
5−5	2A1A1A4	24636−2088−1	2	FLEXIBLE COUPLING (Supplied with 4 No.10 set screws)	1M813	1	PAOZZ	
5−6	2A1A1A5	1222R2	2	BEARING, RADIAL CONTACT, ELEVATION (1M813) (spec dwg 14636−5001−101)	0HRJ8	1	PAFLD	

NOTE * : NOT SHOWN

NOTE ** : FOR SITES WHERE THE OPERATING TEMPERATURE FALLS TO −40 DEGREES CELSIUS FOR EXTENDED PERIODS OF TIME USE TRIBOLUBE L−3 SYNTHETIC GEAR OIL BY AEROSPACE LUBRICANTS, INC., COLUMBUS, OHIO 43212, OR SYNTHETIC GEAR OIL BY RADIATION SYSTEMS, INC., LARGO, FLORIDA.

FIGURE AND INDEX NO.	REF DES	PART NUMBER	INDENT	DESCRIPTION	CAGE CODE	QTY PER ASSY	CODES SMR	CODES USABLE ON
5−7	2A1A1A6	1222A11	2	BEARING, 4PT ANGULAR CONTACT, ELEVATION (1M813) (spec dwg 14636−5001−103)	0HRJ8	1	PAFLD	
				(ATTACHING PARTS)				
		B1821BH050C350N	2	SCREW	80204	48	PAOZZ	
		MS9320−14	2	WASHER	96906	48	PAOZZ	
				− − − − − − − − −				
5−8	2A1A1A7	30505−1205−101	2	ANTI−BACKLASH ADJUSTMENT ASSEMBLY	1M813	1	PADDD	
				(ATTACHING PARTS)				
		24636−2024−1	2	BOLT, PIVOT	1M813	1	PAOZZ	
				− − − − − − − − −				
5−9	2A1A1B1	14636−5018−1	2	MOTOR, DC SERVO	1M813	1	PAODD	
5−10	2A1A1B1MP2 *	A49899	3	CAP, BRUSH, MOTOR, SERVO	5W607	4	PAOZZ	
5−11	2A1A1B1MP3 *	A30868	3	BRUSH HOLDER	5W607	4	PAOZZ	
5−12	2A1A1B1MP1 *	A77151	3	BRUSH	5W607	4	PAOZZ	
5−13	2A1A1B1MP4 *	A73803	3	BRUSH, TACH	5W607	4	PAOZZ	
5−14	2A1A1B1MP5 *	A73805	3	BRUSH, CAP, TACH	5W607	4	PAOZZ	
5−15	2A1A1S3−1 2A1A1S4−1	MS27240−3	2	SWITCH	96906	2	PAOZZ	A
5−16	*	MS25036−102	3	TERMINAL LUG (98410) (ALT PN A532−06)	96906	4	PAOZZ	
5−17	2A1A1S3 2A1A1S4	MS27240−1	2	SWITCH, STOW MECHANISM	96906	2	PAOZZ	B
5−18	*	MS25036−102	3	TERMINAL LUG (98410) (ALT PN A532−06)	96906	4	PAOZZ	
5−19	2A1A1S5 THRU 2A1A1S8	121XK21−2	2	LIMIT SENSOR, MAGNETIC	91929	4	PAOZZ	
				(ATTACHING PARTS)				
		MS35333−79	2	WASHER	96906	4	PAOZZ	A
				− − − − − − − − −				
5−20		30505−2036−1	2	SHIM	26795	2	PAOZZ	B

NOTE * : NOT SHOWN

NOTE ** : FOR SITES WHERE THE OPERATING TEMPERATURE FALLS TO −40 DEGREES CELSIUS FOR EXTENDED PERIODS OF TIME USE TRIBOLUBE L−3 SYNTHETIC GEAR OIL BY AEROSPACE LUBRICANTS, INC., COLUMBUS, OHIO 43212, OR SYNTHETIC GEAR OIL BY RADIATION SYSTEMS, INC., LARGO, FLORIDA.

FIGURE AND INDEX NO.	REF DES	PART NUMBER	INDENT	DESCRIPTION	CAGE CODE	QTY PER ASSY	CODES SMR	CODES USABLE ON
5−21	2A1A1Z1	54636−2007−101	2	ELEVATION HOUSING	26795	1	XB	A
	2A1A1Z1	40505−2005−101	2	ELEVATION HOUSING	26795	1	XB	B
5−22	2A1A1S5S1	MS20066−145	2	KEY	96906	1	PAOZZ	A
		MS20066−143	2	KEY	96906	2	PAOZZ	B
5−23	2A1A1MS100	M39003/01−8232	2	CAPACITOR	81349	1	PAOZZ	B
5−24	2A1A1TB1	37TB16	2	TERMINAL BLOCK	81349	1	PAOZZ	
5−25	2A1A1TB2	37TB4	2	TERMINAL BLOCK	81349	1	PAOZZ	A
	2A1A1TB2	37TB6	2	TERMINAL BLOCK	81349	1	PAOZZ	B
5−26	2A1A1TB3	37TB6	2	TERMINAL BLOCK	81349	1	PAOZZ	A
				(ATTACHING PARTS)				
		MS51957−30	2	SCREW	96906	12	PAOZZ	
		MS35338−136	2	WASHER	96906	12	PAOZZ	
		NAS620C6	2	WASHER	80205	12	PAOZZ	
				− − − − − − − − −				
5−27		600RJ20	2	JUMPER	83330	2	PAOZZ	
5−28	2A1A1MP9	MS28775−261	2	PACKING, PREFORMED (91265) (ALT PN 1446−261)	96906	1	PCOZZ	
5−29	2A1A1M1	MS28775−163	2	PACKING, PREFORMED	96906	2	PCOZZ	A
5−30		MS28775−010	2	PACKING, PREFORMED	96906	20	PCOZZ	
5−31	2A1A1M4	MS28778−8	2	PACKING, PREFORMED	96906	1	PCOZZ	
5−32	2A1A1MS2	5−069N674−70	2	O−RING	02697	1	PCFZZ	
5−33	2A1A1W1 *	34636−1104−101	2	CABLE ASSEMBLY	1M813	1	PAOOO	A
5−34	2A1A1W1P1 *	MS3456W28−21PW	3	CONNECTOR	96906	1	PAOZZ	A
5−35	2A1A1W1J2 *	MS3102R28−21SW	3	CONNECTOR	96906	1	PAOZZ	A
5−36	2A1A1W2 *	34636−1112−101	2	CABLE ASSEMBLY	1M813	1	PAOOO	A
	2A1A1W2 *	30505−1105−101	2	CABLE ASSEMBLY	1M813	1	PAOOO	B
	2A1A1W3 *	50505−1103−101	2	HARNESS ASSEMBLY, ELEVATION	1M813	1	PAOOO	
5−37	2A1A1W2P2 *	MS3456W22−22P	3	CONNECTOR	96906	1	PAOZZ	A
5−38	2A1A1W2P5 *	MS3456W20−16S	3	CONNECTOR	96906	1	PAOZZ	A
5−39		54636−1114−101	2	HARNESS ASSEMBLY, ELEVATION	1M813	1	XB	A

NOTE * : NOT SHOWN

NOTE ** : FOR SITES WHERE THE OPERATING TEMPERATURE FALLS TO −40 DEGREES CELSIUS FOR EXTENDED PERIODS OF TIME USE TRIBOLUBE L−3 SYNTHETIC GEAR OIL BY AEROSPACE LUBRICANTS, INC., COLUMBUS, OHIO 43212, OR SYNTHETIC GEAR OIL BY RADIATION SYSTEMS, INC., LARGO, FLORIDA.

FIGURE AND INDEX NO.	REF DES	PART NUMBER	INDENT	DESCRIPTION	CAGE CODE	QTY PER ASSY	CODES SMR	CODES USABLE ON
5−40		50505−1103−101	2	HARNESS ASSEMBLY	1M813	1	PAOOO	B
5−41	2A1A1P1	MS3106R28−21P	3	CONNECTOR	96906	1	PAOZZ	
5−42	2A1A1P4	MS3456W14S−5S	3	CONNECTOR	96906	1	PAOZZ	
5−43	2A1A1J1	DAU−15S	3	CONNECTOR	71468	1	PAOZZ	
5−44	2A1A1J2	M24308/2−1	3	CONNECTOR	81349	1	PAOZZ	B
5−45		MS25036−102	3	TERMINAL LUG (98410) (ALT PN A532−06)	96906	16	PAOZZ	A
5−46		MS25036−102	3	TERMINAL LUG (98410) (ALT PN A532−06)	96906	35	PAOZZ	B
5−47	*	MS25036−106	3	TERMINAL LUG	96906	2	PAOZZ	B
5−48	* **	SCH 75W	2	OIL, LUBRICATING, SYNTHETIC, IN 5 GALLON CAN	12939	AR	PAOZZ	

USABLE ON CODES

A − LIMITED PRODUCTION

B − FULL SCALE PRODUCTION

NOTE * : NOT SHOWN

NOTE ** : FOR SITES WHERE THE OPERATING TEMPERATURE FALLS TO −40 DEGREES CELSIUS FOR EXTENDED PERIODS OF TIME USE TRIBOLUBE L−3 SYNTHETIC GEAR OIL BY AEROSPACE LUBRICANTS, INC., COLUMBUS, OHIO 43212, OR SYNTHETIC GEAR OIL BY RADIATION SYSTEMS, INC., LARGO, FLORIDA.

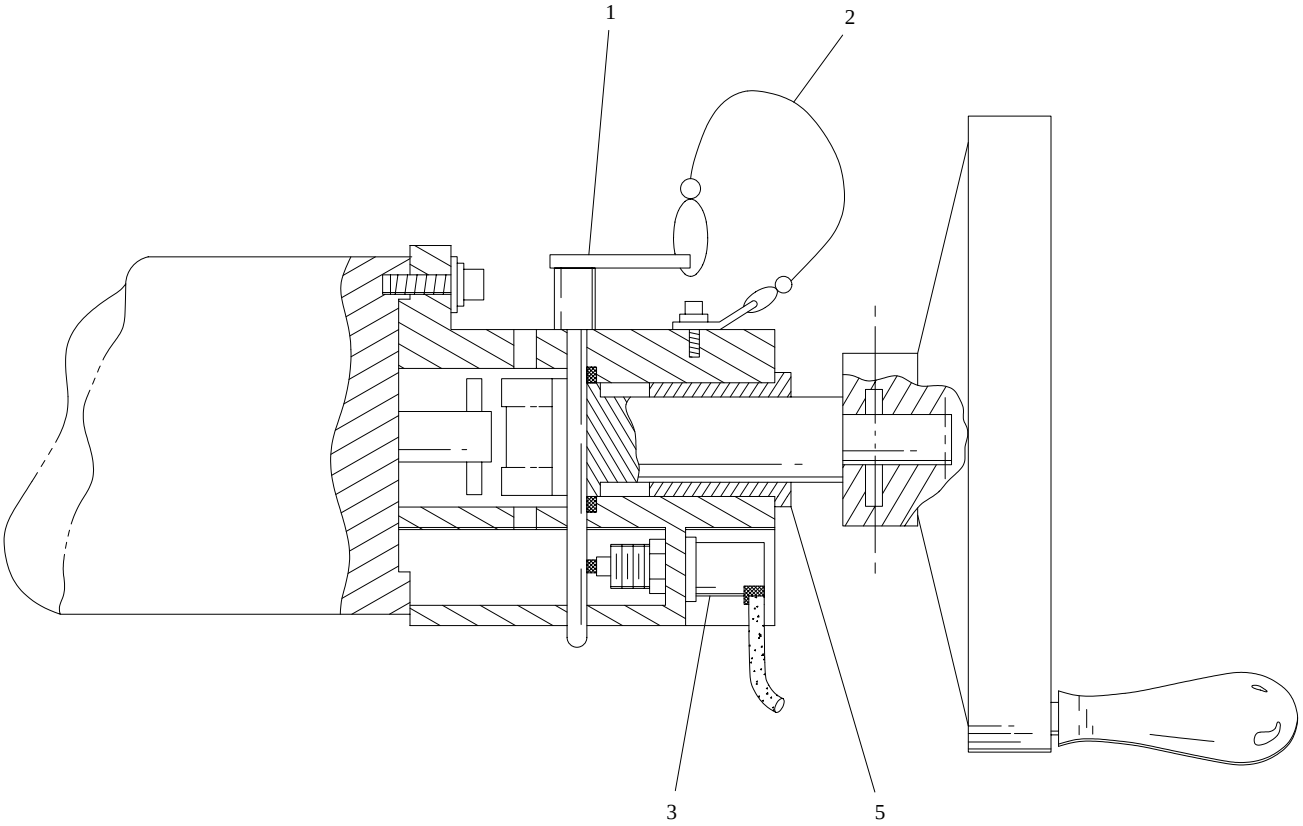

HOUSING SHOWN CUT−AWAY
FOR CLARITY

NX1128

FIGURE 6. Manual Drive Assembly, UD2A1A1A1 and UD2A1A3A1

Section II. Maintenance Parts List

FIGURE AND INDEX NO.	REF DES	PART NUMBER	INDENT	DESCRIPTION	CAGE CODE	QTY PER ASSY	CODES SMR	CODES USABLE ON
6−	2A1A3A1 2A1A1A1	54636−1204−102	1	MANUAL DRIVE ASSEMBLY (For NHA see FIGURE 5 on Page 2 − 90 and FIGURE 10 on Page 2 − 110)	1M813	REF	PAODD	
	2A1A1A1	54636−1204−101	1	MANUAL DRIVE ASSEMBLY (For NHA see FIGURE 5 on Page 2 − 90)	1M813	REF	PAODD	
6−1		MS17986C438	2	PIN, QUICK RELEASE	96906	1	PAOZZ	
6−2		LT1504−C6−6	2	LANYARD, 6 IN. LONG	84256	1	PAOZZ	
				(ATTACHING PARTS)				
		MS16995−25	2	SCREW	96906	1	PAOZZ	
		MS35338−137	2	WASHER	96906	1	PAOZZ	
		MS15795−807	2	WASHER	96906	1	PAOZZ	
				− − − − − − − − −				
6−3	2A1A1A1S1 2A1A3A1S1	20505−1104−101	2	SWITCH ASSEMBLY, INTERLOCK	26795	1	PAOZZ	
	2A1A1A1S1−1 2A1A3A1S1−1	MS27240−3	3	SWITCH	96906	1	PAOZZ	
6−4	*	MS25036−102	3	TERMINAL LUG (98410) (ALT PN A532−06)	96906	4	PAOZZ	
6−5	2A1A1A1MS4 2A1A3A1MS4	FB1622−14	2	BEARING	71041	1	PAOZZ	
	NOTE * : NOT SHOWN							

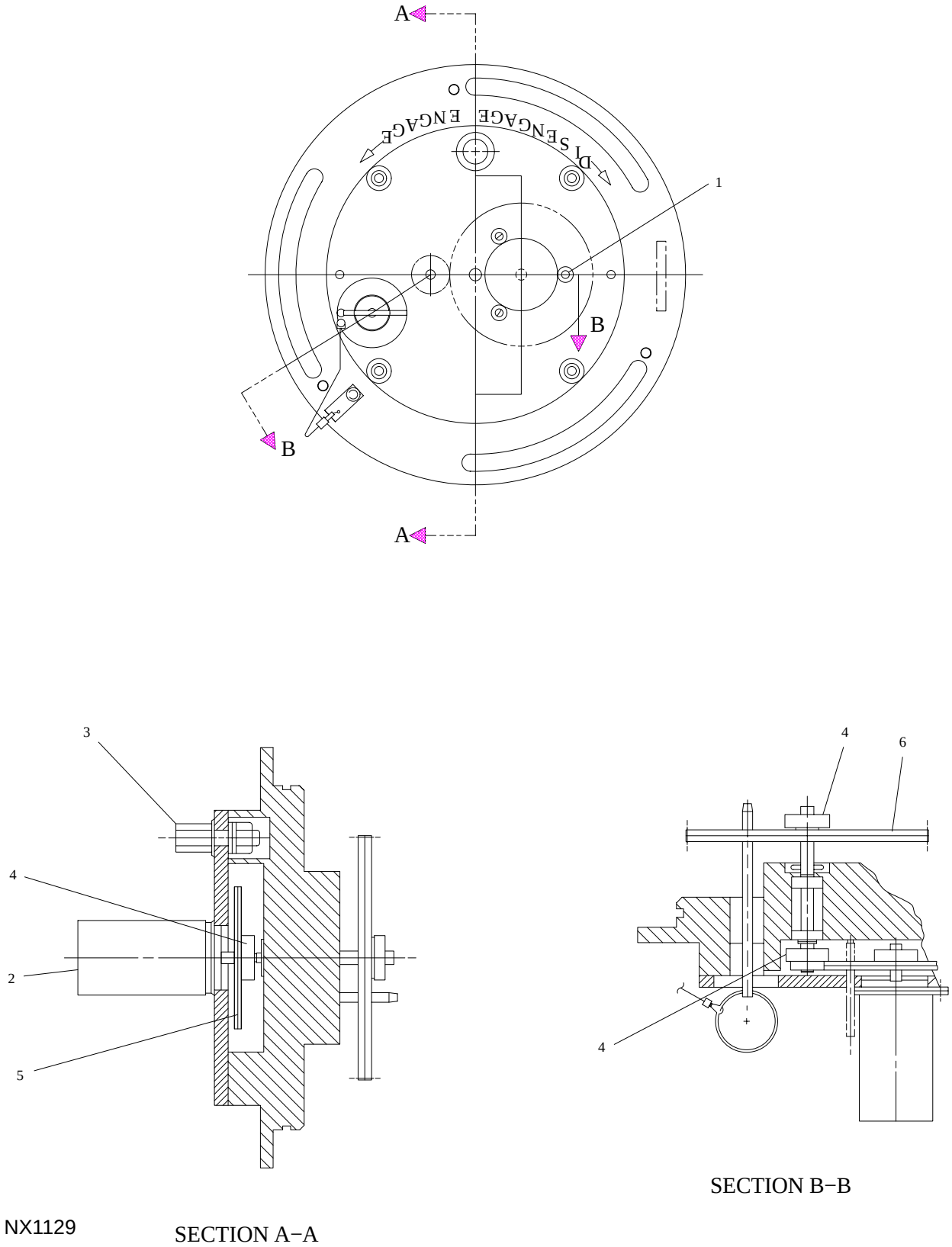

FIGURE 7. Data Package Assembly, UD2A1A1A2 and UD2A1A3A2

FIGURE AND INDEX NO.	REF DES	PART NUMBER	INDENT	DESCRIPTION	CAGE CODE	QTY PER ASSY	CODES	
							SMR	USABLE ON
7−	2A1A1A2 2A1A3A2	54636−1211−102	1	DATA PACKAGE ASSEMBLY (For NHA see FIGURE 5 on Page 2 − 90 and FIGURE 10 on Page 2 − 110)	1M813	REF	PAODD	
7−1	2A1A1A2MP4 2A1A3A2MP4	CM6−1314.096S	2	CLAMP, SYNCHRO	34996	3	PAOZZ	
				(ATTACHING PARTS)				
		MS16995−10	2	SCREW	96906	3	PAOZZ	
		MS35338−135	2	WASHER, LOCK	96906	3	PAOZZ	
		NAS620C4L	2	WASHER	80205	3	PAOZZ	
				− − − − − − − − −				
7−2	2A1A1A2A1 2A1A3A2A1	14636−5017−1	2	OPTICAL ENCODER, 14 BIT ABSOLUTE (26795) (spec dwg 14636−5017−1)	1M813	1	PAOLD	
7−3		34636−2139	2	HANDLE, HEX	26795	1	PAOZZ	
				(ATTACHING PARTS)				
		MS35307−460	2	BOLT	96906	1	PAOZZ	
		MS35338−141	2	WASHER	96906	2	PAOZZ	
		MS15795−814	2	WASHER	96906	1	PAOZZ	
		MS35691−19	2	NUT	96906	1	PAOZZ	
				− − − − − − − − −				
7−4		CG1−12	2	CLAMP, GEAR, 1/4 IN. SHAFT	29440	3	PAOZZ	
7−5	2A1A1A2MP2 2A1A3A2MP2	34636−2143−2	2	GEAR	26795	1	PAOZZ	
7−6	2A1A1A2MP1 2A1A3A2MP1	34636−5015−1	2	GEAR	26795	1	PAOZZ	

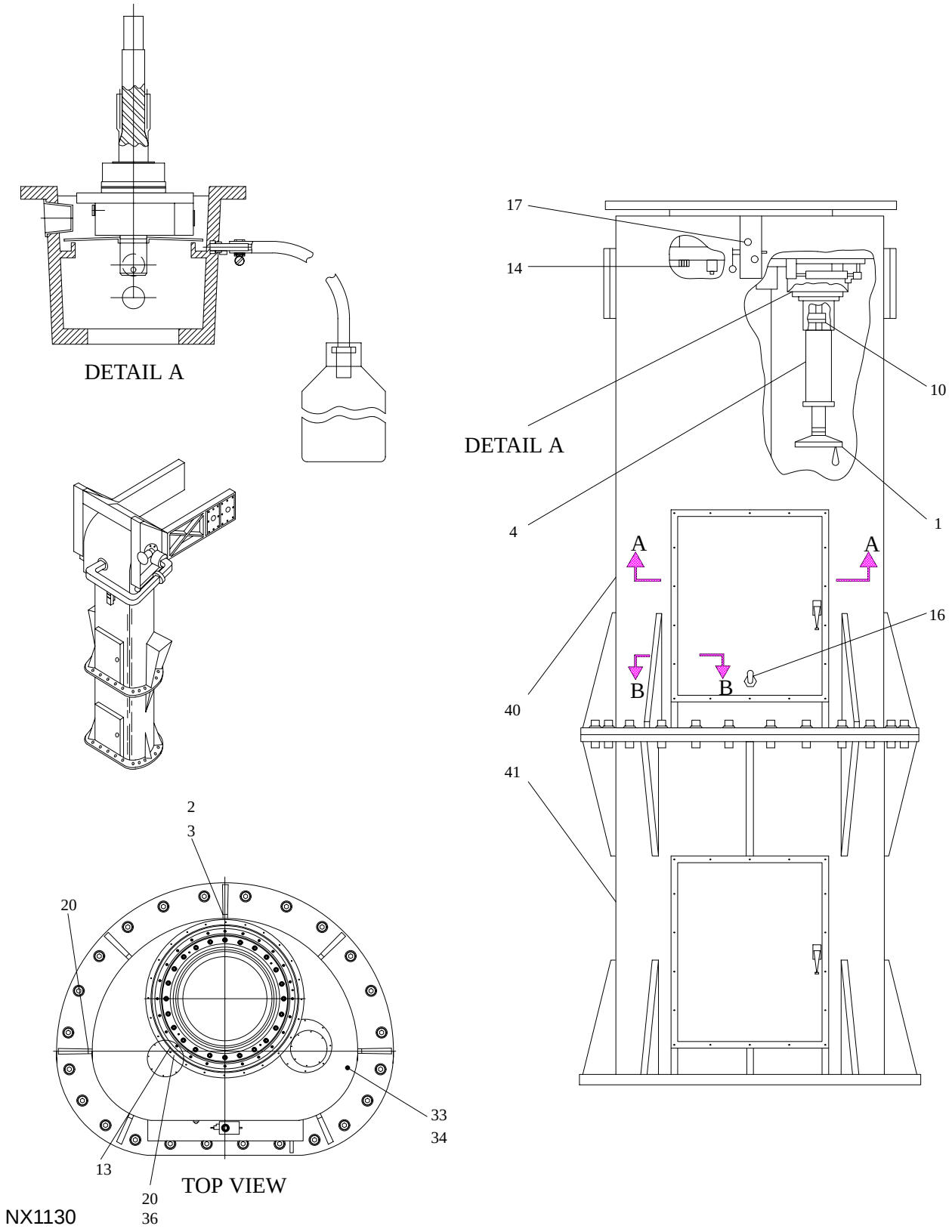

FIGURE 8. Azimuth Assembly, UD2A1A3 (Limited Production) (Sheet 1 of 2)

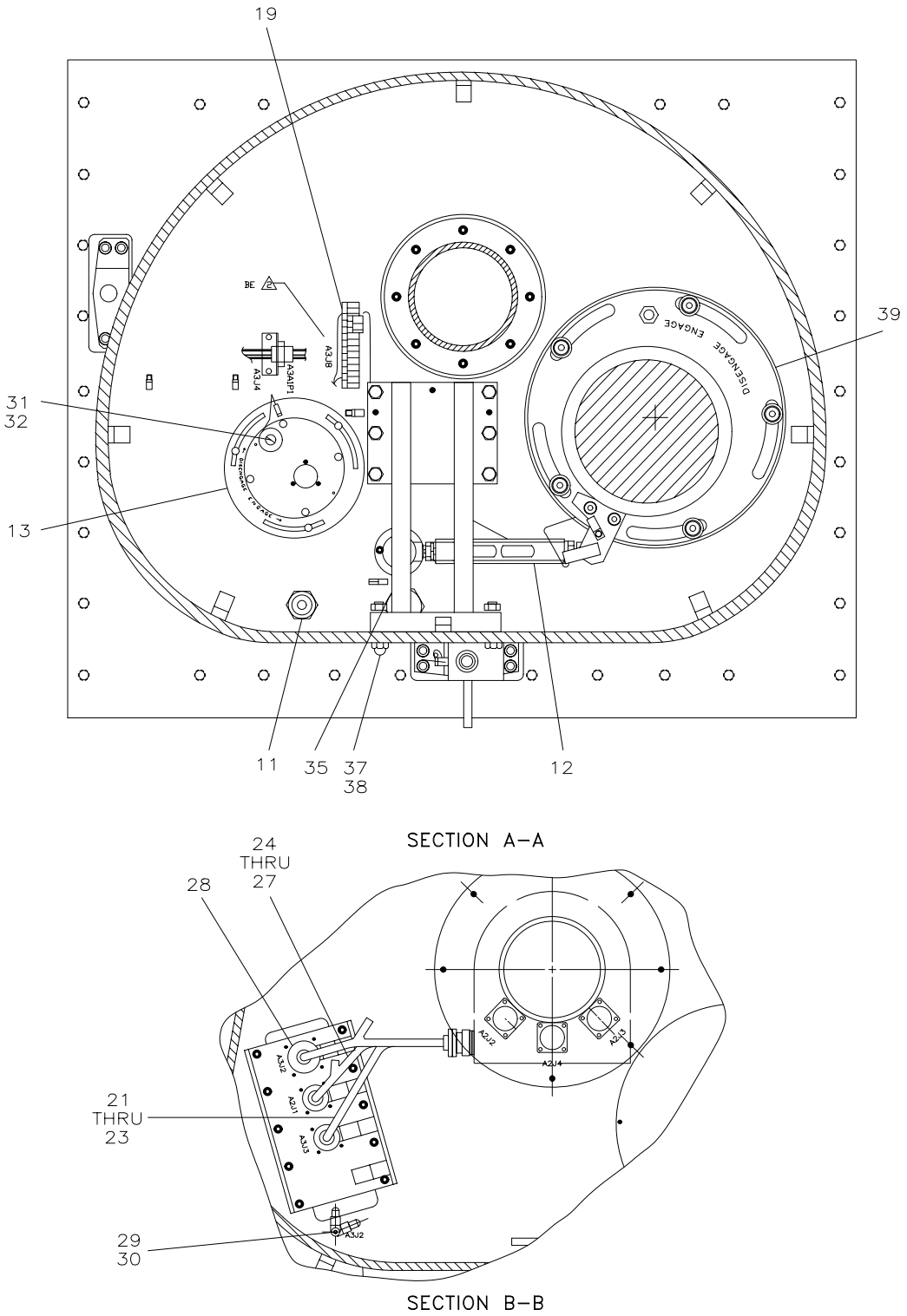

NX1131

FIGURE 8. Azimuth Assembly, UD2A1A3 (Limited Production) (Sheet 2 of 2)

FIGURE AND INDEX NO.	REF DES	PART NUMBER	INDENT	DESCRIPTION	CAGE CODE	QTY PER ASSY	CODES SMR	CODES USABLE ON
8−	2A1A3	54636−1201−101	1	AZIMUTH ASSEMBLY (For NHA see FIGURE 4 on Page 2 − 71)	1M813	REF	PBFDD	
8−1	2A1A3A1	54636−1204−101	2	MANUAL DRIVE ASSEMBLY (For breakdown see FIGURE 6 on Page 2 − 98)	1M813	1	PAODD	
				(ATTACHING PARTS)				
		MS24677−19	2	SCREW	96906	6	PAOZZ	
		MS35338−137	2	WASHER	96906	6	PAOZZ	
		MS15795−807	2	WASHER	96906	6	PAOZZ	
				− − − − − − − − −				
8−2		24636−2028−101	2	HANDLE, STOW PIN	1M813	1	PAOZZ	
8−3		34636−2026−2	2	STOW PIN	26795	1	PAOZZ	
8−4	2A1A3B1	14636−5018−1	2	MOTOR, DC SERVO	26795	1	PAODD	
				(ATTACHING PARTS)				
		MS16995−81	2	SCREW	96906	4	PAOZZ	
		MS35338−141	2	WASHER	96906	4	PAOZZ	
		NAS1149C0663R	2	WASHER	80205	4	PAOZZ	
				− − − − − − − − −				
8−5	2A1A1B1MP2 *	A49899	3	CAP, BRUSH, MOTOR, SERVO (Replaces PN A30057)	5W607	4	PAOZZ	
8−6	2A1A1B1MP3 *	A30868	3	BRUSH HOLDER	5W607	4	PAOZZ	
8−7	2A1A1B1MP1 *	A77151	3	BRUSH	5W607	4	PAOZZ	
8−8	2A1A1B1MP4 *	A73803	3	BRUSH, TACH	5W607	4	PAOZZ	
8−9	2A1A1B1MP5 *	A73805	3	BRUSH, CAP, TACH	5W607	4	PAOZZ	
8−10	2A1A3A4	24636−2088−1	2	FLEXIBLE COUPLING (Supplied with 4 No.10 set screws)	1M813	1	PAOZZ	
8−11	2A1A3RT2	4G2190	2	SENSOR, OIL LEVEL, MAIN BEARING	97484	1	PAOZZ	
8−12	2A1A3A6	30505−1205−101	2	ANTI−BACKLASH ADJUSTMENT ASSEMBLY	1M813	1	PADDD	
				(ATTACHING PARTS)				
		24636−2024−1	2	BOLT, PIVOT	26795	1	PAOZZ	
		MS15795−826	2	WASHER	96906	1	PAOZZ	
				− − − − − − − − −				
	NOTE * :	NOT SHOWN						

FIGURE AND INDEX NO.	REF DES	PART NUMBER	INDENT	DESCRIPTION	CAGE CODE	QTY PER ASSY	CODES SMR	CODES USABLE ON
8−13	2A1A3A2	54636−1211−102	2	DATA PACKAGE ASSEMBLY (For breakdown see FIGURE 7 on Page 2 − 100)	1M813	1	PAODD	
				(ATTACHING PARTS)				
		MS16995−51	2	SCREW	96906	3	PAOZZ	
		MS35338−139	2	WASHER	96906	3	PAOZZ	
		MS15795−810	2	WASHER	96906	3	PAOZZ	
				− − − − − − − − −				
8−14	2A1A3RT1	4G2473	2	SENSOR, LEVEL, ELECTRO/OPTICAL	97484	1	PAOZZ	
8−15	2A1A3A5 *	1222A10	2	BEARING, 4 PT ANGULAR CONTACT, AZIMUTH (1M813) (spec dwg 14636−5001−102)	0HRJ8	1	PAFLD	
				(ATTACHING PARTS)				
		MS35307−539	2	SCREW	96906	24	PAOZZ	
		MS35338−148	2	WASHER	96906	24	PAOZZ	
		MS15795−826	2	WASHER	96906	48	PAOZZ	
		MS51971−10	2	NUT	96906	24	PAOZZ	
				− − − − − − − − −				
8−16	2A1A3S1	MS24658−22D	2	SWITCH	96906	1	PAOZZ	
8−17	2A1A3S2	MS27240−3	2	SWITCH	96906	1	PAOZZ	
8−18	2A1A3W3 *	54636−1115−101	2	HARNESS ASSEMBLY, AZIMUTH	26795	1	PAOOO	
8−19	2A1A3TB1	37TB12	2	TERMINAL BLOCK	81349	1	PAOZZ	
				(ATTACHING PARTS)				
		MS51957−30	2	SCREW	96906	4	PAOZZ	
		MS35338−136	2	WASHER	96906	4	PAOZZ	
		NAS620C6	2	WASHER	80205	4	PAOZZ	
				− − − − − − − − −				
8−20		44636−2153−1	2	CLAMP, SEAL	1M813	4	PAOZZ	
8−21	2A1A3W1	34636−1111−101	2	CABLE ASSEMBLY	1M813	1	PAOOO	
8−22	2A1A3W1J3	MS3102R28−21P	3	CONNECTOR	96906	1	PAOZZ	
8−23	2A1A3W1P7	MS3456W28−21SW	3	CONNECTOR	96906	1	PAOZZ	
8−24	2A1A3W2	34636−1113−101	2	CABLE ASSEMBLY	1M813	1	PAOOO	
8−25	2A1A3W2P3	MS33456W20−16S	3	CONNECTOR	96906	1	PAOZZ	
8−26	2A1A3W2P4	MS3106F22−22S	3	CONNECTOR	96906	1	PAOZZ	
8−27	2A1A3W2J1	MS3452W28−9P	3	CONNECTOR	96906	1	PAOZZ	
	NOTE * :	NOT SHOWN						

FIGURE AND INDEX NO.	REF DES	PART NUMBER	INDENT	DESCRIPTION	CAGE CODE	QTY PER ASSY	CODES SMR	CODES USABLE ON
8−28	2W20	1221796−301	2	CABLE ASSEMBLY	56232	1	PAOOO	
8−29		34636−2118−102	2	CABLE, GROUNDING	1M813	1	XB	
8−30		34636−2118−103	2	CABLE, GROUNDING	1M813	1	XB	
				(ATTACHING PARTS)				
		MS35307−360	2	SCREW	96906	1	PAOZZ	
		MS35338−141	2	WASHER	96906	1	PAOZZ	
		NAS1149C0663R	2	WASHER	80205	1	PAOZZ	
				− − − − − − − − −				
8−31		B434	2	VALVE, LOCK−AND−DRAIN	97484	1	PAOZZ	
8−32	2A1A3MP9	MS28775−261	2	PACKING, PREFORMED (91265) (ALT PN 1446−261)	96906	1	PCOZZ	
8−33		A8708	2	VALVE, RELIEF	97484	1	PAOZZ	
8−34		MS28778−6	2	PACKING	96906	1	PCOZZ	
8−35	2A1A3P1	M−109	2	PLUG, DRAIN, MAGNETIC	97484	1	PAOZZ	
8−36		339226	2	SEAL, LIP	76385	1	PAOZZ	
8−37		S53BZ	2	PLUG, SIGHT	97484	1	PAOZZ	
8−38		MS28778−8	2	PACKING	96906	5	PCOZZ	
8−39	2A1A3MS6	5−069N674−70	2	O−RING, GEARBOX	02697	1	PCFZZ	
8−40	2A1A3Z1	54636−2001−101	2	HOUSING, AZIMUTH	1M813	1	XB	
8−41	2A1A3Z2	54636−2025−1	2	RISER, AZIMUTH HOUSING	1M813	1	XB	
	NOTE * :	NOT SHOWN						

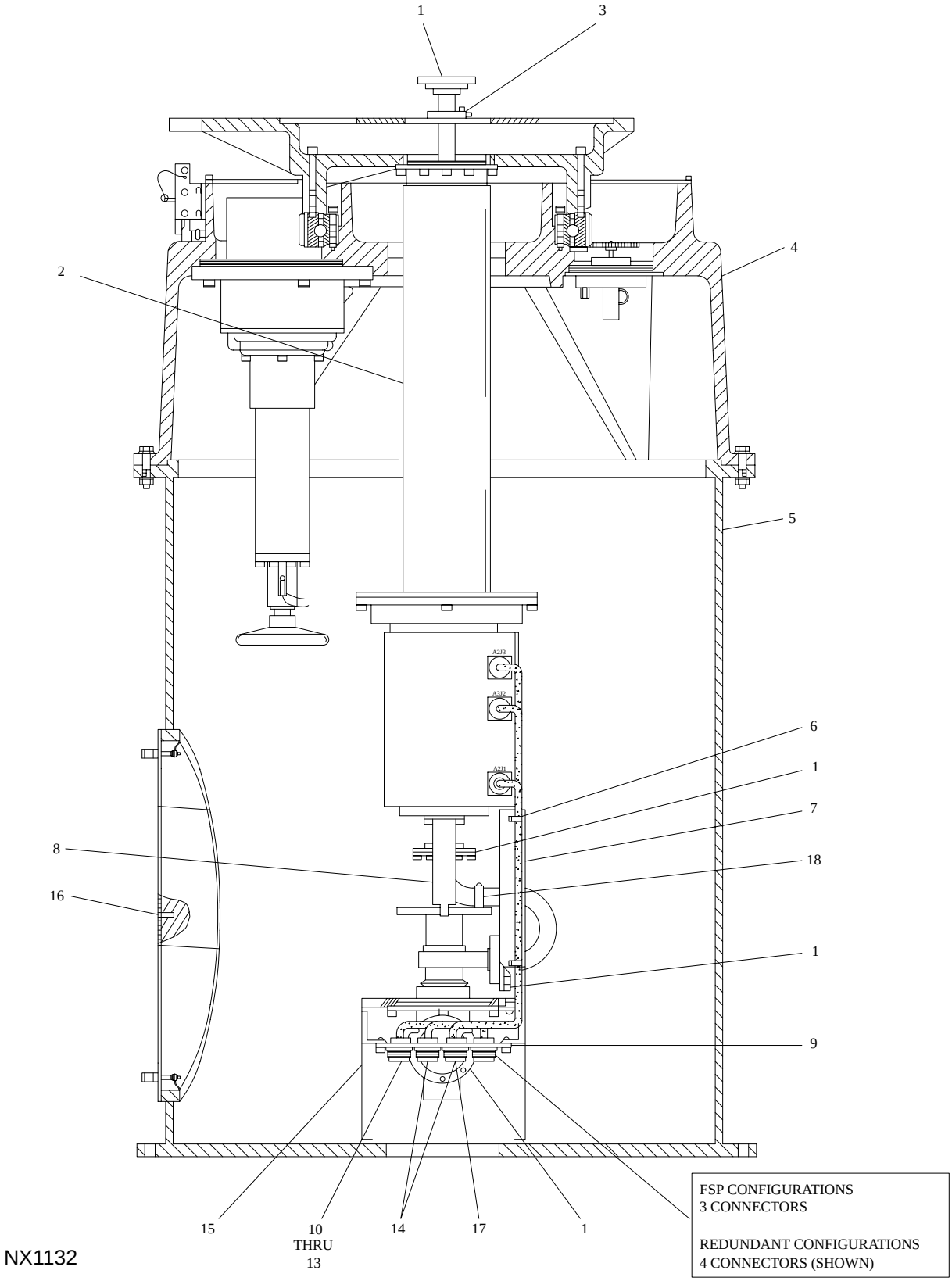

FIGURE 9. Azimuth Assembly, UD2A1A3 (Full Scale Production and Redundant Configurations)

FIGURE AND INDEX NO.	REF DES	PART NUMBER	INDENT	DESCRIPTION	CAGE CODE	QTY PER ASSY	CODES SMR	CODES USABLE ON
9−	2A1A3	40505−1201−101	1	AZIMUTH ASSEMBLY (For NHA see FIGURE 4 on Page 2 − 71)	1M813	REF	PBFDD	
9−1		MS90064−17	2	PACKING, PREFORMED	96906	4	PCOZZ	
9−2		40505−2002−101	2	DRIVER, SLIP RING	26795	1	PAOZZ	
				(ATTACHING PARTS)				
		MS16997−100	2	SCREW	96906	16	PAOZZ	
		MS9320−12	2	WASHER	96906	16	PAOZZ	
		MS16997−81	2	SCREW	96906	2	PAOZZ	
		MS9320−11	2	WASHER	96906	2	PAOZZ	
				− − − − − − − − −				
9−3		34636−2104−1	2	BRACKET, STRAIGHT WAVEGUIDE	26795	1	PAOZZ	
				(ATTACHING PARTS)				
		MS16997−100	2	SCREW	96906	2	PAOZZ	
		MS9320−12	2	WASHER	96906	2	PAOZZ	
				− − − − − − − − −				
9−4		40505−1210−101	2	AZIMUTH DRIVE MODULE ASSEMBLY (For breakdown see FIGURE 10 on Page 2 − 110)	26795	1	XB	
9−5	2A1A3Z1	40505−2001−1	2	BASE, AZIMUTH, WELDMENT	26795	1	XB	
9−6		MS21919WDG12	2	CLAMP	96906	5	PAOZZ	
				(ATTACHING PARTS)				
		MS51958−63	2	SCREW	96906	5	PAOZZ	
		MS15795−808	2	WASHER	96906	5	PAOZZ	
		MS35338−138	2	WASHER	96906	5	PAOZZ	
				− − − − − − − − −				
9−7		40505−2012−1	2	RETAINER, SLIP RING STATOR	1M813	1	PAOZZ	
				(ATTACHING PARTS)				
		MS16997−62	2	SCREW	96906	2	PAOZZ	
		MS9320−10	2	WASHER	96906	2	PAOZZ	
				− − − − − − − − −				
9−8	2A1A3MP2	34636−2086−101	2	DRIVE BRACKET, AZ ROTARY JOINT	1M813	1	PAOZZ	
				(ATTACHING PARTS)				
		MS16997−60	2	SCREW	96906	2	PAOZZ	

FIGURE AND INDEX NO.	REF DES	PART NUMBER	INDENT	DESCRIPTION	CAGE CODE	QTY PER ASSY	CODES SMR	CODES USABLE ON
		MS9320−10	2	WASHER	96906	2	PAOZZ	
				− − − − − − − − −				
9−9		40505−2027−101	2	PLATE, CONNECTOR	26795	1	PAOZZ	
				(ATTACHING PARTS)				
		MS16997−62	2	SCREW	96906	4	PAOZZ	
		MS9320−10	2	WASHER	96906	4	PAOZZ	
				− − − − − − − − −				
9−10	2A1A3W2	34636−1113−101	2	CABLE ASSEMBLY	1M813	1	PAOOO	
9−11	2A1A3W2P3	MS3456W20−16S	3	CONNECTOR	96906	1	PAOZZ	
9−12	2A1A3W2P4	MS3106F22−22S	3	CONNECTOR	96906	1	PAOZZ	
9−13	2A1A3W2J1	MS3452W28−9P	3	CONNECTOR	96906	1	PAOZZ	
9−14	2W26	1221796−302	2	CABLE ASSEMBLY	56232	1	PAOOO	B
9−15		30505−2032−1	2	PANEL, AZIMUTH KICK	26795	1	PAOZZ	
				(ATTACHING PARTS)				
		MS16997−62	2	SCREW	96906	10	PAOZZ	
		MS9320−10	2	WASHER	96906	10	PAOZZ	
				− − − − − − − − −				
9−16		MS16555−648	2	PIN	96906	2	PAOZZ	
9−17	2W20	1221796−301	2	CABLE ASSEMBLY	56232	1	PAOOO	A
9−18		30505−2053−1	2	SHIM	1M813	1	PAOZZ	

USABLE ON CODES

A − FULL SCALE PRODUCTION

B − REDUNDANT CONFIGURATION

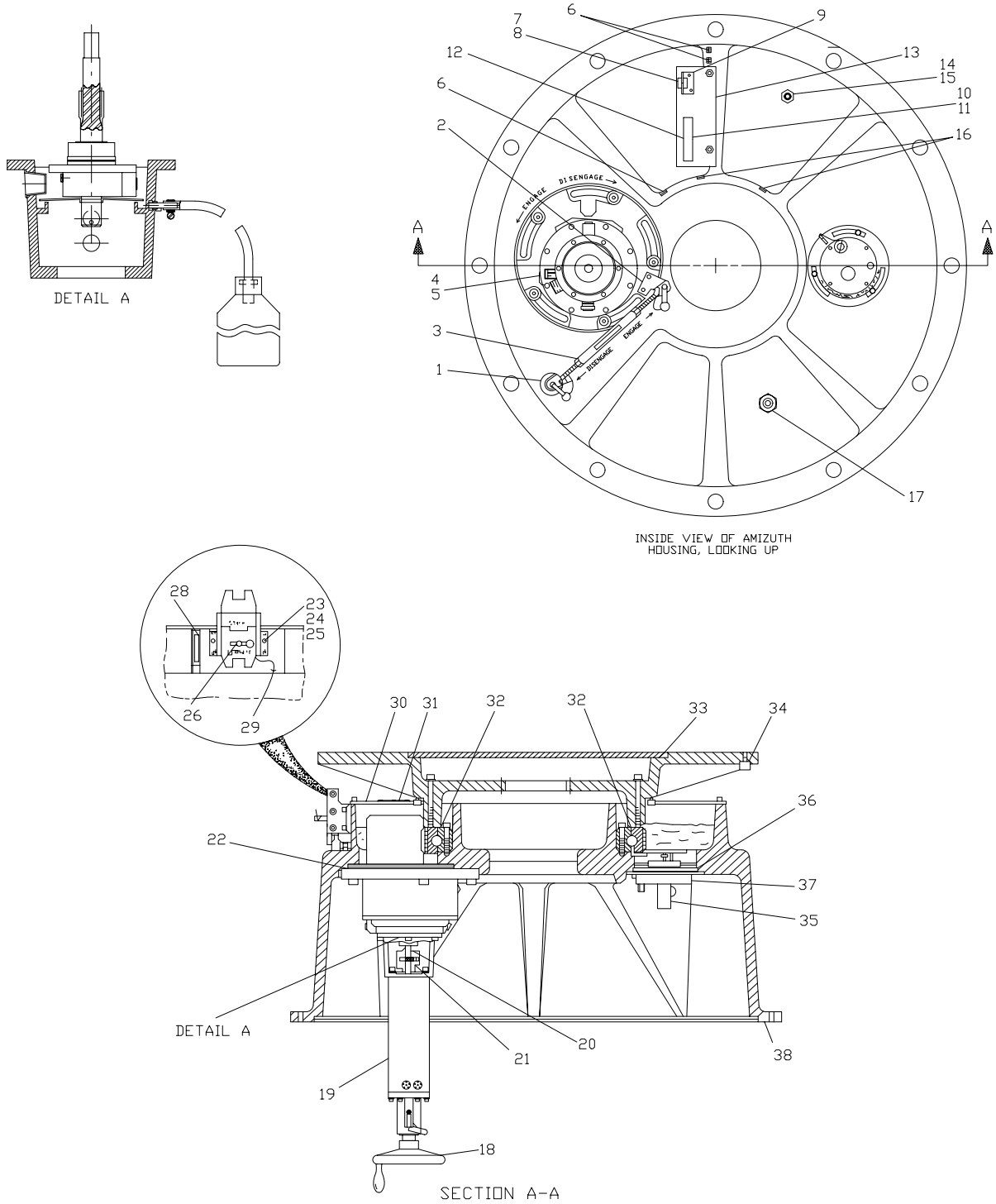

NX1133

FIGURE 10. Azimuth Drive Module Assembly, (Part of UD2A1A3)

FIGURE AND INDEX NO.	REF DES	PART NUMBER	INDENT	DESCRIPTION	CAGE CODE	QTY PER ASSY	CODES SMR	CODES USABLE ON
10−		40505−1210−101	1	AZIMUTH DRIVE MODULE ASSEMBLY (For NHA see FIGURE 9 on Page 2 − 107)	26795	REF	XB	
10−1		30505−2030−1	2	SUPPORT, BACKLASH	26795	1	XB	
				(ATTACHING PARTS)				
		MS16997−61	2	SCREW	96906	3	PAOZZ	
		MS9320−10	2	WASHER	96906	3	PAOZZ	
				− − − − − − − − −				
10−2		30505−2035−1	2	BRACKET, BACKLASH	26795	1	XB	
				(ATTACHING PARTS)				
		MS16997−145	2	SCREW	96906	2	PAOZZ	
		MS9320−14	2	WASHER	96906	2	PAOZZ	
				− − − − − − − − −				
10−3		30505−1205−101	2	ANTI−BACKLASH ADJUSTMENT ASSEMBLY	1M813	1	PADDD	
10−4	2A1A3RT1	4G2473	2	SENSOR, LEVEL, ELECTRO/OPTICAL	97484	1	PAOZZ	
10−5		MS28778−8	2	PACKING	96906	1	PCOZZ	
10−6		MS21919WDG15	2	CLAMP	96906	3	PAOZZ	
				(ATTACHING PARTS)				
		MS51958−63	2	SCREW	96906	6	PAOZZ	
		MS35338−138	2	WASHER	96906	6	PAOZZ	
		MS15795−808	2	WASHER	96906	6	PAOZZ	
				− − − − − − − − −				
10−7		M24308/25−9	2	CONNECTOR, JACKSCREW	81349	1	PAOZZ	
				(ATTACHING PARTS)				
		M24308/26−1	2	SCREW LOCK, FEMALE	81349	2	PAOZZ	
				− − − − − − − − −				
10−8		MS3116P8−33S	2	CONNECTOR	96906	1	PAOZZ	
10−9		34636−2112−1	2	BRACKET, ENCODER CONNECTOR	26795	1	XB	
10−10		MS25036−102	2	TERMINAL LUG (98410) (ALT PN A532−06)	96906	9	PAOZZ	

NOTE * : NOT SHOWN

NOTE ** : FOR SITES WHERE THE OPERATING TEMPERATURE FALLS TO −40 DEGREES CELSIUS FOR EXTENDED PERIODS OF TIME USE TRIBOLUBE L−3 SYNTHETIC GEAR OIL BY AEROSPACE LUBRICANTS, INC., COLUMBUS, OHIO 43212, OR SYNTHETIC GEAR OIL BY RADIATION SYSTEMS, INC., LARGO, FLORIDA.

FIGURE AND INDEX NO.	REF DES	PART NUMBER	INDENT	DESCRIPTION	CAGE CODE	QTY PER ASSY	CODES SMR	CODES USABLE ON
10−11		M39003/01−8232	2	CAPACITOR	81349	1	PAOZZ	
10−12	2A1A3TB1	37TB12	2	TERMINAL BLOCK	81349	1	PAOZZ	
				(ATTACHING PARTS)				
		MS51957−30	2	SCREW	96906	4	PAOZZ	
		NAS620−6L	2	WASHER	80205	4	PAOZZ	
				− − − − − − − − −				
10−13		40505−2051−101	2	BRACKET, AZIMUTH CONNECTOR	26795	1	XB	
10−14	2A1A3RT2	4G2190	2	SENSOR, OIL LEVEL, MAIN BEARING	97484	1	PAOZZ	
10−15		MS28778−8	2	PACKING	96906	1	PCOZZ	
10−16		MS21919WDG12	2	CLAMP	96906	2	PAOZZ	
				(ATTACHING PARTS)				
		MS51958−63	2	SCREW	96906	2	PAOZZ	
		MS35338−138	2	WASHER	96906	2	PAOZZ	
		MS15795−808	2	WASHER	96906	2	PAOZZ	
				− − − − − − − − −				
10−17	2A1A3P1	M−109	2	PLUG, DRAIN, MAGNETIC	97484	1	PAOZZ	
10−18	2A1A3A1	54636−1204−102	2	MANUAL DRIVE ASSEMBLY (For breakdown see FIGURE 6 on Page 2 − 98)	1M813	1	PAODD	
				(ATTACHING PARTS)				
		MS24677−19	2	SCREW	96906	6	PAOZZ	
		MS9320−08	2	WASHER	96906	6	PAOZZ	
				− − − − − − − − −				
10−19	2A1A3B1	14636−5018−1	2	MOTOR, DC SERVO	1M813	1	PAODD	
10−20	2A1A3A4	24636−2088−1	2	FLEXIBLE COUPLING (Supplied with 4 No.10 set screws)	1M813	1	PAOZZ	
10−21		MS20066−143	2	KEY	96906	2	PAOZZ	
10−22	2A1A3MS6	5−069N674−70	2	O−RING, GEARBOX	02697	1	PCFZZ	
10−23		MS16555−47	2	PIN	96906	2	PAOZZ	
10−24		MS16555−650	2	PIN, STRAIGHT	96906	2	PAOZZ	

NOTE * : NOT SHOWN

NOTE ** : FOR SITES WHERE THE OPERATING TEMPERATURE FALLS TO −40 DEGREES CELSIUS FOR EXTENDED PERIODS OF TIME USE TRIBOLUBE L−3 SYNTHETIC GEAR OIL BY AEROSPACE LUBRICANTS, INC., COLUMBUS, OHIO 43212, OR SYNTHETIC GEAR OIL BY RADIATION SYSTEMS, INC., LARGO, FLORIDA.

FIGURE AND INDEX NO.	REF DES	PART NUMBER	INDENT	DESCRIPTION	CAGE CODE	QTY PER ASSY	CODES SMR	CODES USABLE ON
10−25		CL−3−BLP−T−1.0	2	PIN, BALL LOCK	99862	1	PAOZZ	
10−26	2A1A3S2	MS27240−1	3	SWITCH, STOW MECHANISM	96906	1	PAOZZ	A
10−27	*	MS25036−102	3	TERMINAL LUG (98410) (ALT PN A532−06)	96906	4	PAOZZ	
10−28		15404	2	GAUGE, COLUMN VIEW OIL LEVEL	2T731	1	PAOZZ	
10−29		3800	2	STRAIN RELIEF, STOW PIN CABLE	28520	1	PAOZZ	
10−30		40505−2026−1	2	COVER, AZIMUTH BEARING	26795	1	XB	
10−31		20505−2037−1	2	COVER, AZIMUTH BACKLASH	26795	1	XB	
10−32	2A1A3A5	1222A10	2	BEARING, 4 PT ANGULAR CONTACT, AZIMUTH (1M813) (spec dwg 14636−5001−102)	0HRJ8	1	PAFLD	
10−33		40505−2010−1	2	COVER, TURNTABLE	26795	1	XB	
10−34		25715	2	JIG FEET	94822	2	XB	
10−35	2A1A3A2	54636−1211−102	2	DATA PACKAGE ASSEMBLY (For breakdown see FIGURE 7 on Page 2 − 100)	1M813	1	PAODD	
				(ATTACHING PARTS)				
		MS51484−05	2	SCREW	96906	3	PAOZZ	
		MS9320−10	2	WASHER	96906	3	PAOZZ	
				− − − − − − − − −				
10−36	2A1A3MP9	MS28775−261	2	PACKING, PREFORMED (91265) (ALT PN 1446−261)	96906	1	PCOZZ	
10−37		6783	2	DRAIN COCK, AZ OIL SUMP, 1/8 NPT	79470	1	PAOZZ	
10−38		40505−2006−1	2	HOUSING, AZIMUTH DRIVE MODULE	26795	1	XB	
10−39	* **	SCH 75W	2	OIL, LUBRICATING, SYNTHETIC, IN 5 GALLON CAN	12939	AR	PAOZZ	

USABLE ON CODES

A − FULL SCALE PRODUCTION

NOTE * : NOT SHOWN

NOTE ** : FOR SITES WHERE THE OPERATING TEMPERATURE FALLS TO −40 DEGREES CELSIUS FOR EXTENDED PERIODS OF TIME USE TRIBOLUBE L−3 SYNTHETIC GEAR OIL BY AEROSPACE LUBRICANTS, INC., COLUMBUS, OHIO 43212, OR SYNTHETIC GEAR OIL BY RADIATION SYSTEMS, INC., LARGO, FLORIDA.

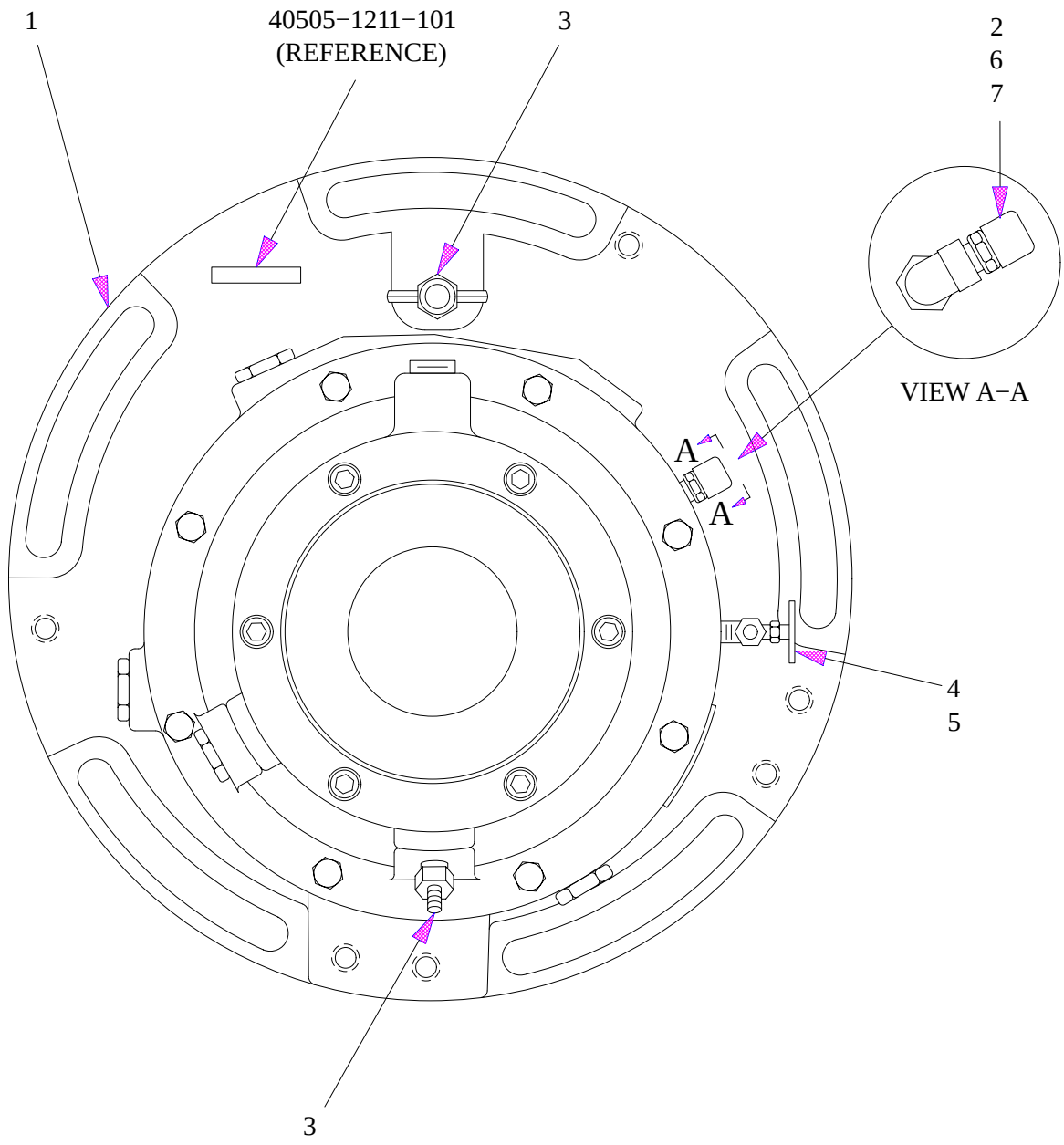

FULL SCALE PRODUCTION
AZIMUTH ASSEMBLY ONLY

NX1134

FIGURE 11. Gearbox Assembly, UD2A1A1A3 and UD 2A1A3A3 (Sheet 1 of 3)

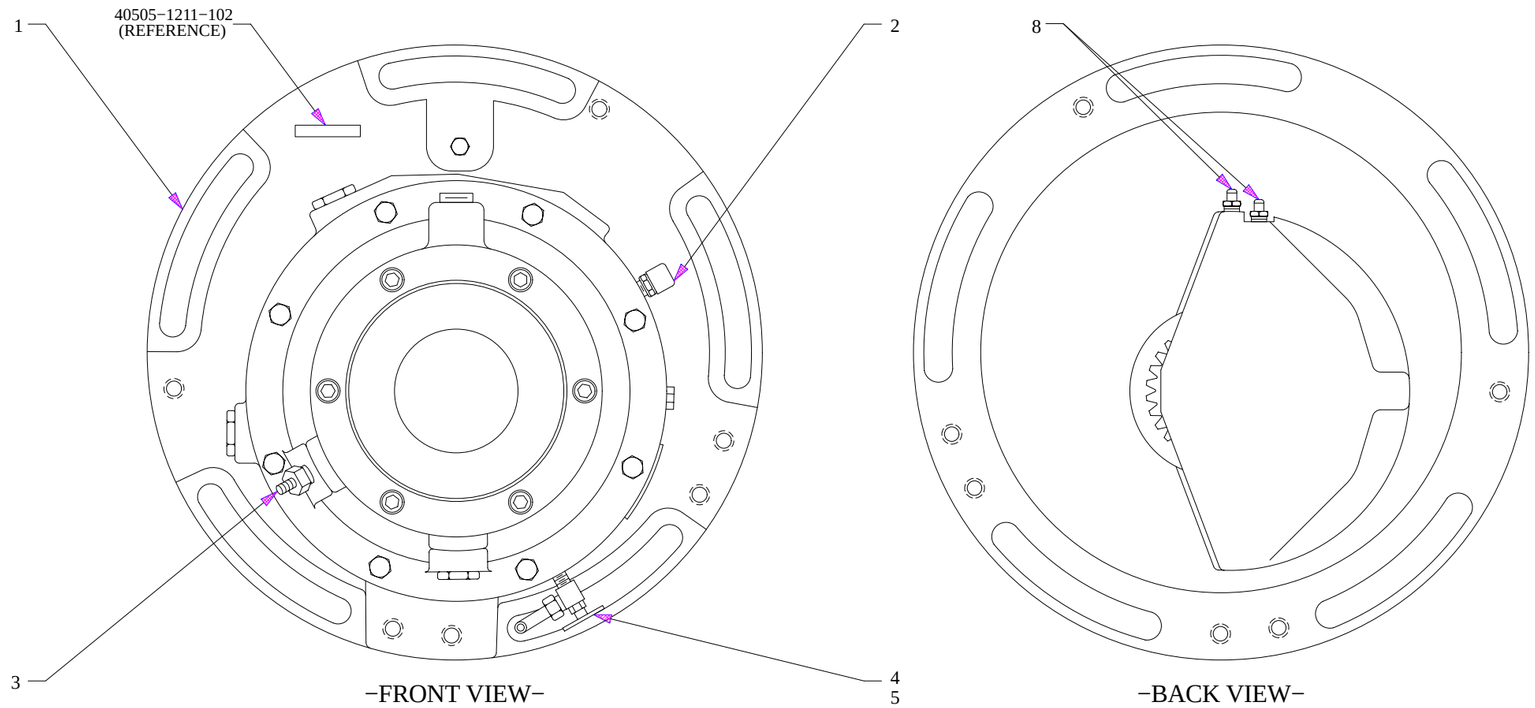

FULL SCALE PRODUCTION ELEVATION
ASSEMBLY ONLY

NX1135

FIGURE 11. Gearbox Assembly, UD2A1A1A3 and UD2A1A3A3 (Sheet 2 of 3)

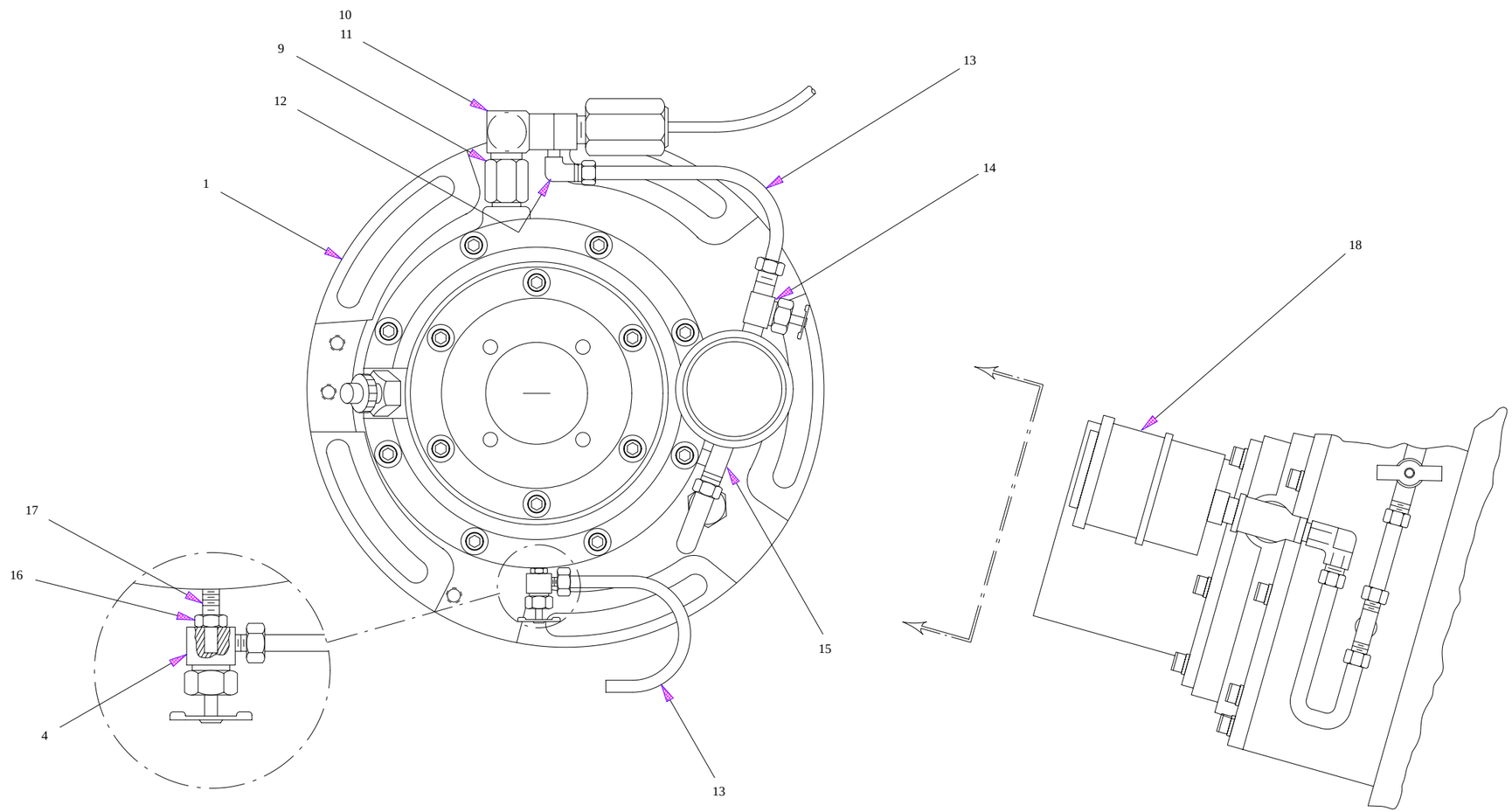

GEARBOX ASSEMBLY WITH SPEED REDUCER
(LIMITED PRODUCTION AZIMUTH AND
ELEVATION ASSEMBLIES ONLY)

NX1136

FIGURE 11. Gearbox Assembly, UD2A1A1A3 and UD2A1A3A3 (Sheet 3 of 3)

FIGURE AND INDEX NO.	REF DES	PART NUMBER	INDENT	DESCRIPTION	CAGE CODE	QTY PER ASSY	CODES SMR	CODES USABLE ON
11−	2A1A1A3 2A1A3A3	44636−2199−101	1	GEARBOX ASSEMBLY WITH SPEED REDUCER (For NHA see FIGURE 5 on Page 2 − 90)	1M813	REF	XB	A
11−1	2A1A1A3A1 2A1A3A3A1	14636−5003−3	2	GEARBOX, DIFFERENTIAL PLANETARY	1M813	1	PAFLD	A B C
11−2	2A1A1A3MP1 2A1A3A3MP1	1631−01200−1	2	VENT, BREATHER, 1/8−27 NPT	2T731	1	PAOZZ	C B
11−3	2A1A1A3MP2	6783	2	DRAIN COCK, 1/8−NPT, INT, SEAT	79470	1	PAOZZ	C
	2A1A3A3MP2	6783	2	DRAIN COCK, 1/8−NPT, INT, SEAT	79470	2	PAOZZ	B
11−4	2A1A1A3MP3	A555S	2	VALVE, COMP−ANGLE, 1/8−27 NPT	79470	1	PAOZZ	A B
	2A1A3A3MP3	A555S	2	VALVE, COMP−ANGLE, 1/8−27 NPT	79470	1	PAOZZ	C
11−5	2A1A1A3MP4 2A1A3A3MP4	5000301	2	TUBING, COPPER, 1/4 O.D.	1M813	6 IN	PAOZZ	C B
11−6	2A1A3A3MP16	C3409X2	2	ELBOW 90 DEG STREET 1/8−27 NPT	79470	1	PAOZZ	B
11−7	2A1A3A3MP6	9995252−2 (IPB)	2	ADAPTER, 1/8−27 NPT, MALE/FEMALE	79470	1	PAOZZ	B
11−8		MS15003−1	2	FITTING, LUBRICATION	96906	2	PAOZZ	C
11−9	2A1A1A3MP7 2A1A3A3MP7	C3269X8X8	2	ADAPTER, STRAIGHT THREAD	79470	1	PAOZZ	A
11−10	2A1A1A3MP8 2A1A3A3MP8	C3409X8	2	ELBOW, 90 DEGREE STREET 1/8−27 NPT	79470	1	PAOZZ	A
11−11	2A1A1A3MP9 2A1A3A3MP9	C3239X8X8	2	ADAPTER, FEMALE STR., TO MALE PI.	79470	1	PAOZZ	A
11−12	2A1A1A3MP10 2A1A3A3MP10	MS39171−13 (IPB)	2	ELBOW, MALE, 1/4 TUBE	96906	1	PAOZZ	A
11−13	2A1A1A3MP11	1/4 20 B&S (IPB)	2	TUBE, COPPER, 1/4 (1M813) (ALT PN 1025616)	8N225	2.5 FT	PAOZZ	A
11−14	2A1A1A3MP12 2A1A3A3MP12	NV105C−4	2	VALVE, NEEDLE, 1/4 TUBE	93061	1	PAOZZ	A
11−15	2A1A1A3MP13 2A1A3A3MP13	72X4	2	TEE, BRANCH, 1/4 TUBE TO 1/8 PIP	79470	1	PAOZZ	A

NOTE * : NOT SHOWN

NOTE ** : FOR SITES WHERE THE OPERATING TEMPERATURE FALLS TO −40 DEGREES CELSIUS FOR EXTENDED PERIODS OF TIME USE TRIBOLUBE L−3 SYNTHETIC GEAR OIL BY AEROSPACE LUBRICANTS, INC., COLUMBUS, OHIO 43212, OR SYNTHETIC GEAR OIL BY RADIATION SYSTEMS, INC., LARGO, FLORIDA.

FIGURE AND INDEX NO.	REF DES	PART NUMBER	INDENT	DESCRIPTION	CAGE CODE	QTY PER ASSY	CODES SMR	CODES USABLE ON
11−16	2A1A1A3MP14 2A1A3A3MP14	MS51967−2	2	NUT, HEX, 1/4−20, CAD PLATTED	96906	1	PAOZZ	A
11−17	2A1A1A3MP15 2A1A3A3MP15	98804A029	2	ROD, THREADED, 1/4−20 CRES	39428	1	PAOZZ	A
11−18	2A1A1MP100 2A1A3MP100	1028697	2	EXPANSION CHAMBER	1M813	1	PAOZZ	A
11−19	* **	SCH 75W	2	OIL, LUBRICATING, SYNTHETIC, IN 5 GALLON CAN	12939	AR	PAOZZ	A B C

USABLE ON CODES

A − LIMITED PRODUCTION AZIMUTH AND ELEVATION ASSEMBLIES

B − FULL SCALE PRODUCTION AZIMUTH ASSEMBLY

C − FULL SCALE PRODUCTION ELEVATION ASSEMBLY

NOTE * : NOT SHOWN

NOTE ** : FOR SITES WHERE THE OPERATING TEMPERATURE FALLS TO −40 DEGREES CELSIUS FOR EXTENDED PERIODS OF TIME USE TRIBOLUBE L−3 SYNTHETIC GEAR OIL BY AEROSPACE LUBRICANTS, INC., COLUMBUS, OHIO 43212, OR SYNTHETIC GEAR OIL BY RADIATION SYSTEMS, INC., LARGO, FLORIDA.

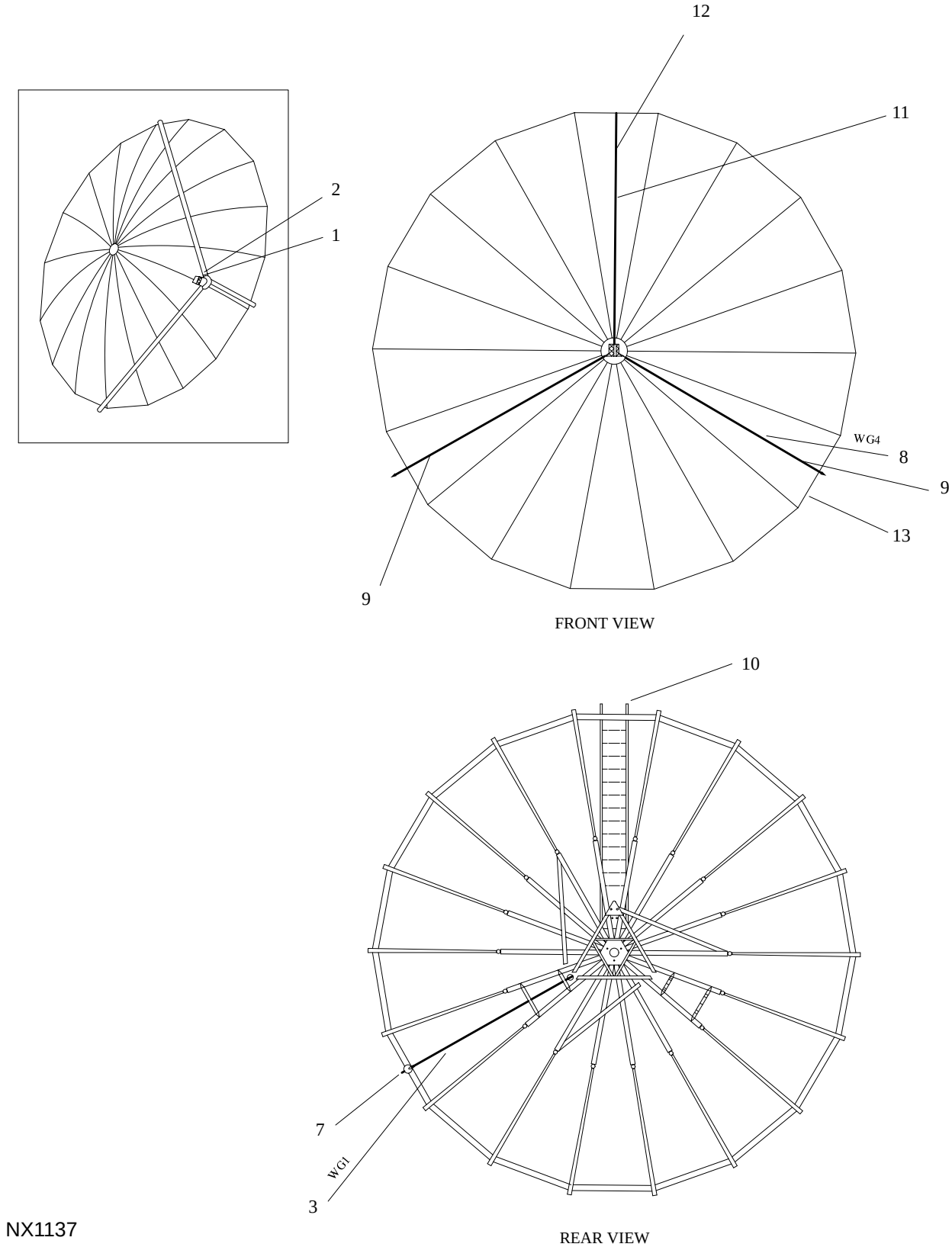

FIGURE 12. Feed Antenna Assembly, UD2A2

FIGURE AND INDEX NO.	REF DES	PART NUMBER	INDENT	DESCRIPTION	CAGE CODE	QTY PER ASSY	CODES SMR	CODES USABLE ON
12−	2A2	171750X	1	FEED ANTENNA ASSEMBLY (For NHA see FIGURE 3 on Page 2 − 57)	35844	REF	XA	A
	2A2	172560X	1	FEED ANTENNA ASSEMBLY (For NHA see FIGURE 3 on Page 2 − 57)	35844	REF	PBFDD	B
12−1	2A2A1	172816X	2	FEED/POLARIZER ASSEMBLY	35844	1	PBFDD	B
	2A2A1	171730X	2	FEED/POLARIZER ASSEMBLY	35844	1	PBDDD	A
12−2	2A2A1MS1	171864X	3	FEED WINDOW	35844	1	PAOZZ	
12−3	2A2A1WG1	78652X	2	REAR WAVEGUIDE SECTION	35844	1	PAOZZ	
12−4	*	171791X	2	WAVEGUIDE AND FEED SUPPORT RACK	35844	1	XB	A
12−5	*	172564X	2	WAVEGUIDE AND FEED SUPPORT RACK	35844	1	XB	B
12−6	*	55224−284	3	WAVEGUIDE KIT	35844	1	PAOZZ	
12−7		B10683−508	4	GASKET, WAVEGUIDE	35844	1	XB	
12−8	2A2WG4	171747X	2	FEED SUPPORTING WAVEGUIDE	35844	2	PAOZZ	
12−9	2A2WG4MP1	173219X	3	ABSORBER	35844	8	PAOZZ	
12−10	2MP1	172670X	2	LADDER KIT ASSEMBLY	35844	1	PBFDD	
12−11		171748X	2	FEED SUPPORT STRUT	35844	1	PAFZZ	
12−12	2A2WG4MP1	173219X	3	ABSORBER	35844	8	PAOZZ	
12−13	2A2A1MS3	171789X	2	SKIN PANEL PACK (DISH)	35844	1	PBFDD	
12−14	2A2A1MP1 * THRU 2A2A1MP18	171740X	3	REFLECTOR SKIN PANEL	35844	18	PAFZZ	
		USABLE ON CODES A − LIMITED PRODUCTION B − FULL SCALE PRODUCTION						
	NOTE * : NOT SHOWN							

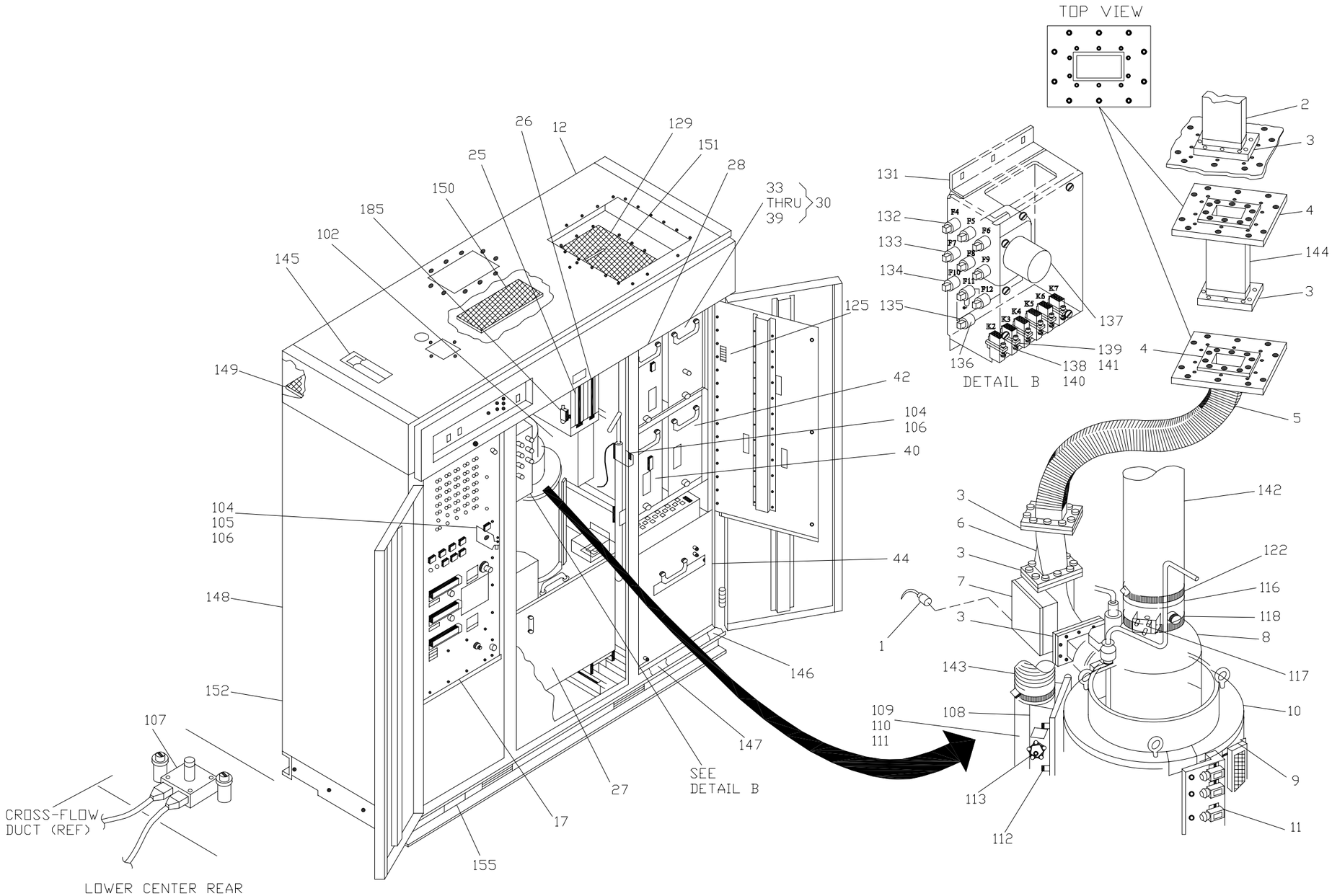

FIGURE 13. Radar Transmitter, UD3 (Sheet 1 of 4)

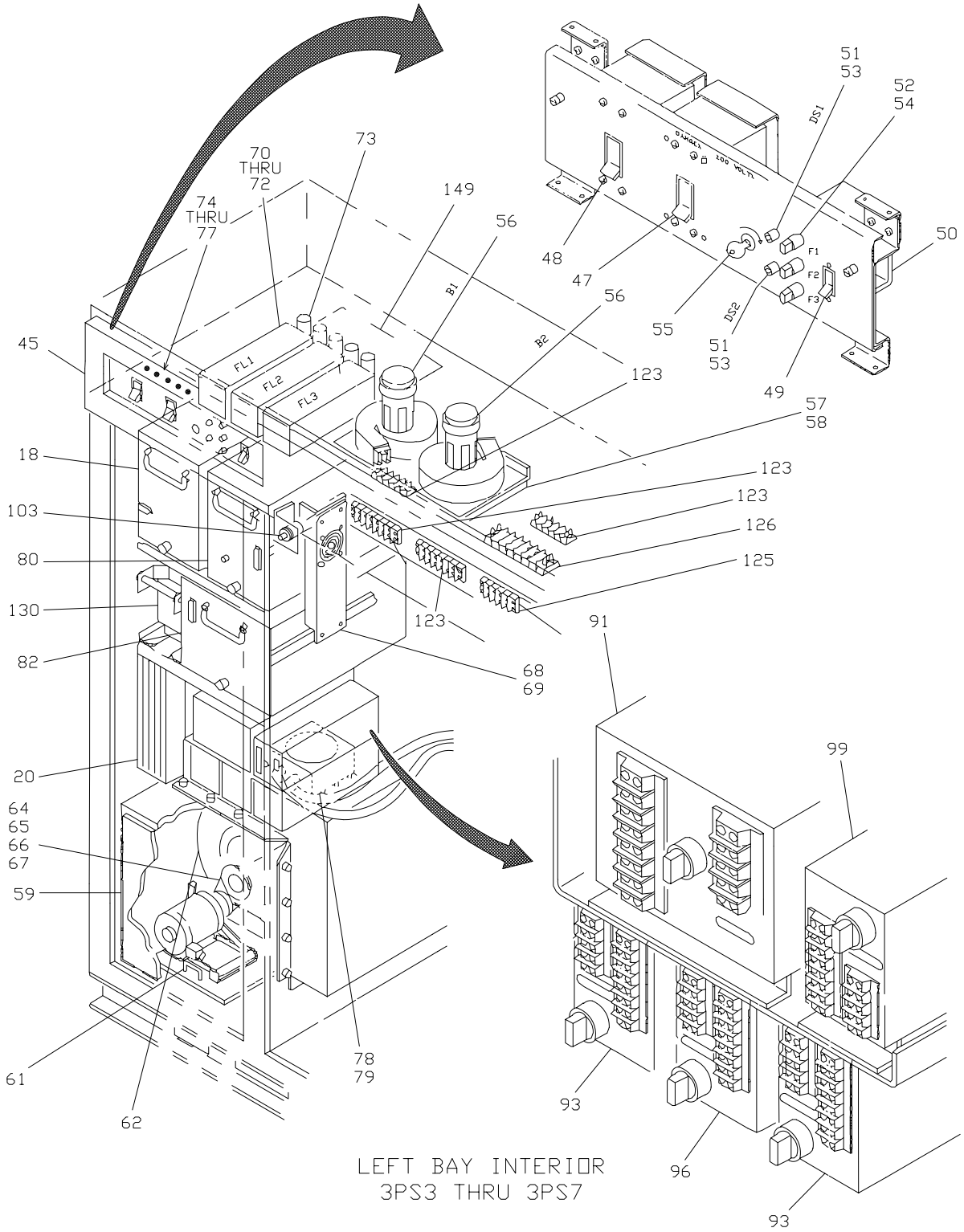

NX1139

FIGURE 13. Radar Transmitter, UD3 (Sheet 2 of 4)

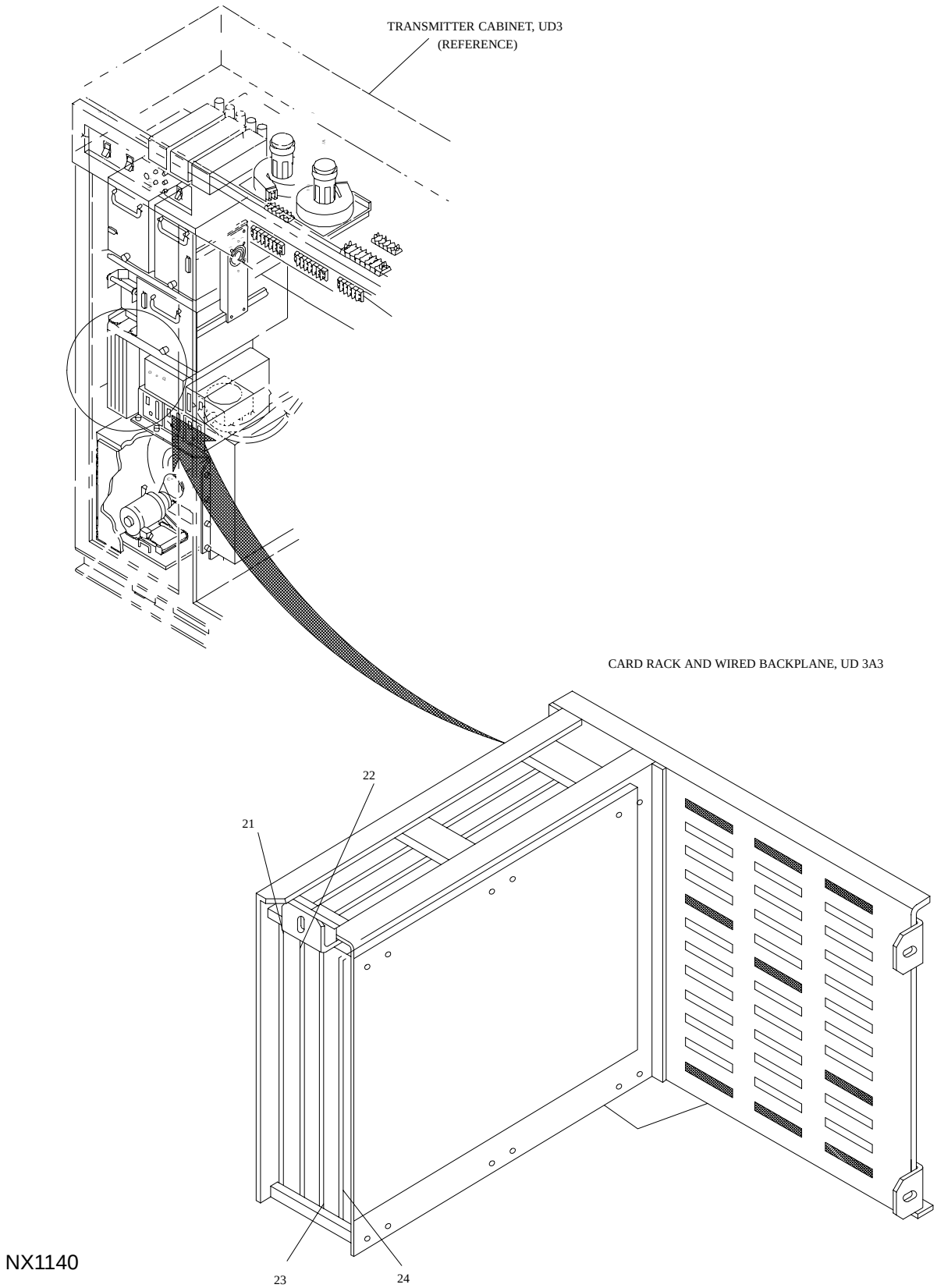

FIGURE 13. Radar Transmitter, UD3 (Sheet 3 of 4)

CABLE ASSEMBLIES (NOT SHOWN)

INDEX NO.	REF DES	FROM	TO
13−156	3W1	P1(A3J14)	P2(A2J1)
13−157	3W2	P1(A3J27)	P2(A11A1J1)
13−158	3W3	P1(A3J28)	P2(A10A1J1)
13−159	3W4	P1(A3J29)	P2(A8A1J1)
13−160	3W5	P1(A3J26)	P2(A12J3)
13−161	3W6	P1(A3J31)	P2(A5J1)
13−162	3W7	P1(A3J15)	P2(PS1A1J1)
13−163	3W8	P1(A3J16)	P2(PS2A1J1)
13−164	3W9	P1(A3J19)	P2(J1)
13−165	3W10	P1(A3J20)	P2(J2)
13−166	3W11	P1(A3J21)	P2(J3)
13−167	3W14	P1(A3J2)	P2(A1A1J1)
13−168	3W15	P1(A3J3)	P2(A1A1J2)
13−169	3W16	P1(A3J4)	P2(A1A1J3)
13−170	3W17	P1(A3J7)	P2(A1J1)
13−171	3W18	P1(A3J8)	P2(A1J2)
13−172	3W19	P1(A3J9)	P2(A1J3)
13−173	3W20	P1(A3J10)	P2(A1J4)
13−174	3W21	P1(A3J32)	P2(A4J1)
13−175	3W22	P1(J9)	P2(A6J2)
13−176	3W101	P1(J4)	P2(A4J2)
13−177	3W102	P1(A4J4)	P2(A5J2)
13−178	3W103	P1(AT1J1)	P2(A5J3)
13−179	3W104	P1(AT1J2)	P2(V1 RF DRIVE 1/P)
13−180	3W105	P1(J1)	P2(A5J4)
13−184	3W900	P1(XA8) A12E10	A12E2 P2(XA8)*
13−185	3W901	P1(XA11) A12E4	A12E3 P2(XA11)*
13−186	3W902	A12E7−A A12E7−B A12E8−A A12E8−B	A07−EZ1
13−187	3/103W904	P1(3J08)	P2(3A3J06)
13−188	3/103W905	P1(3J09)	P2(3A3J11)

* SHIELD

FIGURE 13. Radar Transmitter, UD3 (Sheet 4 of 4)

FIGURE AND INDEX NO.	REF DES	PART NUMBER	INDENT	DESCRIPTION	CAGE CODE	QTY PER ASSY	CODES	
								USABLE ON
13−	3 103	2500003−301	1	TRANSMITTER, RADAR, HIGH RELIABILITY (Replaces (97942) (PN 1D28370G01)) (For NHA see FIGURE 2 on Page 2 − 17)	0WY55	REF	PBFDD	
13−1	3J9	M55339/28−30001	2	ADAPTER	81349	1	PAOZZ	
13−2	3DC1	1D19766H03	2	DIRECTIONAL COUPLER, 30DB (66775) (ALT PN C284BL1)	97942	1	PAOLD	
				(ATTACHING PARTS)				
		MS16996−24	2	SCREW	80205	10	PAOZZ	
		MS35338−139	2	WASHER	96906	10	PAOZZ	
		AN960C416	2	WASHER	88044	10	PAOZZ	
				− − − − − − − − −				
13−3		M24211/2−005	2	GASKET, PRESSURE SEALING, EMI SHIELDING, 0.125 IN. THK	81349	5	PAOZZ	
13−4		645A780H15	2	SHIELDING GASKET, RFI/EMI, 6.31 X 4.81 X 0.063 IN.THK	97942	1	PAOZZ	
13−5	3WG1	124874	2	WAVEGUIDE, FLEXIBLE (97942) (spec dwg 156C825H01)	80006	1	PAOZZ	
				(ATTACHING PARTS)				
		MS16996−24	2	SCREW	80205	10	PAOZZ	
		MS16996−25	2	SCREW	80205	10	PAOZZ	
		MS35338−139	2	WASHER	96906	20	PAOZZ	
		AN960C416	2	WASHER	88044	20	PAOZZ	
		MS35650−3254	2	NUT	96906	10	PAOZZ	
				− − − − − − − − −				
13−6	3WG2	124873	2	WAVEGUIDE, TWIST, 45 DEG (97942) (spec dwg 156C824H01)	80006	1	PAOZZ	
				(ATTACHING PARTS)				
		MS16995−52	2	SCREW	96906	10	PAOZZ	
		MS35338−139	2	WASHER	96906	10	PAOZZ	
		AN960C416	2	WASHER	88044	10	PAOZZ	
				− − − − − − − − −				
13−7	3A6	1D20332H04A	2	ARC DETECTOR	97942	1	PAOLD	
	NOTE * :	NOT SHOWN						

FIGURE AND INDEX NO.	REF DES	PART NUMBER	INDENT	DESCRIPTION	CAGE CODE	QTY PER ASSY	CODES	
								USABLE ON
				(ATTACHING PARTS)				
		MS16995−52	2	SCREW	96906	10	PAOZZ	
		MS35338−139	2	WASHER	96906	10	PAOZZ	
		AN960C416	2	WASHER	88044	10	PAOZZ	
				− − − − − − − − −				
13−8	3V1	L−5782−20	2	ELECTRON TUBE, KLYSTRON (18778) (ALT PN TH2101) (99313) (ALT PN VKS−8287) (56232) (spec dwg 1213614−201)	80080	1	PAOLA	
13−9	3L1MS1	156C864H01	2	FILTER, INLET	97942	1	PAOZZ	
13−10	3L1A1	TH20199A(MODIFIED)	2	TUBE, FOCUS W/O TUNING MECHANISM (99313) (ALT PN VA−1587F) (15766) (ALT PN 41C2081) (66775) (ALT PN GA−1587L) (56232) (source ctrl dwg 1217084−201)	18778	1	PAOLD	
				(ATTACHING PARTS)				
		MS51958−60	2	SCREW	96906	12	PAOZZ	
		MS35338−138	2	WASHER	96906	12	PAOZZ	
		MS15795−842	2	WASHER	96906	12	PAOZZ	
				− − − − − − − − −				
13−11	3L1A2	TH20211A(MODIFIED)	3	TUNING MECHANISM ASSEMBLY (99313) (ALT PN 64276(MODIFIED)) (80080) (ALT PN 430800(MODIFIED)) (66775) (ALT PN 01060912) (56232) (source ctrl dwg 1217084−202)	18778	1	PAOLD	
13−12		2500015−301	2	TRANSMITTER CABINET ASSEMBLY	0WY55	1	XB	
13−13	*	126B784H01	3	CLAMP, CONDUIT	97942	1	PAOZZ	
13−14	*	126B757H01	3	KEEPER, LATCH	97942	1	PAOZZ	
13−15	*	157C110H01	3	SHIELD TWIN LAMP	97942	1	PAOZZ	
13−16	*	16−10−413−14	3	LATCH, ADJUSTABLE GRIP (97942) (spec dwg 645A914H02)	94222	1	PAOZZ	
13−17	3A1	1D20992G01	3	CONTROL PANEL (For breakdown see FIGURE 14 on Page 2 − 145)	97942	1	PAODD	
13−18	3A2	3D59372G01	3	POWER SUPPLY ASSEMBLY, 280V	97942	1	PAOLD	
	NOTE * : NOT SHOWN							

FIGURE AND INDEX NO.	REF DES	PART NUMBER	INDENT	DESCRIPTION	CAGE CODE	QTY PER ASSY	CODES	
								USABLE ON
13−19	*	16−10−213−14	3	LATCH, ADJUSTABLE GRIP (97942) (spec dwg 1A20683H02)	94222	1	PAOZZ	
13−20	3A3	1D20998G01	3	BACKPLANE ASSEMBLY AND CARD RACK	97942	1	PAODD	
		2500020−301	3	FAA MODIFIED BACKPLANE ASSEMBLY AND CARD RACK	0WY55	1	PAODD	C
				(ATTACHING PARTS)				
		MS51958−67	3	SCREW	96906	2	PAOZZ	
		MS35338−138	3	WASHER	96906	2	PAOZZ	
		AN960C10L	3	WASHER	88044	2	PAOZZ	
		A1006−1032	3	NUT, 0.190−32 W/SPRING (97942) (spec dwg 645A836H24)	96195	2	PAOZZ	
				− − − − − − − − −				
13−21	3A3A1	706J716G01	4	PRINTED WIRING ASSEMBLY TRANSMITTER CONTROLLER LOGIC	97942	1	PAOLD	
13−22	3A3A2	706J225G01	4	PRINTED WIRING ASSEMBLY TRANSMITTER CONTROL INTERFACE	97942	1	PAOLD	
13−23	3A3A3	706J221G01	4	PRINTED WIRING ASSEMBLY RMS INTERFACE	97942	1	PAOLD	
13−24	3A3A4	706J233G01	4	PRINTED WIRING ASSEMBLY CONTROL ADAPTER	97942	1	PAOLD	
13−25	3A4	645A794A02	3	RF DRIVER MODULE	97942	1	PAODD	
				(ATTACHING PARTS)				
		51−16−709−24	3	SCREW, CAPTIVE, 10−32 UNF−2A X 0.938 IN. LG. (97942) (spec dwg 579R752H01)	94222	2	PAOZZ	
				− − − − − − − − −				
13−26	3A5	1A20768A01	3	MODULE, PULSE SHAPER	97942	1	PAOLD	
				(ATTACHING PARTS)				
		M24308/26−1F	3	SCREW	81349	2	PAOZZ	
				− − − − − − − − −				
13−27	3A7	1D20987G01	3	OIL TANK ASSEMBLY (For breakdown see FIGURE 15 on Page 2 − 151)	97942	1	PAODD	
	NOTE * :	NOT SHOWN						

FIGURE AND INDEX NO.	REF DES	PART NUMBER	INDENT	DESCRIPTION	CAGE CODE	QTY PER ASSY	CODES	
								USABLE ON
13−28	3A8	2500004−301	3	POST CHARGE REGULATOR, HIGH RELIABILITY (Replaces (97942) (1D20993G01))	0WY55	1	PAOLD	
13−29	*	16−10−213−14	3	LATCH, ADJUSTABLE GRIP (97942) (spec dwg 1A20683H02)	94222	1	PAOZZ	
13−30	3A9	3D59371G01	3	FILTER CAPACITOR BANK	97942	1	PAODD	
13−31	*	16−10−213−14	3	LATCH, ADJUSTABLE GRIP (97942) (spec dwg 1A20683H02)	94222	1	PAOZZ	
13−32	*	155C867G01	3	SHORTING SWITCH	97942	1	PAOZZ	
13−33	3A9MP4	1D20519H01	4	BUS BAR NO. 1	97942	4	PAOZZ	
13−34	3A9MP5	1D20520H01	4	BUS BAR NO. 2	97942	4	PAOZZ	
13−35	3A9MP6	155C872H01	4	BUS BAR NO. 3	97942	2	PAOZZ	
13−36	3A9R1	RER75F80R6R	4	RESISTOR	81349	1	PAOZZ	
13−37	3A9R2	RER75F51R1R	4	RESISTOR	81349	1	PAOZZ	
13−38	3A9MS1	582R209H23	4	HANDLE, FOLDING	97942	1	PAOZZ	
13−39	3A9C1 THRU 3A9C20	32D901F450DF2B	4	CAPACITOR, 900 UF +75% −10%, 450VDC (97942) (spec dwg 142C846H02)	7M138	20	PAOZZ	
13−40	3A10	1D20990G01	3	CHARGING SWITCH	97942	1	PAOLD	
13−41	*	16−10−213−14	3	LATCH, ADJUSTABLE GRIP (97942) (spec dwg 1A20683H02)	94222	1	PAOZZ	
13−42	3A11	2500008−301	3	TRIGGER AMPLIFIER (MODIFIED)	0WY55	1	PAOLD	
13−43	*	16−10−213−14	3	LATCH, ADJUSTABLE GRIP (97942) (spec dwg 1A20683H02)	94222	1	PAOZZ	
13−44	3A12	612J408G01	3	MODULATOR PULSE ASSEMBLY (For breakdown see FIGURE 16 on Page 2 − 159) (When exhausted replace with (0WY55) (PN 2500006−301))	97942	1	PAODD	
	3A12	2500006−301	3	MODULATOR PULSE ASSEMBLY, HIGH RELIABILITY	0WY55	1	PAODD	
13−45	3A13	3D59511G01	3	POWER DISTRIBUTION PANEL	97942	1	XB	
	NOTE * : NOT SHOWN							

FIGURE AND INDEX NO.	REF DES	PART NUMBER	INDENT	DESCRIPTION	CAGE CODE	QTY PER ASSY	CODES	
								USABLE ON
				(ATTACHING PARTS)				
		MS51958−62	3	SCREW	96906	4	PAOZZ	
		MS51958−64	3	SCREW	96906	4	PAOZZ	
		MS35338−138	3	WASHER	96906	8	PAOZZ	
		MS15795−842	3	WASHER	96906	8	PAOZZ	
				− − − − − − − − −				
13−46	*	157C067H01	3	INSULATOR, CIRCUIT BREAKER	97942	1	PAOZZ	
13−47	3A13CB1	GH3−Z130−1	4	CIRCUIT BREAKER, 480V, 50A (97942) (spec dwg 646A059H03)	74193	1	PAOZZ	
				(ATTACHING PARTS)				
		MS35275−228	4	SCREW	96906	4	PAOZZ	
		MS35338−136	4	WASHER	96906	4	PAOZZ	
		MS15795−806	4	WASHER	96906	4	PAOZZ	
				− − − − − − − − −				
13−48	3A13CB2	GH3−Z130−2	4	CIRCUIT BREAKER, 480V, 15A (97942) (spec dwg 646A059H04)	74193	1	PAOZZ	
				(ATTACHING PARTS)				
		126B745H01	4	SCREW, SPECIAL, 0.190−32UNC−3A X 5.06 IN. LG.	97942	4	PAOZZ	
		MS15795−842	4	WASHER	96906	4	PAOZZ	
				− − − − − − − − −				
13−49	3A13CB3	M55629/1−094	4	CIRCUIT BREAKER	81349	1	PAOZZ	
				(ATTACHING PARTS)				
		MS35275−229	4	SCREW	96906	2	PAOZZ	
		MS35338−136	4	WASHER	96906	2	PAOZZ	
		NAS620C6	4	WASHER	80205	2	PAOZZ	
				− − − − − − − − −				
13−50		157C069H01	4	INSULATOR, CIRCUIT BREAKER	97942	1	PAOZZ	
				(ATTACHING PARTS)				
		MS51958−64	4	SCREW	96906	2	PAOZZ	
		MS35338−138	4	WASHER	96906	2	PAOZZ	
		MS15795−842	4	WASHER	96906	2	PAOZZ	
	NOTE * :	NOT SHOWN						

FIGURE AND INDEX NO.	REF DES	PART NUMBER	INDENT	DESCRIPTION	CAGE CODE	QTY PER ASSY	CODES	
								USABLE ON
		NAS1831H6E16	4	POST	80205	2	PAOZZ	
				− − − − − − − − −				
13−51	3A13DS6 3A13DS7	MS18235−3RT	4	LAMP (83330) (ALT PN 507−3918−1471−600)	96906	2	PAOZZ	
13−52	3A13F1 THRU 3A13F3	F02A250V5A	4	FUSE	81349	3	PAOZZ	
13−53	3A13XDS6 3A13XDS7	LH90/1	4	LAMPHOLDER	81349	2	PAOZZ	
13−54	3A13XF1 THRU 3A13XF3	FHL17G1	4	FUSEHOLDER	81349	3	PAOZZ	
13−55	3A13MP1	15749	4	LOCK ASSEMBLY (97942) (selected item dwg 1A20033H10)	14608	1	PAOZZ	
13−56	3B1 3B2	645A690H03	3	BLOWER, CENTRIFUGAL	97942	2	PAOZZ	
				(ATTACHING PARTS)				
		MS51957−46	3	SCREW	96906	4	PAOZZ	
		MS35338−134	3	WASHER	96906	4	PAOZZ	
		MS15795−802	3	WASHER	96906	4	PAOZZ	
		MS35649−224	3	NUT	96906	4	PAOZZ	
				− − − − − − − − −				
13−57	3B1MP1	645A859H01	3	GASKET, BLOWER PLATE	97942	1	PCOZZ	
13−58	3B1MP2	157C295H01	3	GASKET, BLOWER	97942	2	PCOZZ	
13−59	3B3	2500017−301	3	BLOWER ASSEMBLY, MODIFIED (97942) (ALT PN 3D59743G01)	0WY55	1	PAODD	
				(ATTACHING PARTS)				
		MS51958−67	3	SCREW	96906	2	PAOZZ	
		MS15795−842	3	WASHER	96906	2	PAOZZ	
				− − − − − − − − −				
13−60	*	161C424H01	3	ISOLATOR	97942	1	PAOZZ	
13−61	3B3MP10	3D59736H01	4	PLATE, MOTOR BLOWER	97942	1	PAOZZ	
13−62	3B3B2	2500016−301	4	BLOWER, MODIFIED (97942) (ALT PN 3D59767G01)	0WY55	1	PAOLD	
				(ATTACHING PARTS)				
		MS24693−C97	4	SCREW	96906	4	PAOZZ	
		MS35338−139	4	WASHER	96906	4	PAOZZ	
	NOTE * :	NOT SHOWN						

FIGURE AND INDEX NO.	REF DES	PART NUMBER	INDENT	DESCRIPTION	CAGE CODE	QTY PER ASSY	CODES	
								USABLE ON
		AN960C416	4	WASHER	88044	4	PAOZZ	
		MS35649−2254	4	NUT	96906	4	PAOZZ	
				− − − − − − − − −				
13−63	3B3B2MP1 *	2310009−301	3	BRACKET, BLOWER ASSEMBLY	0WY55	2	PAOZZ	
13−64		MS20066−143	4	KEY	96906	1	PAOZZ	
13−65	3B3MP1	3VX265	4	BELT (97942) (spec dwg 588R721H04)	16563	1	PAOZZ	
	3B3MP1	3VX257	4	BELT (0WY55) (spec dwg 2200052−201)	16563	1	PAOZZ	
13−66	3B3MP9	161C275G01	4	SHEAVE, 4.12 IN. DIA	97942	1	PAOZZ	A
13−67	3B3MP20	161C276G01	4	SHEAVE, 4.75 IN. DIA	97942	1	PAOZZ	B
13−68	3B4	141LS−282	3	FAN, TUBEAXIAL, 115VAC (97942) (spec dwg 646A048H01)	60856	1	PAOZZ	
13−69		MS35489−33	3	GROMMET	96906	4	PCOZZ	
13−70	3FL1	RF11692	3	FILTER, RFI (97942) (spec dwg 1D20420H01)	13619	3	PAOLD	
				(ATTACHING PARTS)				
		MS35650−3254	3	NUT	96906	12	PAOZZ	
		MS35338−139	3	WASHER	96906	12	PAOZZ	
		AN960C416	3	WASHER	88044	12	PAOZZ	
				− − − − − − − − −				
13−71		645A780H16	3	SHIELDING GASKET, RFI/EMI 4.00 X 2.50 X 0.063 IN.THK	97942	3	PAOZZ	
13−72		645A780H17	3	SHIELDING GASKET, RFI/EMI 4.00 X 0.76 X 0.063 IN.THK	97942	3	PAOZZ	
13−73	3FL4 THRU 3FL8	M15733/74−0059	3	FILTER	81349	5	PAOZZ	
				(ATTACHING PARTS)				
		MS51957−45	3	SCREW	96906	2	PAOZZ	
		MS35338−137	3	WASHER	96906	2	PAOZZ	
		MS15795−841	3	WASHER	96906	2	PAOZZ	
				− − − − − − − − −				
13−74		3D55673G01	3	FILTER PLATE	97942	1	XB	
				(ATTACHING PARTS)				
		MS51957−46	3	SCREW	96906	12	PAOZZ	
	NOTE * :	NOT SHOWN						

FIGURE AND INDEX NO.	REF DES	PART NUMBER	INDENT	DESCRIPTION	CAGE CODE	QTY PER ASSY	CODES	
								USABLE ON
		MS35338−137	3	WASHER	96906	12	PAOZZ	
		MS15795−841	3	WASHER	96906	12	PAOZZ	
		MS35649−284	3	NUT	96906	12	PAOZZ	
				− − − − − − − − −				
13−75	3FL9 THRU 3FL13	M15733/61−0013	4	FILTER	81349	1	PAOZZ	
13−76		745777−3	4	GASKET, ELECTRICAL CONNECTOR, 2.73 X 0.80 X 0.006 IN. THK (97942) (spec dwg 645A825H04)	00779	3	PAOZZ	
13−77		645A780H14	3	SHIELDING GASKET, RFI/EMI 10.76 X 5.26 X 0.063 IN. THK	97942	1	PAOZZ	
13−78	3HP1	5201G1	3	HEAT EXCHANGER (97942) (spec dwg 645A680H01)	11245	1	PAOZZ	
				(ATTACHING PARTS)				
		MS51957−46	3	SCREW	96906	6	PAOZZ	
		MS15795−841	3	WASHER	96906	6	PAOZZ	
				− − − − − − − − −				
13−79		604B018H01	3	GASKET, SHIELDING, NO.1, 1.50 IN. D. X 0.062 IN. THK	97942	2	PAOZZ	
13−80	3PS1	1D28368G01	3	FILAMENT POWER SUPPLY	97942	1	PAOLD	
13−81	*	16−10−213−14	3	LATCH, ADJUSTABLE GRIP (97942) (spec dwg 1A20683H02)	94222	1	PAOZZ	
13−82	3PS2	2500010−301	3	POWER SUPPLY, FOCUS COIL, HIGH RELIABILITY (Replaces (97942) (3D59369G01))	0WY55	1	PAOLD	
13−83	*	1D23102G01	3	INTERNAL STRUCTURE ASSEMBLY, LEFT BAY	97942	1	XB	
13−84	3PS1J1 3PS1J2 *	56000701000B	4	CONNECTOR (97942) (spec dwg 645A748H04)	13150	2	PAOZZ	
13−85	3T1P1 3T1P2 3PS2P2 3PS2P3 *	56000301000B	4	CONNECTOR (97942) (spec dwg 645A748H06)	13150	4	PAOZZ	
13−86	3A2P2 *	56001101000B	4	CONNECTOR (97942) (spec dwg 645A748H08)	13150	1	PAOZZ	
13−87	*	16−10−213−14	3	LATCH, ADJUSTABLE GRIP (97942) (spec dwg 1A20683H02)	94222	1	PAOZZ	
	NOTE * : NOT SHOWN							

FIGURE AND INDEX NO.	REF DES	PART NUMBER	INDENT	DESCRIPTION	CAGE CODE	QTY PER ASSY	CODES	
								USABLE ON
13−88	*	1D22324G01	3	STRUCTURE, INTERNAL RIGHT BAY	97942	4	PAOZZ	
13−89	*	138C864H01	3	V W CLIP ELECTRICAL	97942	1	PAOZZ	
13−90	3A2P1 *	56001301000B	4	CONNECTOR (97942) (spec dwg 645A748H10)	13150	1	PAOZZ	
13−91	3PS3	851500	3	POWER SUPPLY, +28V, 18A (97942) (spec dwg 1D20550H01)	09062	1	PAOLD	
13−92	*	F03A250V10A	4	FUSE	81349	1	PAOZZ	
				(ATTACHING PARTS)				
		MS51958−63	3	SCREW	96906	4	PAOZZ	
		MS35338−138	3	WASHER	96906	4	PAOZZ	
		MS15795−842	3	WASHER	96906	4	PAOZZ	
				− − − − − − − − −				
13−93	3PS4 3PS5	851600	3	POWER SUPPLY, +15V, 5A (97942) (spec dwg 1D20550H02)	09062	2	PAODD	
13−94	*	F03B250V2A	4	FUSE	81349	1	PAOZZ	
13−95	*	F03A250V8A	4	FUSE	81349	1	PAOZZ	
				(ATTACHING PARTS)				
		MS51958−64	3	SCREW	96906	8	PAOZZ	
		MS35338−138	3	WASHER	96906	8	PAOZZ	
		MS15795−842	3	WASHER	96906	8	PAOZZ	
				− − − − − − − − −				
13−96	3PS6	851700	3	POWER SUPPLY, +5V, 15A (97942) (spec dwg 1D20550H03)	09062	1	PAODD	
13−97	*	F03B125V5A	4	FUSE	81349	1	PAOZZ	
13−98	*	F03A125V20A	4	FUSE	81349	1	PAOZZ	
				(ATTACHING PARTS)				
		MS51958−64	3	SCREW	96906	4	PAOZZ	
		MS35338−138	3	WASHER	96906	4	PAOZZ	
		MS15795−842	3	WASHER	96906	4	PAOZZ	
				− − − − − − − − −				
13−99	3PS7	90D1680−9	3	POWER SUPPLY, +45V, 1.5A (97942) (spec dwg 1D20550H06)	09062	1	PAODD	
13−100	*	F03B250V2A	4	FUSE	81349	1	PAOZZ	
	NOTE * :	NOT SHOWN						

FIGURE AND INDEX NO.	REF DES	PART NUMBER	INDENT	DESCRIPTION	CAGE CODE	QTY PER ASSY	CODES	
								USABLE ON
13−101	*	F03A250V3A	4	FUSE	81349	1	PAOZZ	
				(ATTACHING PARTS)				
		MS51958−63	3	SCREW	96906	4	PAOZZ	
		MS35338−138	3	WASHER	96906	4	PAOZZ	
		MS15795−842	3	WASHER	96906	4	PAOZZ	
				− − − − − − − − −				
13−102	3PS8	1D20143G01	3	POWER SUPPLY, VACUUM PUMP	97942	1	PAOLD	
13−103	3S2 3S3	MS25089−2FR	3	SWITCH	96906	2	PAOZZ	
13−104	3S4 3S5	MS24547−5	3	SWITCH	96906	2	PAOZZ	
				(ATTACHING PARTS)				
		MS51957−7	3	SCREW	96906	2	PAOZZ	
		MS35338−134	3	WASHER	96906	2	PAOZZ	
		NAS620C2	3	WASHER	80205	2	PAOZZ	
		MS35649−224	3	NUT	96906	2	PAOZZ	
				− − − − − − − − −				
13−105		161C755G01	3	BYPASS TOOL ASSEMBLY	97942	1	PAOZZ	
13−106	3MP9	JX−44	3	ACTUATOR, SWITCH, SENSITIVE (97942) (spec dwg 580R016H02)	91929	2	PAOZZ	
13−107	3S7	159C632G01	3	PRESSURE SENSOR ASSEMBLY	97942	1	PAOZZ	
				(ATTACHING PARTS)				
		MS51957−20	3	SCREW	96906	1	PAOZZ	
				− − − − − − − − −				
13−108		1D23244G01	3	MANIFOLD ASSEMBLY	97942	1	XB	
13−109		1D23732G01	4	MANIFOLD	97942	1	XB	
13−110		1D23418H01	5	DUCT, MANIFOLD	97942	1	PAOZZ	
13−111		MS35489−9	4	GROMMET	96906	1	PCOZZ	
13−112		LC−022C−10SS	4	SPRING, HELICAL COMPRESSION (97942) (spec dwg 574R718H44)	84830	4	PAOZZ	
13−113	3S8	PSF106A−6638	4	SENSOR, PRESSURE, DIFFERENTIAL (97942) (spec dwg 645A856H05)	0C579	1	PAOZZ	
	NOTE * :	NOT SHOWN						

FIGURE AND INDEX NO.	REF DES	PART NUMBER	INDENT	DESCRIPTION	CAGE CODE	QTY PER ASSY	CODES	
								USABLE ON
				(ATTACHING PARTS)				
		MS35275−220	4	SCREW	96906	2	PAOZZ	
		MS35338−135	4	WASHER	96906	2	PAOZZ	
		MS15795−804	4	WASHER	96906	2	PAOZZ	
		MS3214−4	4	NUT	96906	2	PAOZZ	
				− − − − − − − − −				
13−114	*	MS35489−9	4	GROMMET	96906	1	PCOZZ	
13−115	*	572−4851−01−05−16	4	TERMINAL, INSULATED (97942) (spec dwg 142C524H02)	71279	3	PAOZZ	
				(ATTACHING PARTS)				
		MS51957−26	4	SCREW	96906	3	PAOZZ	
		NAS620C6	4	WASHER	80205	3	PAOZZ	
		MS35338−136	4	WASHER	96906	3	PAOZZ	
				− − − − − − − − −				
13−116		1D23315G01	3	DUCT, STOVE PIPE	97942	1	XB	
13−117	3S10	PSF106A−6639	4	SENSOR, PRESSURE, DIFFERENTIAL (97942) (spec dwg 645A856H06)	0C579	1	PAOZZ	
				(ATTACHING PARTS)				
		MS35275−220	4	SCREW	96906	2	PAOZZ	
				− − − − − − − − −				
13−118	3S9	1A20260H04	4	SWITCH, THERMOSTATIC	97942	1	PAOZZ	
				(ATTACHING PARTS)				
		MS51957−15	4	SCREW	96906	2	PAOZZ	
		MS35338−135	4	WASHER	96906	2	PAOZZ	
		MS15795−804	4	WASHER	96906	2	PAOZZ	
		MS35649−244	4	NUT	96906	2	PAOZZ	
				− − − − − − − − −				
13−119	*	MS35489−9	4	GROMMET	96906	1	PCOZZ	
13−120	*	572−4851−01−05−16	4	TERMINAL, INSULATED (97942) (spec dwg 142C524H02)	71279	3	PAOZZ	
				(ATTACHING PARTS)				
		MS51957−26	4	SCREW	96906	3	PAOZZ	
		NAS620C6	4	WASHER	80205	3	PAOZZ	
	NOTE * :	NOT SHOWN						

FIGURE AND INDEX NO.	REF DES	PART NUMBER	INDENT	DESCRIPTION	CAGE CODE	QTY PER ASSY	CODES	
								USABLE ON
		MS35338−136	4	WASHER	96906	3	PAOZZ	
				− − − − − − − − −				
13−121	*	4230	3	ELBOW, CONDUIT (97942) (spec dwg 347C095H01)	56501	1	PAOZZ	
13−122		MS35489−62	3	GROMMET	96906	6	PAOZZ	
13−123	3TB3 3TB5 3TB6	37TB6	3	TERMINAL BOARD	81349	3	PAOZZ	
13−124	3TB1 *	38TB5B	3	TERMINAL BOARD	81349	1	PAOZZ	
13−125	3TB4 3TB7	37TB4	3	TERMINAL BOARD	81349	2	PAOZZ	
				(ATTACHING PARTS)				
		MS51957−34	3	SCREW	96906	24	PAOZZ	
		NAS620C6	3	WASHER	80205	24	PAOZZ	
				− − − − − − − − −				
13−126	3TB2	604JJ−6	3	TERMINAL BOARD (97942) (spec dwg 128C871H25)	83330	1	PAOZZ	
				(ATTACHING PARTS)				
		MS51957−52	3	SCREW	96906	4	PAOZZ	
		MS15795−841	3	WASHER	96906	4	PAOZZ	
				− − − − − − − − −				
13−127	*	MS35842−15	3	CLAMP	96906	2	PAOZZ	
13−128	*	MS35842−16	3	CLAMP	96906	2	PAOZZ	
13−129	3S13	1A20260H05	3	SWITCH, THERMOSTATIC	97942	1	PAOZZ	
				(ATTACHING PARTS)				
		MS51957−14	3	SCREW	96906	2	PAOZZ	
		MS35338−135	3	WASHER	96906	2	PAOZZ	
		MS15795−804	3	WASHER	96906	2	PAOZZ	
		MS35649−244	3	NUT	96906	2	PAOZZ	
				− − − − − − − − −				
13−130	3T1	161C244H01	3	TRANSFORMER, POWER, 3 PHASE (When exhausted replace with 2500012−301)	97942	1	PAOLD	
	3T1	2500012−301	3	TRANSFORMER, POWER, 3 PHASE, MODIFIED (97942) (ALT PN 161C244G01)	0WY55	1	PAOLD	
				(ATTACHING PARTS)				
		AN4C7	3	BOLT	88044	2	PAOZZ	
	NOTE * : NOT SHOWN							

FIGURE AND INDEX NO.	REF DES	PART NUMBER	INDENT	DESCRIPTION	CAGE CODE	QTY PER ASSY	CODES	
								USABLE ON
		MS35338−139	3	WASHER	96906	2	PAOZZ	
		AN960C416	3	WASHER	88044	2	PAOZZ	
				− − − − − − − − −				
13−131	3N3	3D60821G01	3	FUSE BOX ASSEMBLY	97942	1	XB	
				(ATTACHING PARTS)				
		MS90725−6	3	SCREW	96906	6	PAOZZ	
		MS35338−139	3	WASHER	96906	6	PAOZZ	
		AN960C416	3	WASHER	88044	6	PAOZZ	
		A1006−1420	3	NUT, 0.250−20 W/SPRING (97942) (spec dwg 645A836H25)	96195	6	PAOZZ	
				− − − − − − − − −				
13−132	3N3F4 THRU 3N3F6	F03A125V20A	4	FUSE	81349	3	PAOZZ	
13−133	3N3F7 THRU 3N3F9	F03B125V12A	4	FUSE	81349	3	PAOZZ	
13−134	3N3F10 THRU 3N3F12	F03A250V8A	4	FUSE	81349	3	PAOZZ	
13−135	3N3F13	F03A250V5A	4	FUSE	81349	1	PAOZZ	
13−136	3N3XF4 THRU 3N3XF14	FHL17G1	4	FUSEHOLDER	81349	10	PAOZZ	
13−137	3N3K1	MS24168A3	4	RELAY	96906	1	PAOZZ	
13−138	3N3K2	M83536/11−007L	4	RELAY	81349	1	PAOZZ	
13−139	3N3K3 THRU 3N3K7	M83536/9−024M	4	RELAY	81349	5	PAOZZ	
13−140	3N3XK2	M12883/41−07	4	SOCKET	81349	1	PAOZZ	
13−141	3N3XK3 THRU 3N3XK7	M12883/41−06	4	SOCKET	81349	5	PAOZZ	
				(ATTACHING PARTS)				
		AN960C4	4	WASHER	88044	12	PAOZZ	
				− − − − − − − − −				
13−142	3MP10	645A870H03	3	HOSE, FLEX, 5 IN. DIA, 12 IN. LG	97942	1	PAOZZ	
	NOTE * : NOT SHOWN							

FIGURE AND INDEX NO.	REF DES	PART NUMBER	INDENT	DESCRIPTION	CAGE CODE	QTY PER ASSY	CODES	
								USABLE ON
13−143	3MP11	645A870H04	3	HOSE, FLEX, 4 IN. DIA, 24 IN. LG	97942	1	PAOZZ	
13−144	3WG4	124875	3	WAVEGUIDE, RIGID (97942) (spec dwg 156C826H01)	80006	1	PAOZZ	
				(ATTACHING PARTS)				
		MS51958−81	3	SCREW	96906	10	PAOZZ	
		MS35338−139	3	WASHER	96906	10	PAOZZ	
		AN960C416	3	WASHER	88044	10	PAOZZ	
				− − − − − − − − −				
13−145		157C007H01	3	GASKET, NEOPRENE, 10.62″ X 97942 5.12 X 0.063 IN. THK	97942	1	PCOZZ	
13−146		3001298−R	3	SLIDE, DRAWER EXTENSION, RH (97942) (spec dwg 646A061H02)	05236	1	PAOZZ	
13−147		3001298−L	3	SLIDE, DRAWER EXTENSION, LH (97942) (spec dwg 646A061H03)	05236	1	PAOZZ	
13−148	3Z1	3D55738H01	3	CABINET, TRANSMITTER	97942	1	XB	
13−149	3MP4	60−70213	3	FILTER, HONEYCOMB	07700	1	PAOZZ	
13−150	3MP14	60−70219	3	FILTER, HONEYCOMB	07700	1	PAOZZ	
13−151	3MP15	C17203D15	3	FILTER, HONEYCOMB	19178	1	PAOZZ	
13−152	3MP16	C17203D27	3	FILTER, HONEYCOMB	19178	1	PAOZZ	
13−153	3XDS1 * THRU 3XDS5	IW−8	3	LAMP FIXTURE	12084	5	PAOZZ	
13−154	3DS1 * THRU 3DS5	F8T5−CW	4	BULB	08805	5	PAOZZ	
13−155	3J1	WC596/12−4	3	RECEPTACLE, DUPLEX	81348	1	PAOZZ	
13−156	3W1 *	157C240G01	3	CABLE ASSEMBLY	97942	1	PAOOO	
13−157	3W2 *	157C240G02	3	CABLE ASSEMBLY	97942	1	PAOOO	
13−158	3W3 *	157C240G03	3	CABLE ASSEMBLY	97942	1	PAOOO	
13−159	3W4 *	157C240G04	3	CABLE ASSEMBLY	97942	1	PAOOO	
13−160	3W5 *	157C240G22	3	CABLE ASSEMBLY	97942	1	PAOOO	
13−161	3W6 *	157C240G06	3	CABLE ASSEMBLY	97942	1	PAOOO	
13−162	3W7 *	157C240G07	3	CABLE ASSEMBLY	97942	1	PAOOO	
13−163	3W8 *	157C240G08	3	CABLE ASSEMBLY	97942	1	PAOOO	
13−164	3W9 *	159C557G01	3	CABLE ASSEMBLY	97942	1	PAOOO	
13−165	3W10 *	159C557G02	3	CABLE ASSEMBLY	97942	1	PAOOO	
	NOTE * :	NOT SHOWN						

FIGURE AND INDEX NO.	REF DES		PART NUMBER	INDENT	DESCRIPTION	CAGE CODE	QTY PER ASSY	CODES	
									USABLE ON
13−166	3W11	*	159C557G03	3	CABLE ASSEMBLY	97942	1	PAOOO	
13−167	3W14	*	157C240G14	3	CABLE ASSEMBLY	97942	1	PAOOO	
13−168	3W15	*	157C240G15	3	CABLE ASSEMBLY	97942	1	PAOOO	
13−169	3W16	*	157C240G16	3	CABLE ASSEMBLY	97942	1	PAOOO	
13−170	3W17	*	157C240G17	3	CABLE ASSEMBLY	97942	1	PAOOO	
13−171	3W18	*	157C240G18	3	CABLE ASSEMBLY	97942	1	PAOOO	
13−172	3W19	*	157C240G19	3	CABLE ASSEMBLY	97942	1	PAOOO	
13−173	3W20	*	157C240G20	3	CABLE ASSEMBLY	97942	1	PAOOO	
13−174	3W21	*	157C240G21	3	CABLE ASSEMBLY	97942	1	PAOOO	
13−175	3W22	*	127B823G01	3	CABLE, ARC DETECTOR	97942	1	PAOZZ	
13−176	3W101	*	159C596G01	3	CABLE ASSEMBLY, COAX, 50 OHMS	97942	1	PAOZZ	
13−177	3W102	*	157C284G01	3	CABLE ASSEMBLY, COAX, 50 OHMS	97942	1	PAOZZ	
13−178	3W103	*	157C285G01	3	CABLE ASSEMBLY, COAX, 50 OHMS	97942	1	PAOZZ	
13−179	3W104	*	157C286G01	3	CABLE ASSEMBLY, COAX, 50 OHMS	97942	1	PAOZZ	
13−180	3W105	*	159C595G01	3	CABLE ASSEMBLY, COAX, 50 OHMS	97942	1	PAOZZ	
13−181	3AT1	*	M24215/9−001	3	ATTENUATOR	81349	1	PAOZZ	
					(ATTACHING PARTS)				
			MS51957−46	3	SCREW	96906	4	PAOZZ	
			MS35338−134	3	WASHER	96906	4	PAOZZ	
			MS15795−802	3	WASHER	96906	4	PAOZZ	
			MS35649−224	3	NUT	96906	4	PAOZZ	
					− − − − − − − − −				
13−182		*	5121	3	CONNECTOR, CONDUIT (97942) (spec dwg 1A20295H01)	56501	3	PAOZZ	
13−183		*	157C196G02	3	STRAP, GROUND	97942	5	PAOZZ	
13−184	3W900	*	SKMH021996	3	CABLE ASSEMBLY, HIGH VOLTAGE (0WY55) (source ctrl dwg 2210002−201)	52196	1	PAOZZ	
13−185	3W901		SKMH022096	3	CABLE ASSEMBLY, HIGH VOLTAGE (0WY55) (source ctrl dwg 2210002−202)	52196	1	PAOZZ	
13−186	3W902	*	2320004−301	3	CABLE ASSEMBLY	0WY55	1	PAOOO	
	NOTE * :		NOT SHOWN						

FIGURE AND INDEX NO.	REF DES	PART NUMBER	INDENT	DESCRIPTION	CAGE CODE	QTY PER ASSY	CODES	
								USABLE ON
13−187	3/103W904 *	2320010−301	3	CABLE ASSEMBLY (FAA RMS)	0WY55	1	PAOZZ	C
13−188	3/103W905 *	2320011−301	3	CABLE ASSEMBLY (FAA RMS)	0WY55	1	PAOZZ	C
13−189	3MP17 *	2100029−101	3	LATCH, TRANSMITTER CABINET DOOR	0WY55	12	PAOZZ	

USABLE ON CODES

A − LIMITED PRODUCTION

B − FULL SCALE PRODUCTION

C − FAA RMS

NOTE * : NOT SHOWN

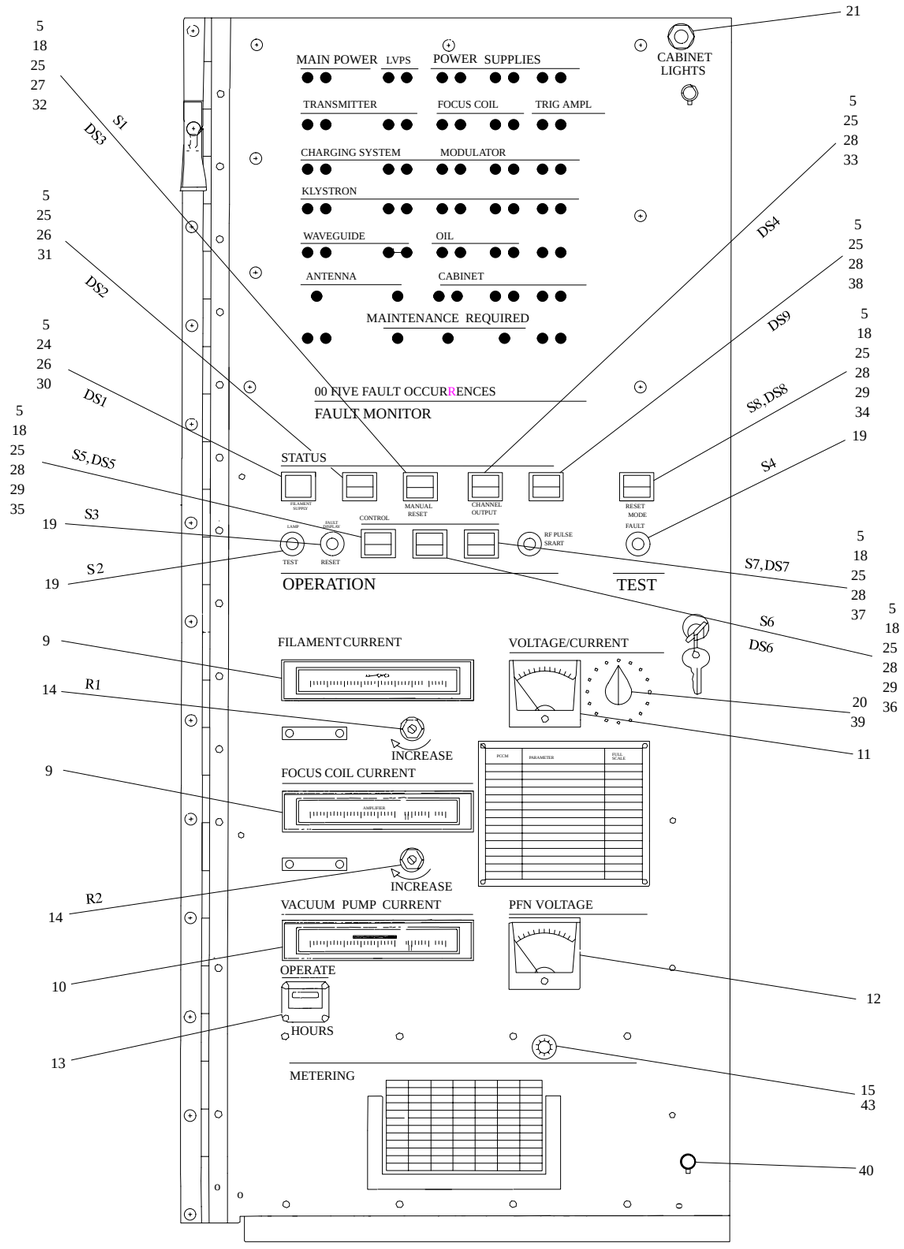

NX1141

FRONT VIEW

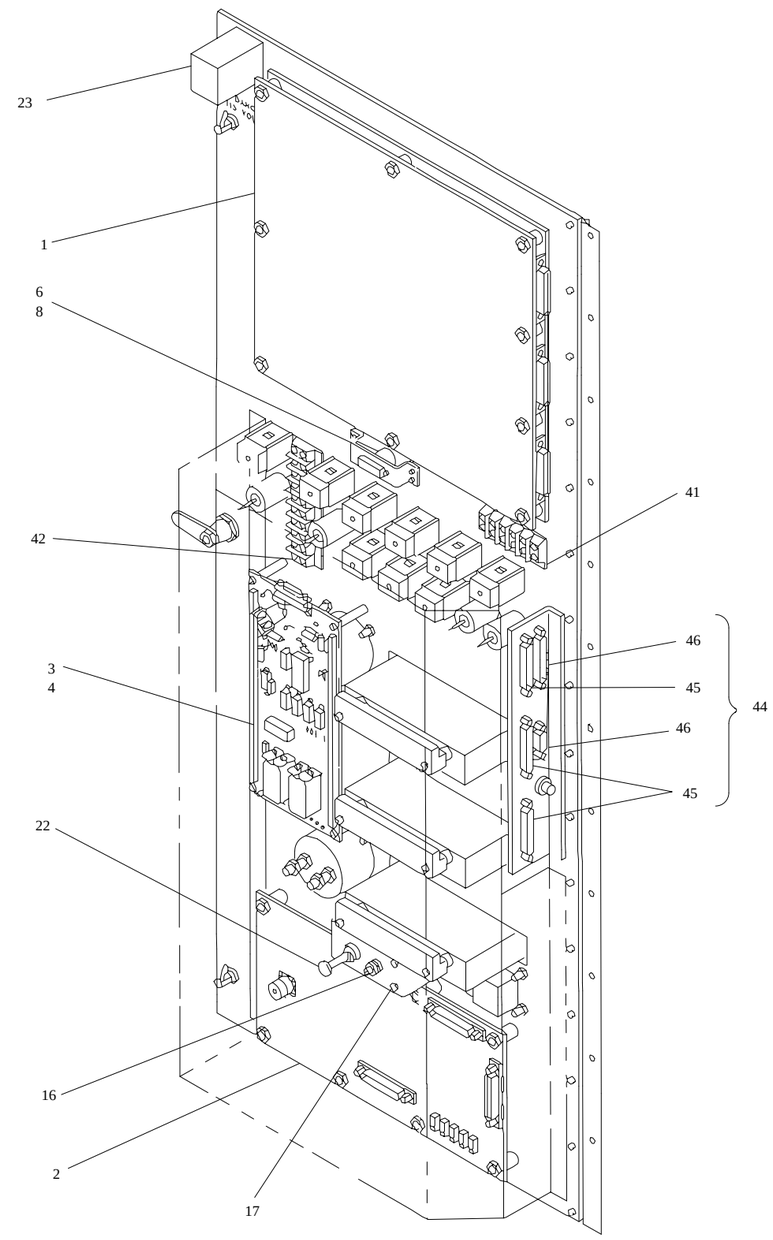

REAR VIEW

FIGURE 14. Control Panel, UD3A1

FIGURE AND INDEX NO.	REF DES	PART NUMBER	INDENT	DESCRIPTION	CAGE CODE	QTY PER ASSY	CODES SMR	CODES USABLE ON
14−	3A1	1D20992G01	1	CONTROL PANEL (For NHA see FIGURE 13 on Page 2 − 123)	97942	REF	PAODD	
14−1	3A1A1	1D21304G01	2	PRINTED WIRING ASSEMBLY, TRANSMITTER FAULT DISPLAY	97942	1	PAOLD	
				(ATTACHING PARTS)				
		MS51958−68	2	SCREW	96906	9	PAOZZ	
		MS35338−138	2	WASHER	96906	9	PAOZZ	
		AN960C10	2	WASHER	88044	9	PAOZZ	
		MS35650−304	2	NUT	96906	9	PAOZZ	
		NAS43DD3−32N	2	SPACER	80205	9	PAOZZ	
				− − − − − − − − −				
14−2	3A1A2	1D21525G02	2	CIRCUIT CARD ASSEMBLY, METERING INTERFACE	97942	1	PAOLD	
				(ATTACHING PARTS)				
		MS51957−30	2	SCREW	96906	8	PAOZZ	
		MS35338−136	2	WASHER	96906	8	PAOZZ	
		MS15795−806	2	WASHER	96906	8	PAOZZ	
		NAS1831A4C16	2	POST	80205	8	PAOZZ	
				− − − − − − − − −				
14−3	3A1A3	1D27655G01	2	CIRCUIT CARD ASSEMBLY, PROPORTIONAL PREHEAT	97942	1	PAOLD	
				(ATTACHING PARTS)				
		MS51957−46	2	SCREW	96906	8	PAOZZ	
		MS35338−137	2	WASHER	96906	8	PAOZZ	
		MS15795−841	2	WASHER	96906	8	PAOZZ	
		NAS1831A5D48	2	POST	80205	8	PAOZZ	
				− − − − − − − − −				
14−4	3A1A3BT1 3A1A3BT2	CH22	3	BATTERY, 7.2V, NICKEL−CADMIUM (97942) (spec dwg 1A20785H01)	83740	2	PCOZZ	
14−5	3A1DS1 THRU 3A1DS36	M6363/8−6AS15	2	LAMP	81349	36	PAOZZ	
14−6	3A1K1	M83536/11−007L	2	RELAY	81349	1	PAOZZ	
14−7	3A1K1MP1 *	127B913H01	2	RELAY, BRACKET	97942	1	PAOZZ	
14−8	3A1XK1	M12883/41−07S	2	SOCKET	81349	1	PAOZZ	
	NOTE * : NOT SHOWN							

FIGURE AND INDEX NO.	REF DES	PART NUMBER	INDENT	DESCRIPTION	CAGE CODE	QTY PER ASSY	CODES SMR	CODES USABLE ON
14−9	3A1M1 3A1M2	645A718H02	2	INDICATOR, BARGRAPH, CURRENT, 1 MA	97942	2	PAOZZ	
				(ATTACHING PARTS)				
		MS35649−244	2	NUT	96906	4	PAOZZ	
		MS35338−135	2	WASHER	96906	4	PAOZZ	
		MS15795−804	2	WASHER	96906	4	PAOZZ	
				− − − − − − − − −				
14−10	3A1M3	645A718H01	2	INDICATOR, BARGRAPH, CURRENT, 100 µA	97942	1	PAOZZ	
				(ATTACHING PARTS)				
		MS35649−244	2	NUT	96906	2	PAOZZ	
		MS35338−135	2	WASHER	96906	2	PAOZZ	
		MS15795−804	2	WASHER	96906	2	PAOZZ	
				− − − − − − − − −				
14−11	3A1M4	142C816H08	2	METER, ARBITRARY SCALE, 1mA, DC	97942	1	PAOZZ	
				(ATTACHING PARTS)				
		MS35649−244	2	NUT	96906	4	PAOZZ	
		MS35338−135	2	WASHER	96906	4	PAOZZ	
		MS15795−804	2	WASHER	96906	4	PAOZZ	
		MS35338−120	2	WASHER	96906	2	PAOZZ	
				− − − − − − − − −				
14−12	3A1M5	142C816H07	2	METER, ARBITRARY SCALE, 1mA, DC	97942	1	PAOZZ	
				(ATTACHING PARTS)				
		MS35649−244	2	NUT	96906	4	PAOZZ	
		MS35338−135	2	WASHER	96906	4	PAOZZ	
		MS15795−804	2	WASHER	96906	4	PAOZZ	
		MS35338−120	2	WASHER	96906	2	PAOZZ	
				− − − − − − − − −				
14−13	3A1M6	M7793/10−001	2	METER, TIME TOTALIZING	81349	1	PAOZZ	
				(ATTACHING PARTS)				
		MS35649−244	2	NUT	96906	4	PAOZZ	
		MS35338−135	2	WASHER	96906	4	PAOZZ	
		MS15795−809	2	WASHER	96906	4	PAOZZ	
				− − − − − − − − −				
	NOTE * :	NOT SHOWN						

FIGURE AND INDEX NO.	REF DES	PART NUMBER	INDENT	DESCRIPTION	CAGE CODE	QTY PER ASSY	CODES SMR	CODES USABLE ON
14−14	3A1R1 3A1R2	3540S−91−103	2	RESISTOR, VARIABLE, WIREWOUND, 10,000 OHMS PORM 0.25% TOTAL, 2W (97942) (spec dwg 645A823H03)	32997	2	PAOZZ	
14−15	3A1R3	3540S−91−502	2	RESISTOR, VARIABLE, WIREWOUND, 5000 OHMS PORM 0.25% TOTAL, 2W (97942) (spec dwg 645A823H02)	32997	1	PAOZZ	
14−16	3A1R4	RVC6LYA502B	2	RESISTOR, VARIABLE	81349	1	PAOZZ	
14−17	3A1R5	RLR20C4701GS	2	RESISTOR, FIXED	81349	1	PAOZZ	
14−18	3A1S1 3A1S5 THRU 3A1S8	M22885/11−01	2	SWITCH	81349	5	PAOZZ	
14−19	3A1S2 THRU 3A1S4	M8805/99−025	2	SWITCH	81349	3	PAOZZ	
14−20	3A1S9	M3786/36−0901	2	SWITCH	81349	1	PAOZZ	
14−21	3A1S10	MS25089−2FR	2	SWITCH	96906	1	PAOZZ	
14−22	3A1S11	MS27720−27−1E	2	SWITCH	96906	1	PAOZZ	
14−23	3A1VR1	RNC55H1623FS	2	VARISTOR, VOLTAGE DEPENDENT, 1W, 150V	81349	1	PAOZZ	
14−24	3A1XDS1	M22885/10−75	2	SWITCH	81349	1	PAOZZ	
14−25	3A1XDS2 THRU 3A1XDS9	M22885/10−78	2	SWITCH	81349	8	PAOZZ	
14−26		M22885/12−02	2	CAP	81349	8	PAOZZ	
14−27		M22885/12−03	2	CAP	81349	2	PAOZZ	
14−28		M22885/12−04	2	CAP	81349	16	PAOZZ	
14−29		M22885/12−05	2	CAP	81349	10	PAOZZ	
14−30		1D20931H01	2	PLATE, LENS, ON	97942	1	PAOZZ	
14−31		1D20931H02	2	PLATE, LENS, AVAILABLE, PREHEAT	97942	1	PAOZZ	
14−32		1D20931H03	2	PLATE, LENS, FAULT, RECYCLE	97942	1	PAOZZ	
14−33		1D20931H04	2	PLATE, LENS, ANTENNA, LOAD	97942	1	PAOZZ	
14−34		1D20931H05	2	PLATE, LENS, AUTOMATIC, MANUAL	97942	1	PAOZZ	

NOTE * : NOT SHOWN

FIGURE AND INDEX NO.	REF DES	PART NUMBER	INDENT	DESCRIPTION	CAGE CODE	QTY PER ASSY	CODES SMR	CODES USABLE ON
14−35		1D20931H06	2	PLATE, LENS, MAINT, SYSTEM	97942	1	PAOZZ	
14−36		1D20931H07	2	PLATE, LENS, HV, OFF, NO, CONTROL	97942	1	PAOZZ	
14−37		1D20931H08	2	PLATE, LENS, HV, ON, NO, CONTROL	97942	1	PAOZZ	
14−38		1D20931H09	2	PLATE, LENS, WIDE, NARROW	97942	1	PAOZZ	
14−39		MS91528−2F4B	2	KNOB	96906	1	PAOZZ	
14−40	3A1MP1	16−10−411−14	2	LATCH (97942) (spec dwg 1A20683H03)	94222	2	PAOZZ	
14−41	3A1TB1	37TB10	2	TERMINAL BOARD	81349	1	PAOZZ	
				(ATTACHING PARTS)				
		MS51957−35	2	SCREW	96906	4	PAOZZ	
		MS35338−136	2	WASHER	96906	4	PAOZZ	
		NAS620C6	2	WASHER	80205	4	PAOZZ	
		NAS671C6	2	NUT	80205	4	PAOZZ	
				− − − − − − − − −				
14−42	3A1TB2	37TB8	2	TERMINAL BOARD	81349	1	PAOZZ	
				(ATTACHING PARTS)				
		MS51957−32	2	SCREW	96906	4	PAOZZ	
		MS35338−136	2	WASHER	96906	4	PAOZZ	
		NAS620C6	2	WASHER	80205	4	PAOZZ	
		NAS671C6	2	NUT	80205	4	PAOZZ	
				− − − − − − − − −				
14−43		16−1−11	2	DIAL (97942) (spec dwg 645A821H01)	02111	1	PAOZZ	
14−44		1D28364G01	2	WIRING HARNESS	97942	1	XB	
14−45	3A1J1 THRU 3A1J3	M24308/2−356	3	CONNECTOR	81349	3	PAOZZ	
14−46	3A1J4 3A1J5	819−B1800W	3	CONNECTOR (97942) (spec dwg 582R908H01)	94375	2	PAOZZ	
14−47	3A13MP1 *	15749	2	LOCK ASSEMBLY (97942) (selected item dwg 1A20033G01)	10608	1	PAOZZ	
	NOTE * : NOT SHOWN							

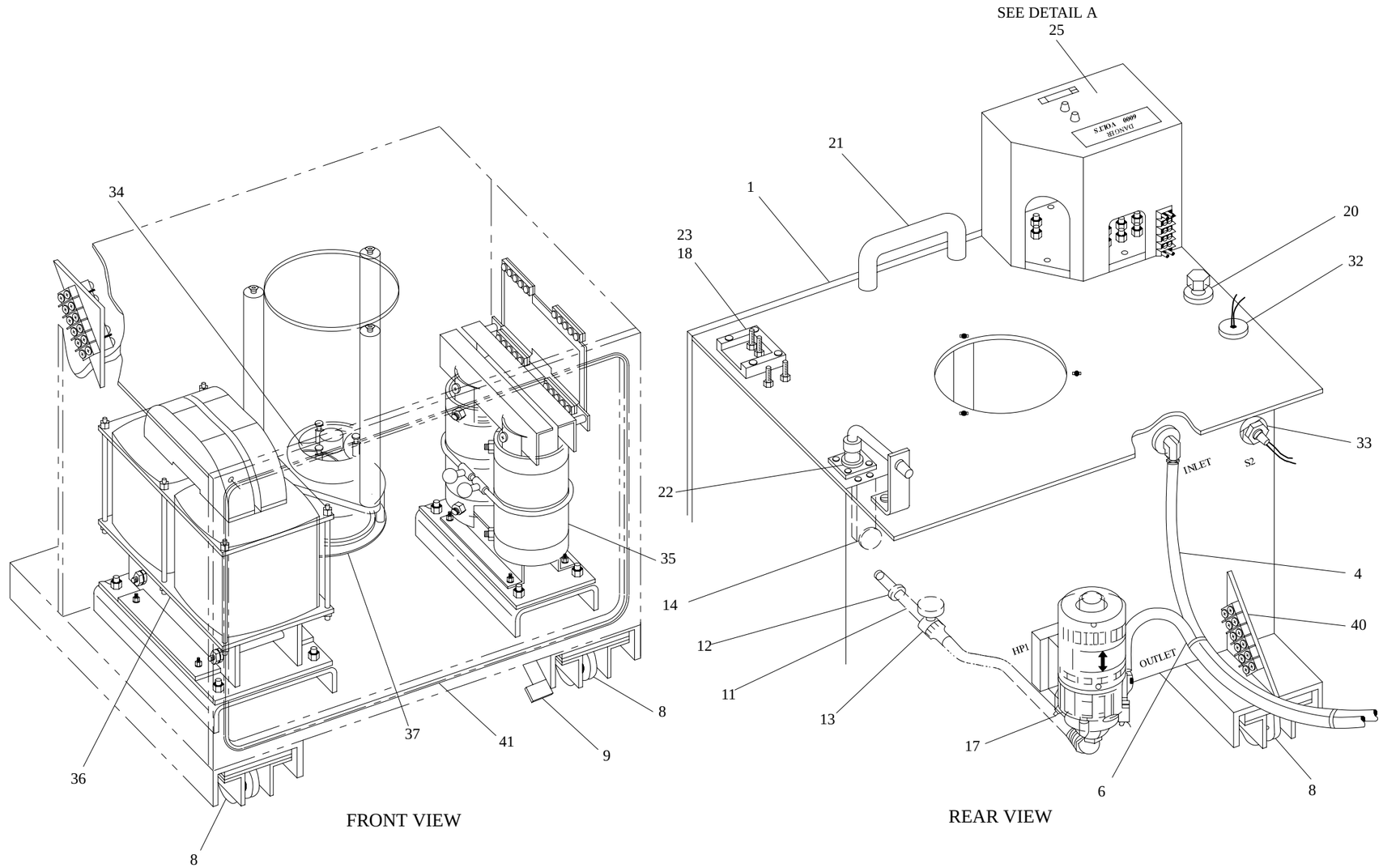

NX1142

FIGURE 15. Oil Tank Assembly, UD3A7 (Sheet 1 of 2)

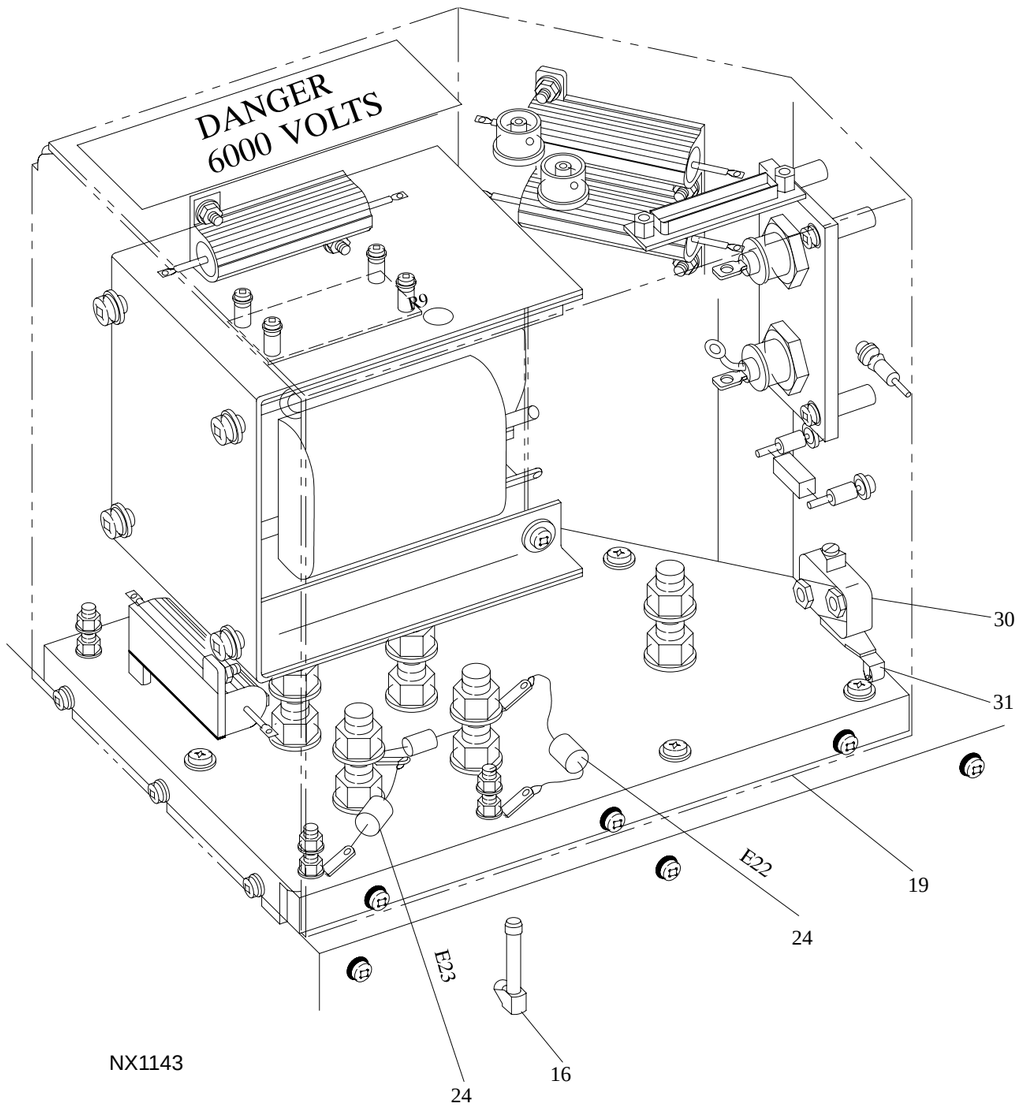

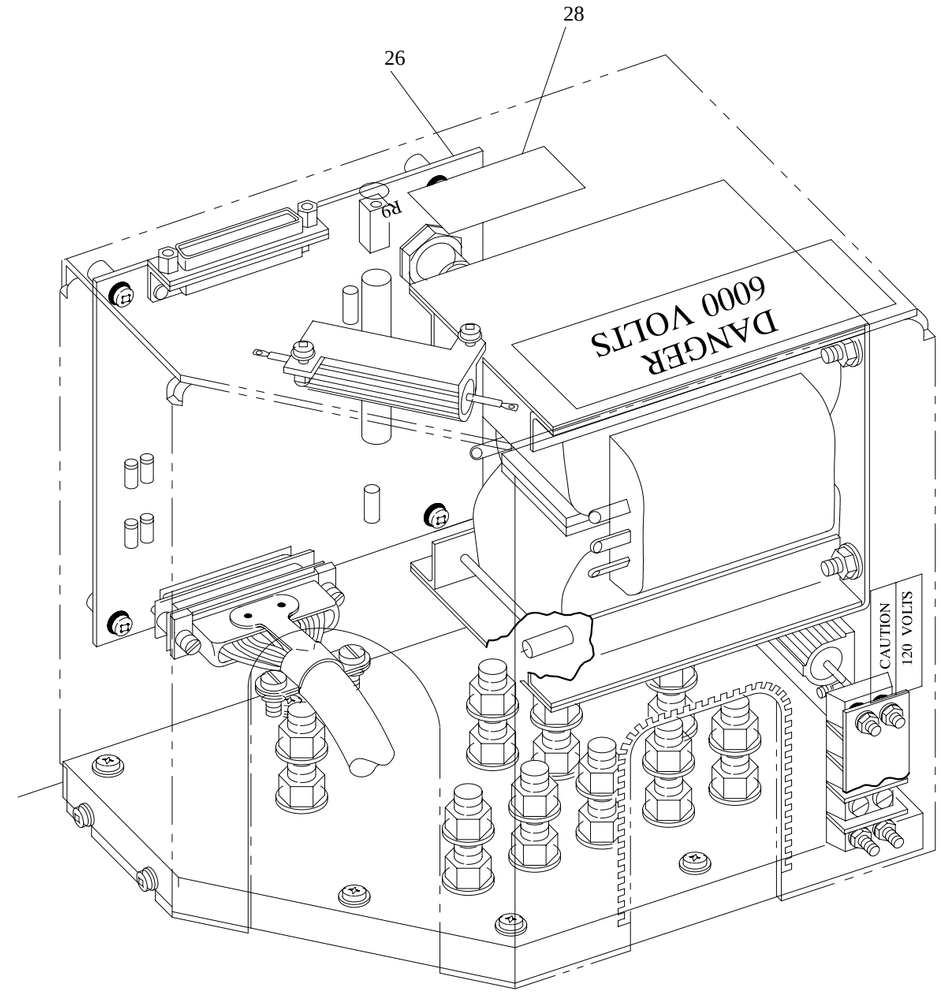

DETAIL A

FIGURE 15. Oil Tank Assembly, UD3A7 (Sheet 2 of 2)

FIGURE AND INDEX NO.	REF DES	PART NUMBER	INDENT	DESCRIPTION	CAGE CODE	QTY PER ASSY	CODES SMR	CODES USABLE ON
15−	3A7	1D20987G01	1	OIL TANK ASSEMBLY (For NHA see FIGURE 13 on Page 2 − 123)	97942	REF	PAODD	
15−1	3A7MP7	3D59476G01	2	TANK	97942	1	PAOLD	
15−2	*	645A799H01	2	CONNECTOR, FEED−THROUGH (HIGH VOLTAGE)	97942	1	PAOZZ	
15−3	*	8FTX−B	2	CONNECTOR PIPE THREAD (01276) (ALT PN 2021−6−8B) (97942) (source ctrl dwg 142C692H07)	09523	1	PAOZZ	
15−4	3A7A2	158C688G02	2	HOSE ASSEMBLY, 49 IN. LG	97942	1	PCOZZ	
15−5	*	4738−6−8B	3	ADAPTER, STRAIGHT PIPE TO HOSE (97942) (spec dwg 331C195H22)	00624	1	PAOZZ	
15−6	3A7A3	158C688G01	2	HOSE ASSEMBLY, 53 IN. LG	97942	1	PCOZZ	
15−7	*	4738−6−8B	3	ADAPTER, STRAIGHT PIPE TO HOSE (97942) (spec dwg 331C195H22)	00624	1	PAOZZ	
15−8	3A7MS2	1D23958G01	2	CASTER AND SUPPORT ASSEMBLY	97942	4	PAOZZ	
				(ATTACHING PARTS)				
		MS24693−C296	2	SCREW	96906	4	PAOZZ	
		MS35338−139	2	WASHER	96906	4	PAOZZ	
		AN960C416	2	WASHER	88044	4	PAOZZ	
		MS35691−7	2	NUT	96906	4	PAOZZ	
				− − − − − − − − −				
15−9	3A7MS1	1D25712G01	2	STOP	97942	1	PCOZZ	
15−10	3A7C01 *	TS−3487	2	OIL, INSULATING, 5 GALLON (54527) (ALT PN SHELL DIALA AX) (97942) (ALT PN 55822AV)	0F2M5	AR	PAOZZ	
15−11		1A20382H01	2	NIPPLE, PIPE	97942	1	PAOZZ	
15−12		B3−K21	2	COUPLING, HALF, QUICK DISCONNECT (97942) (spec dwg 54B6750H11)	73992	1	PAOZZ	
15−13	3A7A4	158C689G01	2	DRAIN ASSEMBLY	97942	1	PAOZZ	
15−14		126B485H01	2	ELECTRODE	97942	1	PAOZZ	
15−15	3A7W1 *	1−839564−8	2	LEAD ASSEMBLY (97942) (spec dwg 645A786H01)	00779	1	PAOZZ	
	NOTE * :	NOT SHOWN						

FIGURE AND INDEX NO.	REF DES	PART NUMBER	INDENT	DESCRIPTION	CAGE CODE	QTY PER ASSY	CODES SMR	CODES USABLE ON
15−16	3A7MS48	G103−1	2	INDICATOR, SIGHT, LIQUID (97942) (spec dwg 646A062H01)	24346	1	PAOZZ	
15−17	3A7HP1	MDXT−3	2	PUMP, OIL (97942) (spec dwg 646A034H01)	21198	1	PAOZZ	
				(ATTACHING PARTS)				
		AN3C5	3	BOLT	88044	4	PAOZZ	
		MS35338−138	3	WASHER	96906	4	PAOZZ	
		MS15795−842	3	WASHER	96906	4	PAOZZ	
				− − − − − − − − −				
15−18	3A7E2	157C103H01	2	TERMINAL, INSULATED, HIGH VOLTAGE	97942	1	PAOZZ	
15−19	3A7MP3	1D20773H01	2	GASKET, NO.1, NEOPRENE, 8″ X 5.75″ X 0.063 IN. THK	97942	1	PCOZZ	
15−20	3A7MP4	M−823NS	2	PLUG, VENT (97942) (spec dwg 645A820H01)	97484	1	PAOZZ	
15−21	3A7MS3	MS39087−4	2	HANDLE	96906	1	PAOZZ	
				(ATTACHING PARTS)				
		MS51958−66	3	SCREW	96906	2	PAOZZ	
		MS35338−138	3	WASHER	96906	2	PAOZZ	
		MS15795−842	3	WASHER	96906	2	PAOZZ	
				− − − − − − − − −				
15−22	3A7MP1	126B439H01	2	GASKET, RUBBER, NO.4, 1.75 X 1.75 X 0.063 IN. THK	97942	1	PCOZZ	
15−23	3A7MP2	156C604H01	2	GASKET, RUBBER, NO.3, 3″ X 2.31″ X 0.022 IN. THK	97942	1	PCOZZ	
15−24	3A7E22 3A7E23	2027−35	2	SPARK GAP, 350VDC (97942) (spec dwg 128C864H02)	4G187	2	PAOZZ	
15−25	3A7A1	3D55606G01	2	INTERFACE ASSEMBLY	97942	1	PAODD	
				(ATTACHING PARTS)				
		MS51957−28	2	SCREW	96906	8	PAOZZ	
		MS51957−35	2	SCREW	96906	6	PAOZZ	
		MS35338−136	2	WASHER	96906	14	PAOZZ	
		MS15795−806	2	WASHER	96906	14	PAOZZ	
				− − − − − − − − −				
15−26	3A7A1A1	1D21464G01	3	PRINTED WIRING ASSEMBLY, OIL TANK COMPONENT	97942	1	PAODD	
	NOTE * :	NOT SHOWN						

FIGURE AND INDEX NO.	REF DES	PART NUMBER	INDENT	DESCRIPTION	CAGE CODE	QTY PER ASSY	CODES SMR	CODES USABLE ON
				(ATTACHING PARTS)				
		MS51957−13	3	SCREW	96906	8	PAOZZ	
		MS35338−135	3	WASHER	96906	8	PAOZZ	
		MS15795−804	3	WASHER	96906	8	PAOZZ	
		NAS1831A3B06	3	POST	80205	4	PAOZZ	
				− − − − − − − − −				
15−27	3A7A1A1CR1 *	JANTX1N1190	3	SEMICONDUCTOR DEVICE	81349	1	PAOZZ	
15−28	3A7A1A2	158C696G01	3	TERMINAL BOARD ASSEMBLY	97942	1	PAOZZ	
				(ATTACHING PARTS)				
		MS51957−17	3	SCREW	96906	4	PAOZZ	
		MS35338−135	3	WASHER	96906	4	PAOZZ	
		MS15795−804	3	WASHER	96906	4	PAOZZ	
		NAS671C4	3	NUT, HEX	80205	4	PAOZZ	
15−29	*	RCR07G563JS	3	RESISTOR	81349	1	PAOZZ	
		580R509H03	3	SPACER, SLEEVE	97942	4	PAOZZ	
				− − − − − − − − −				
15−30	3A7A1S3	M8805/90−002	3	SWITCH	81349	1	PAOZZ	
15−31	3A7A1MP5	54B6831H02	3	ACTUATOR, AUXILIARY	89661	1	PAOZZ	
15−32	3A7S1	142218	2	SWITCH, LIQUID LEVEL, SINGLE STATION, SPST, LOW (97942) (spec dwg 1A20047H01)	04034	1	PAOZZ	
15−33	3A7S2	M24236/25−HHJBA	2	SWITCH, THERMOSTATIC	81349	1	PAOZZ	
15−34	3A7XV1	646A049H01	2	SOCKET, KLYSTRON TUBE	97942	1	PAOZZ	
15−35	3A7T1	156C742A01	2	TRANSFORMER, PULSE (0WY55) (ALT PN 2500022−101) (13058) (ALT PN TP1040)	97942	1	PAOLD	
15−36	3A7T2	7480A01G01	2	CHARGING TRANSFORMER & HOLDING TANK ASSEMBLY	97942	1	PAOLD	
				(ATTACHING PARTS)				
		MS35308−335	3	SCREW	96906	4	PAOZZ	
		MS35338−140	3	WASHER	96906	4	PAOZZ	
		AN960C516	3	WASHER	81352	4	PAOZZ	
				− − − − − − − − −				
15−37	3A7T3	155C818A01	2	TRANSFORMER, FILAMENT	97942	1	PAOLD	
	NOTE * :	NOT SHOWN						

FIGURE AND INDEX NO.	REF DES	PART NUMBER	INDENT	DESCRIPTION	CAGE CODE	QTY PER ASSY	CODES SMR	CODES USABLE ON
				(ATTACHING PARTS)				
		MS18212−71	2	SCREW	96906	4	PAOZZ	
		NAS1515H3	2	WASHER	80205	4	PAOZZ	
		MS51858−5	2	NUT	96906	4	PAOZZ	
		580R509H78	2	SPACER	97942	4	PAOZZ	
				− − − − − − − − −				
15−38	3A7MP6 *	TBJC	2	BUS, CONNECTOR	81349	1	PAOZZ	
15−39	*	156C622H03	2	SHIELD	97942	1	PAOZZ	
				(ATTACHING PARTS)				
		MS51957−51	2	SCREW	96906	2	PAOZZ	
		MS35338−137	2	WASHER	96906	2	PAOZZ	
		MS15795−841	2	WASHER	96906	2	PAOZZ	
		NAS43DD3−20FC	2	SPACER	80205	2	PAOZZ	
		MS35649−284	2	NUT	96906	2	PAOZZ	
				− − − − − − − − −				
15−40	3A7TB1 3A7TB2 3A7TB4	39TB4	2	TERMINAL BOARD	81349	3	PAOZZ	
				(ATTACHING PARTS)				
		MS51957−50	2	SCREW	96906	2	PAOZZ	
		MS35338−137	2	WASHER	96906	2	PAOZZ	
		MS15795−841	2	WASHER	96906	2	PAOZZ	
		MS35649−284	2	NUT	96906	2	PAOZZ	
				− − − − − − − − −				
15−41	3A7MP8	M83248/1−473	2	GASKET, FRONT COVER	81349	1	PCOZZ	
	NOTE * :	NOT SHOWN						

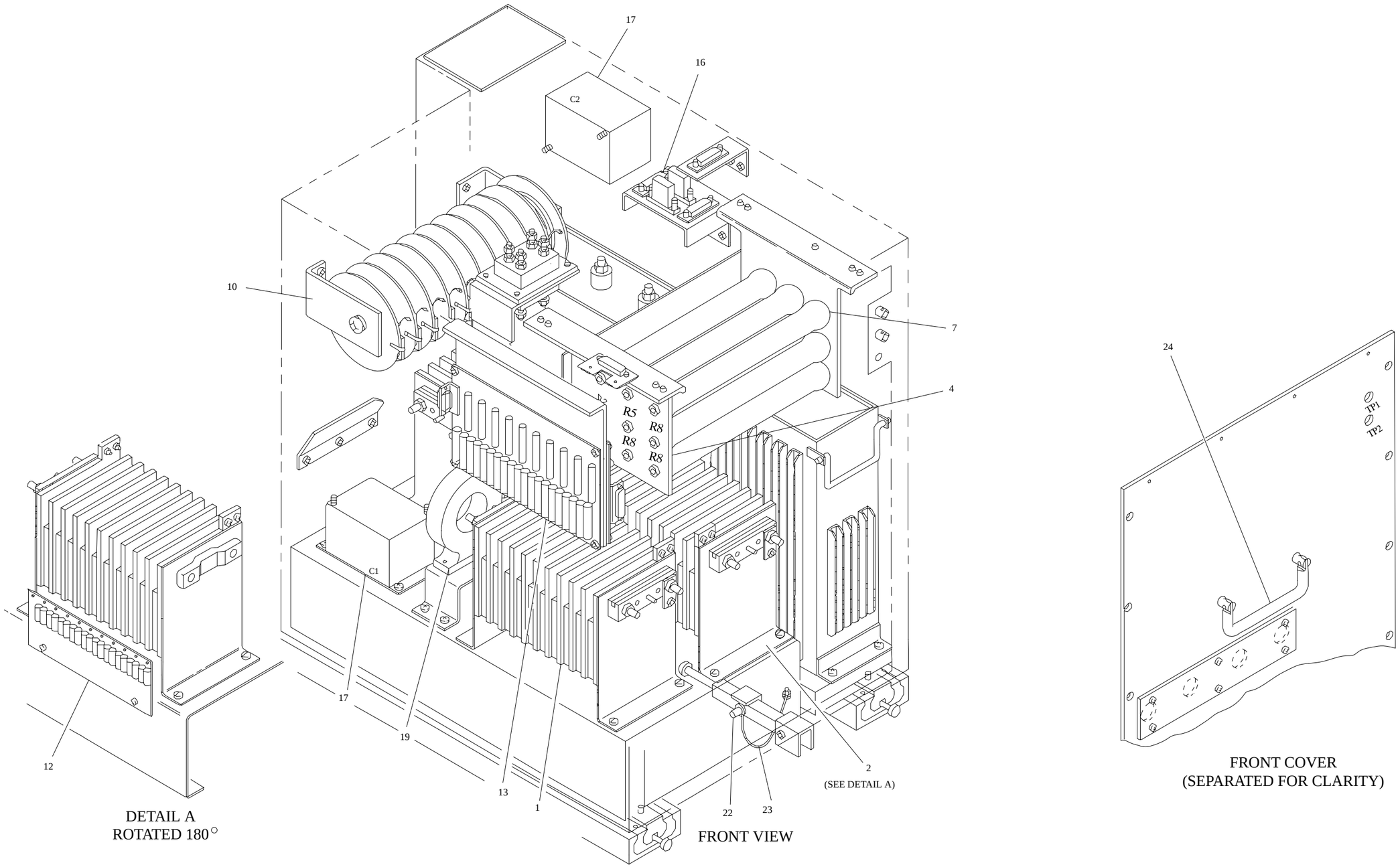

FIGURE 16. Modulator Pulse Assembly, UD3A12 (Sheet 1 of 5)

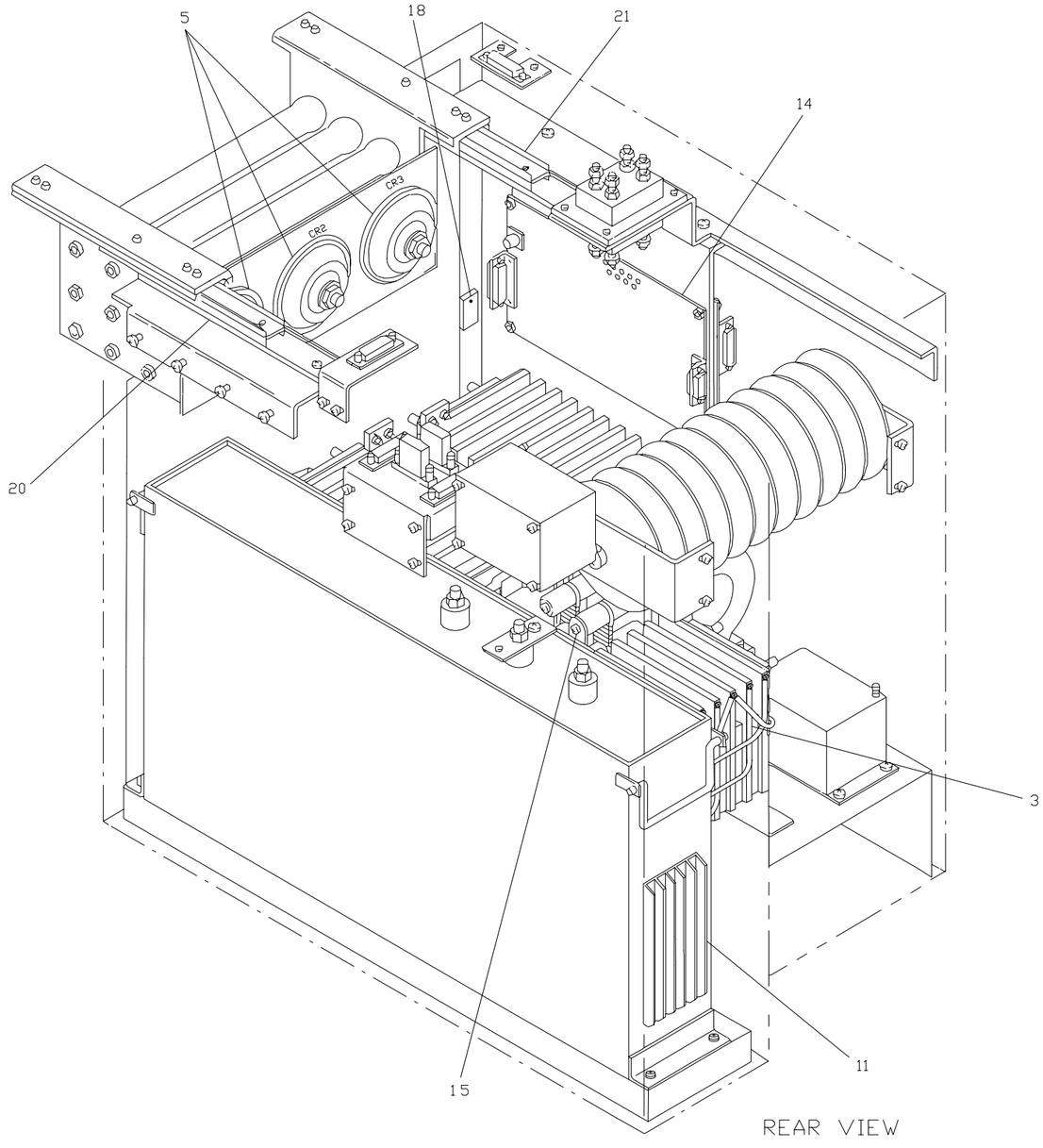

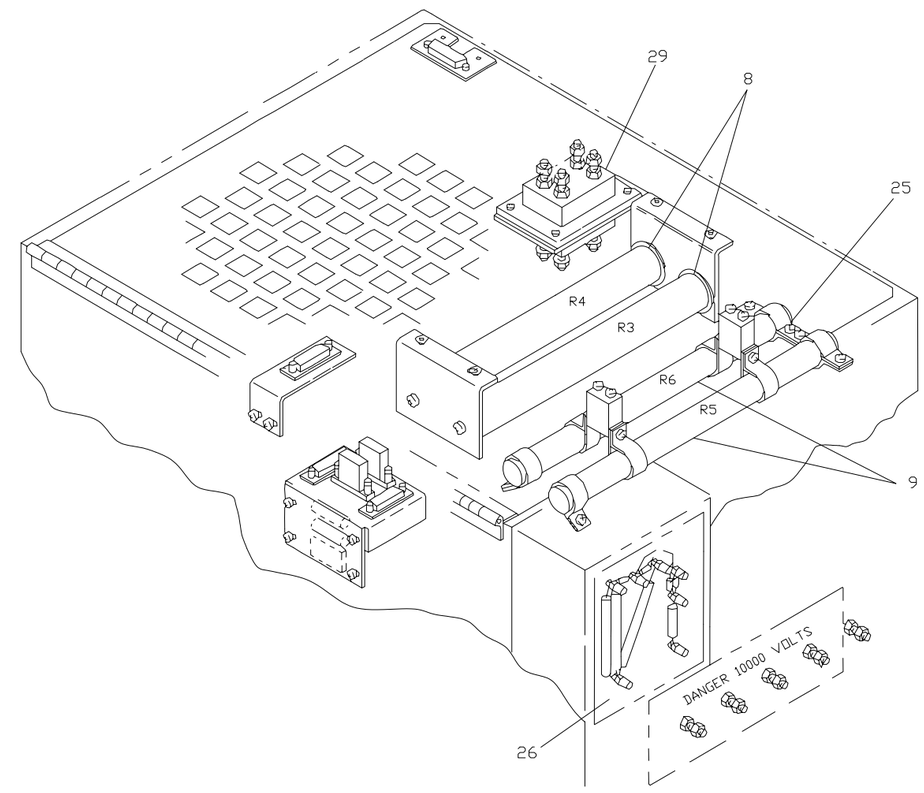

NX1145

FIGURE 16. Modulator Pulse Assembly, UD3A12 (Sheet 2 of 5)

CABLE ASSEMBLIES (NOT SHOWN)

INDEX NO.	REF DES	FROM	TO	USABLE ON CODE
16−36	3A12W2	W2P1	W2P2	
16−37	3A12W1	W1P1 PIN 9	W1P2 PIN 7	
		W1P1 PIN 1	W1P2 PIN 8	
		W1P1 PIN 2	W1P2 PIN 15	
		W1P1 PIN 3	W1P2 PIN 14	
		W1P1 PIN 15	W1P2 PIN 2	
		W1P1 PIN 8	W1P2 PIN 9	
		W1P1 PIN 7	W1P2 PIN 3	
		W1P1 PIN 6	W1P2 PIN 6	
		W1P1 PIN 5	W1P2 PIN 1	
		W1P1 PIN 4	W1P2 PIN 10	
		W1P2 PIN 12	W1P2 PIN 12	
16−38	3A12W3	J3 PIN 11	W3P1 PIN 11	
		J3 PIN 24	W3P1 PIN 24	
		J3 PIN 6	W3P1 PIN 6	
		J3 PIN 19	W3P1 PIN 19	
		J3 PIN 1	W3P1 PIN 1	
		J3 PIN 14	W3P1 PIN 14	
		J3 PIN 15	W3P1 PIN 15	
		J3 PIN 2	W3P1 PIN 2	
		J3 PIN 3	W3P1 PIN 3	
		J3 PIN 16	W3P1 PIN 16	
		J3 PIN 8	W3P1 PIN 8	
		J3 PIN 21	W3P1 PIN 21	
		J3 PIN 20	W3P1 PIN 20	
		J3 PIN 7	W3P1 PIN 7	
		J3 PIN 17	W3P1 PIN 17	
		J3 PIN 4	W3P1 PIN 4	
		J3 PIN 12	W3P1 PIN 12	
		J3 PIN 25	W3P1 PIN 25	
		J3 PIN 10	W3P1 PIN 10	
		J3 PIN 23	W3P1 PIN 23	
		J3 PIN 13	W3P1 PIN 13	
		J3	A9J2	
		J3 PIN 5	E14	
		J3 PIN 18	E13	

* SITE DEPENDENT

FIGURE 16. Modulator Pulse Assembly (Sheet 3 of 5)

CABLE ASSEMBLIES (NOT SHOWN)

INDEX NO.	REF DES	FROM	TO	USABLE ON CODE
16−38 (cont.)		J3 PIN 9	S1	
		J3 PIN 22	S1	
16−39	3A12W4	W4P1 PIN TP1		
16−40	3A12W5	W5P1 PIN TP2		
16−41	3A12W6	W6P1 PIN 2	W6P2 PIN 2	
		W6P1 PIN 7	W6P2 PIN 7	
		W6P1 PIN 4	W6P2 PIN 4	
		W6P1 PIN 9	W6P2 PIN 9	
		W6P1 PIN A1	W6P2 PIN A1	
		W6P1 PIN A2	W6P2 PIN A2	
		W6P1 PIN A3	W6P2 PIN A3	
		A10J1	A11J2	
16−42	3A12W7	J2 PIN 6	W7P1 PIN 6	
		J2 PIN 1	W7P1 PIN 1	
		J2 PIN 7	W7P1 PIN 7	
		J2 PIN 2	W7P1 PIN 2	
		J2 PIN 8	W7P1 PIN 8	
		J2 PIN 3	W7P1 PIN 3	
		J2 PIN 9	W7P1 PIN 9	
		J2 PIN 4	W7P1 PIN 4	
		J2 PIN A2	W7P1 PIN A2	
		J2 PIN A3	W7P1 PIN A3	
		J2	A11J1	
16−43	3A12W902	A5E1	E1	
16−44	3A12W903	E19	A9E1	
16−45	3A12W904	R4 PIN A	E7 PIN A	
16−46	3A12W905	C2E2	R3 PIN A	
16−47	3A12W906	A4E4	E8 PIN B	
16−48	3A12W907	A4E2	E7 PIN B	
16−49	3A12W908	A10 PIN B	A6 PIN NRW	
		A10 PIN B	A6 PIN NRW	
16−50	3A12W909	A10 PIN C	A6 PIN WIDE	
		A10 PIN C	A6 PIN WIDE	
16−51	3A12W910	E16	A5E2	
16−52	3A12W911	E18	E2	
16−53	3A12W912	E15	E7 PIN A	

* SITE DEPENDENT

FIGURE 16. Modulator Pulse Assembly (Sheet 4 of 5)

CABLE ASSEMBLIES (NOT SHOWN)

INDEX NO.	REF DES	FROM	TO	USABLE ON CODE
16−54	3A12W913	E15	E7 PIN B	
16−55	3A12W914	E3	R5 PIN A	
16−56	3A12W915	E4	E20	
16−57	3A12W916	R6 PIN A	C1E1	
16−58	3A12W917	C1E2	A1E2	
16−59	3A12W918	E17 PIN B	E8 PIN A	
16−60	3A12W919	E17 PIN B	E8 PIN B	
16−61	3A12W923	E1	C2E1	

* SITE DEPENDENT

FIGURE 16. Modulator Pulse Assembly (Sheet 5 of 5)

FIGURE AND INDEX NO.	REF DES	PART NUMBER	INDENT	DESCRIPTION	CAGE CODE	QTY PER ASSY	CODES SMR	CODES USABLE ON
16−	3A12	612J408G01	1	MODULATOR PULSE ASSEMBLY (For NHA see FIGURE 13 on Page 2 − 123) (When exhausted replace with (0WY55) (PN 2500006−301))	97942	REF	PAODD	
	3A12	2500006−301	1	MODULATOR PULSE ASSEMBLY, HIGH RELIABILITY (For NHA see FIGURE 13 on Page 2 − 123)	0WY55	REF	PAODD	
16−1	3A12A1	3D55852G01	2	SWITCH ASSEMBLY, RBDT	97942	1	PAOLD	
				(ATTACHING PARTS)				
		MS51957−46	2	SCREW	96906	2	PAOZZ	
		MS35338−137	2	WASHER	96906	2	PAOZZ	
		MS15795−841	2	WASHER	96906	2	PAOZZ	
		155C984H01	2	SCREW, SHOULDER, 164−32 X 0.263 IN. LG	97942	2	PAOZZ	
				− − − − − − − − −				
16−2	3A12A2	3D55853G01	2	TRIGGER BLOCKING DIODE STACK ASSEMBLY	97942	1	PAOLD	
				(ATTACHING PARTS)				
		MS51957−46	2	SCREW	96906	2	PAOZZ	
		MS35338−137	2	WASHER	96906	2	PAOZZ	
		MS15795−841	2	WASHER	96906	2	PAOZZ	
		155C984H01	2	SCREW, SHOULDER, 164−32 X 0.263 IN. LG	97942	2	PAOZZ	
				− − − − − − − − −				
16−3	3A12A3	2500007−301	2	BACKSWING DIODE STACK ASSEMBLY (Replaces (97942) (PN 3D55747G01))	0WY55	1	PAOLD	
16−4	3A12A4	3D55730G01	2	RESISTOR, DIODE ASSEMBLY	97942	1	PAOLD	
				(ATTACHING PARTS)				
		MS51957−30	2	SCREW	96906	10	PAOZZ	
		MS35338−136	2	WASHER	96906	10	PAOZZ	
		MS15795−806	2	WASHER	96906	10	PAOZZ	
		MS35649−264	2	NUT	96906	10	PAOZZ	
				− − − − − − − − −				
16−5	3A12A4CR1 THRU 3A12A4CR3	JANTX1N5603	3	SEMICONDUCTOR DEVICE	81349	3	PADZZ	
	NOTE * :	NOT SHOWN						

FIGURE AND INDEX NO.	REF DES	PART NUMBER	INDENT	DESCRIPTION	CAGE CODE	QTY PER ASSY	CODES SMR	CODES USABLE ON
				(ATTACHING PARTS)				
		MS51958−107	3	SCREW	96906	3	PAOZZ	
		NAS1149C0663R	3	WASHER	80205	6	PAOZZ	
				− − − − − − − − −				
16−6	3A12A4E1 * THRU 3A12A4E4	127B958H03	3	STUD, HEX	97942	4	PAOZZ	
16−7	3A12A4R1 THRU 3A12A4R9	RW47V101	3	RESISTOR	81349	9	PADZZ	
				(ATTACHING PARTS)				
		MS35650−304	3	NUT	96906	18	PAOZZ	
		MS35338−138	3	WASHER	96906	18	PAOZZ	
		MS15795−842	3	WASHER	96906	18	PAOZZ	
				− − − − − − − − −				
16−8	3A12R3 3A12R4	RW47V122	2	RESISTOR	81349	2	PAOZZ	
16−9	3A12R5 3A12R6	138C507H04	2	RESISTOR, FIXED, CARBON COMP, NON−INDUCT, HIGH PWR, 30 OHMS PORM 10%	97942	2	PAOZZ	
16−10	3A12A5	3D55729G01	2	DIODE ASSEMBLY	97942	1	PAOLD	
				(ATTACHING PARTS)				
		MS51958−65	2	SCREW	96906	4	PAOZZ	
		MS35338−138	2	WASHER	96906	4	PAOZZ	
		MS15795−842	2	WASHER	96906	4	PAOZZ	
		MS35650−304	2	NUT	96906	4	PAOZZ	
				− − − − − − − − −				
16−11	3A12A6	1D20989H01	2	DUAL PULSE FORMING NETWORK	97942	1	PAOLD	
				(ATTACHING PARTS)				
		MS51957−82	2	SCREW	96906	4	PAOZZ	
		MS35338−139	2	WASHER	96906	4	PAOZZ	
		AN960C416	2	WASHER	88044	4	PAOZZ	
				− − − − − − − − −				
16−12	3A12A7	1D21500G01	2	BOARD ASSEMBLY, TRIGGER LOADING	97942	1	PAOZZ	
				(ATTACHING PARTS)				
		MS51957−31	2	SCREW	96906	2	PAOZZ	
	NOTE * :	NOT SHOWN						

FIGURE AND INDEX NO.	REF DES	PART NUMBER	INDENT	DESCRIPTION	CAGE CODE	QTY PER ASSY	CODES SMR	CODES USABLE ON
		MS35338−136	2	WASHER	96906	2	PAOZZ	
		MS15795−806	2	WASHER	96906	2	PAOZZ	
				− − − − − − − − −				
16−13	3A12A8	1D21168G01	2	PRINTED WIRING ASSEMBLY, VOLTAGE EQUALIZATION	97942	1	PAOLD	
16−14	3A12A9	3D60349G01	2	STACK MONITOR	97942	1	PAOLD	
				(ATTACHING PARTS)				
		MS51858−3	2	NUT	96906	16	PAOZZ	
		NAS1515H06	2	WASHER	80205	8	PAOZZ	
				− − − − − − − − −				
16−15	3A12A10	E−15−DTL−10−2C−O−DX	2	SWITCH, LATCHING, HV (97942) (source ctrl dwg 1D20988H01)	23598	1	PAOLD	
				(ATTACHING PARTS)				
		MS51958−66	2	SCREW	96906	4	PAOZZ	
		MS35338−138	2	WASHER	96906	4	PAOZZ	
		MS15795−842	2	WASHER	96906	4	PAOZZ	
				− − − − − − − − −				
16−16	3A12A11	3D55707G01	2	SWITCH INTERFACE ASSEMBLY, PULSE FORMING NETWORK	97942	1	PAODD	
				(ATTACHING PARTS)				
		MS51957−31	2	SCREW	96906	4	PAOZZ	
		MS35338−136	2	WASHER	96906	4	PAOZZ	
		MS15795−806	2	WASHER	96906	4	PAOZZ	
				− − − − − − − − −				
16−17	3A12C1 3A12C2	221M964	2	CAPACITOR, FIXED, MICA (97942) (selected item dwg 645A702H03)	60705	2	PAOZZ	
				(ATTACHING PARTS)				
		MS51957−44	2	SCREW	96906	4	PAOZZ	
		MS35338−137	2	WASHER	96906	4	PAOZZ	
		MS15795−841	2	WASHER	96906	4	PAOZZ	
		MS24693−C47	2	SCREW	96906	4	PAOZZ	
				− − − − − − − − −				
16−18	3A12S1	MS16106−1	2	SWITCH, INTERLOCK	96906	1	PAOZZ	
	NOTE * :	NOT SHOWN						

FIGURE AND INDEX NO.	REF DES	PART NUMBER	INDENT	DESCRIPTION	CAGE CODE	QTY PER ASSY	CODES SMR	CODES USABLE ON
				(ATTACHING PARTS)				
		MS24693−C25	2	SCREW	96906	2	PAOZZ	
				− − − − − − − − −				
16−19	3A12T1	110	2	TRANSFORMER, CURRENT (97942) (spec dwg 590R531H04)	05280	1	PAOZZ	
				(ATTACHING PARTS)				
		MS51957−49	2	SCREW	96906	2	PAOZZ	
		MS35338−137	2	WASHER	96906	2	PAOZZ	
		MS15795−841	2	WASHER	96906	2	PAOZZ	
		MS35649−284	2	NUT	96906	2	PAOZZ	
				− − − − − − − − −				
16−20	3A12MP3	M−301−9−LJ	2	SLIDE, DRAWER EXTENSION, LEFT HAND (97942) (selected item dwg 1A20787H02)	16499	1	PAOZZ	
16−21	3A12MP5	M−301−9−LO	2	SLIDE, DRAWER EXTENSION, RIGHT HAND (97942) (selected item dwg 1A20787H01)	16499	1	PAOZZ	
				(ATTACHING PARTS)				
		MS51957−30	2	SCREW	96906	8	PAOZZ	
		MS35338−136	2	WASHER	96906	8	PAOZZ	
		MS15795−806	2	WASHER	96906	8	PAOZZ	
		MS35649−264	2	NUT	96906	8	PAOZZ	
				− − − − − − − − −				
16−22		MS17984C310	2	PIN, QUICK RELEASE	96906	1	PAOZZ	
16−23		128C702BA070000	2	LANYARD	97942	1	PAOZZ	
16−24	3A12MP6	582R209H23	2	HANDLE, FOLDING	97942	1	PAOZZ	
				(ATTACHING PARTS)				
		MS35691−23	2	NUT	96906	2	PAOZZ	
		MS35338−141	2	WASHER	96906	2	PAOZZ	
		NAS1149C0663R	2	WASHER	80205	2	PAOZZ	
				− − − − − − − − −				
16−25	3A12W15	159C564H01	2	BUS RESISTOR	97942	1	PAOZZ	
				(ATTACHING PARTS)				
		MS51957−30	2	SCREW	96906	4	PAOZZ	
		MS35338−138	2	WASHER	96906	4	PAOZZ	
	NOTE * :	NOT SHOWN						

FIGURE AND INDEX NO.	REF DES	PART NUMBER	INDENT	DESCRIPTION	CAGE CODE	QTY PER ASSY	CODES SMR	CODES USABLE ON
		MS15795−806	2	WASHER	96906	4	PAOZZ	
		MS35649−264	2	NUT	96906	4	PAOZZ	
				− − − − − − − − −				
16−26	3A12A12	159C561G01	2	RESISTOR BOARD ASSEMBLY	97942	1	PAOZZ	
				(ATTACHING PARTS)				
		MS51957−32	2	SCREW	96906	6	PAOZZ	
		MS15795−806	2	WASHER	96906	6	PAOZZ	
		MS35649−264	2	NUT	96906	6	PAOZZ	
				− − − − − − − − −				
16−27	3A12MS91 *	154C499H01	2	CLAMP	97942	4	PAOZZ	
16−28	3A12MS87 *	159C554H01	2	CLAMP	97942	2	PAOZZ	
16−29	3A12TB1	159C545G01	2	FEED THROUGH, HIGH VOLTAGE	97942	1	PAOOO	
16−30	3A12TB1E7 *	127B958H01	3	STUD, HEX	97942	4	PAOZZ	
16−31	*	127B927H01	2	SPACER, TEFLON	97942	1	PAOZZ	
16−32	3A12MS126 *	127B956G01	2	SUPPORT, CABLE	97942	4	PAOZZ	
16−33	3A12MS50 *	159C544H01	2	PLATE, TERMINAL	97942	1	PAOZZ	
16−34	3A12MS50E1 * THRU 3A12MS50E4	127B958H02	3	STUD, HEX	97942	4	PAOZZ	
16−35	3A12E10 *	127B958H02	2	STUD, HEX	97942	1	PAOZZ	
16−36	3A12W2 *	1A24988−W2	2	CABLE, 3A12W2, MPA	0WY55	1	PAOZZ	
16−37	3A12W1 *	1A24988−W1	2	CABLE, 3A12W1, MPA	0WY55	1	PAOZZ	
16−38	3A12W3 *	1A24988−W3	2	CABLE, 3A12W3, MPA	0WY55	1	PADZZ	
16−39	3A12W4 *	1A24988−W4	2	CABLE, 3A12W4, MPA	0WY55	1	PADZZ	
16−40	3A12W5 *	1A24988−W5	2	CABLE, 3A12W5, MPA	0WY55	1	PADZZ	
16−41	3A12W6 *	1A24988−W6	2	CABLE, 3A12W6, MPA	0WY55	1	PAOZZ	
16−42	3A12W7 *	1A24988−W7	2	CABLE, 3A12W7, MPA	0WY55	1	PAOZZ	
16−43	3A12W902 *	1A24988−W902	2	CABLE, 3A12W902, MPA	0WY55	1	PAOZZ	
16−44	3A12W903 *	1A24988−W903	2	CABLE, 3A12W903, MPA	0WY55	1	PAOZZ	
16−45	3A12W904 *	1A24988−W904	2	CABLE, 3A12W904, MPA	0WY55	1	PADZZ	
16−46	3A12W905 *	1A24988−W905	2	CABLE, 3A12W905, MPA	0WY55	1	PAOZZ	
16−47	3A12W906 *	1A24988−W906	2	CABLE, 3A12W906, MPA	0WY55	1	PAOZZ	
16−48	3A12W907 *	1A24988−W907	2	CABLE, 3A12W907, MPA	0WY55	1	PAOZZ	
	NOTE * :	NOT SHOWN						

Section II. Maintenance Parts List

FIGURE AND INDEX NO.	REF DES	PART NUMBER	INDENT	DESCRIPTION	CAGE CODE	QTY PER ASSY	CODES SMR	CODES USABLE ON
16−49	3A12W908 *	1A24988−W908	2	CABLE, 3A12W908, MPA	0WY55	1	PAOZZ	
16−50	3A12W909 *	1A24988−W909	2	CABLE, 3A12W909, MPA	0WY55	1	PAOZZ	
16−51	3A12W910 *	1A24988−W910	2	CABLE, 3A12W910, MPA	0WY55	1	PAOZZ	
16−52	3A12W911 *	1A24988−W911	2	CABLE, 3A12W911, MPA	0WY55	1	PAOZZ	
16−53	3A12W912 *	1A24988−W912	2	CABLE, 3A12W912, MPA	0WY55	1	PAOZZ	
16−54	3A12W913 *	1A24988−W913	2	CABLE, 3A12W913, MPA	0WY55	1	PAOZZ	
16−55	3A12W914 *	1A24988−W914	2	CABLE, 3A12W914, MPA	0WY55	1	PAOZZ	
16−56	3A12W915 *	1A24988−W915	2	CABLE, 3A12W915, MPA	0WY55	1	PAOZZ	
16−57	3A12W916 *	1A24988−W916	2	CABLE, 3A12W916, MPA	0WY55	1	PAOZZ	
16−58	3A12W917 *	1A24988−W917	2	CABLE, 3A12W917, MPA	0WY55	1	PAOZZ	
16−59	3A12W918 *	1A24988−W918	2	CABLE, 3A12W918, MPA	0WY55	1	PAOZZ	
16−60	3A12W919 *	1A24988−W919	2	CABLE, 3A12W919, MPA	0WY55	1	PAOZZ	
16−61	3A12W923 *	1A24988−W923	2	CABLE, 3A12W923, MPA	0WY55	1	PAOZZ	
	NOTE * : NOT SHOWN							

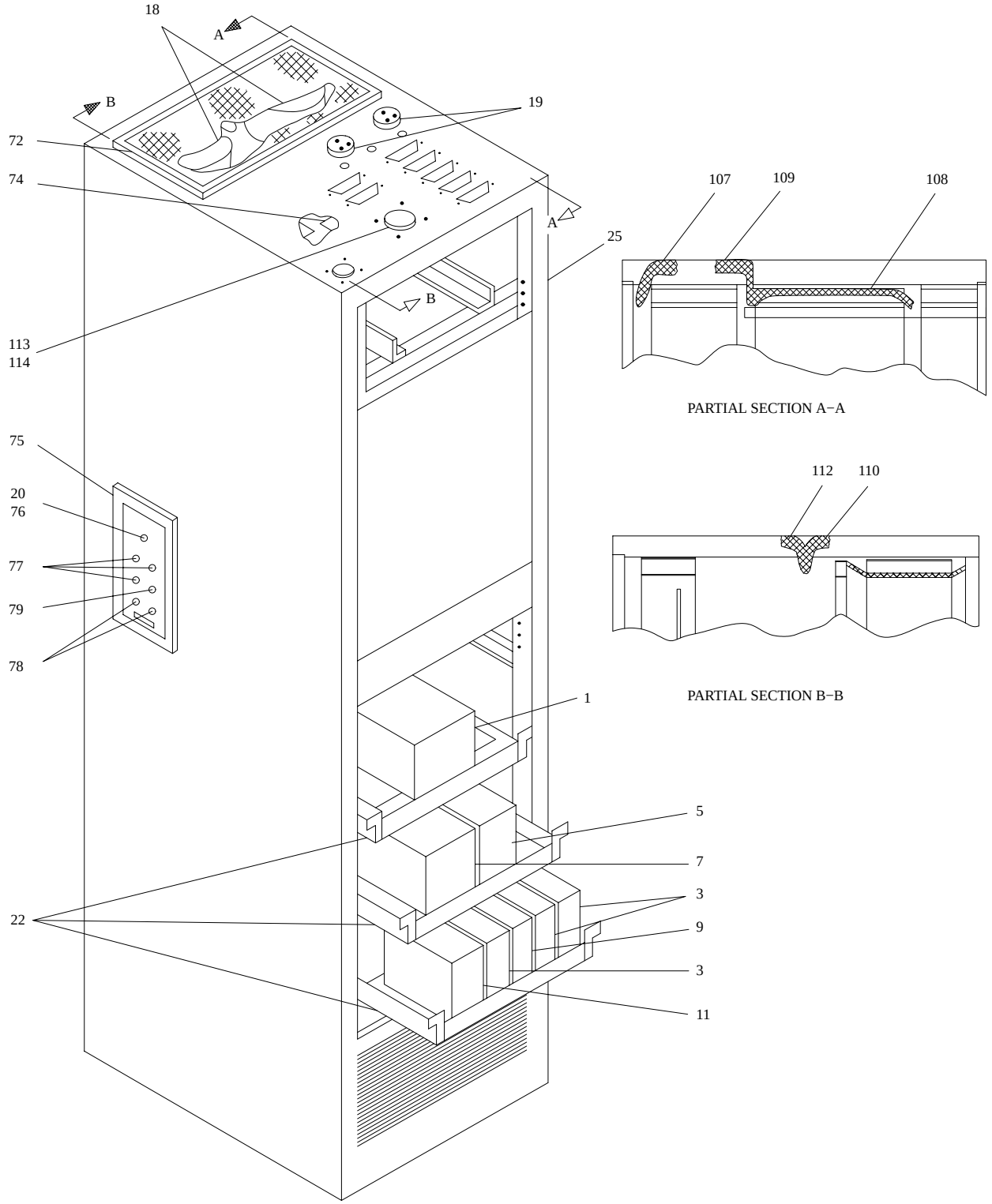

NX1146

FRONT VIEW
(DOOR REMOVED FOR CLARITY)

FIGURE 17. Radar Receiver, UD4 (Sheet 1 of 6)

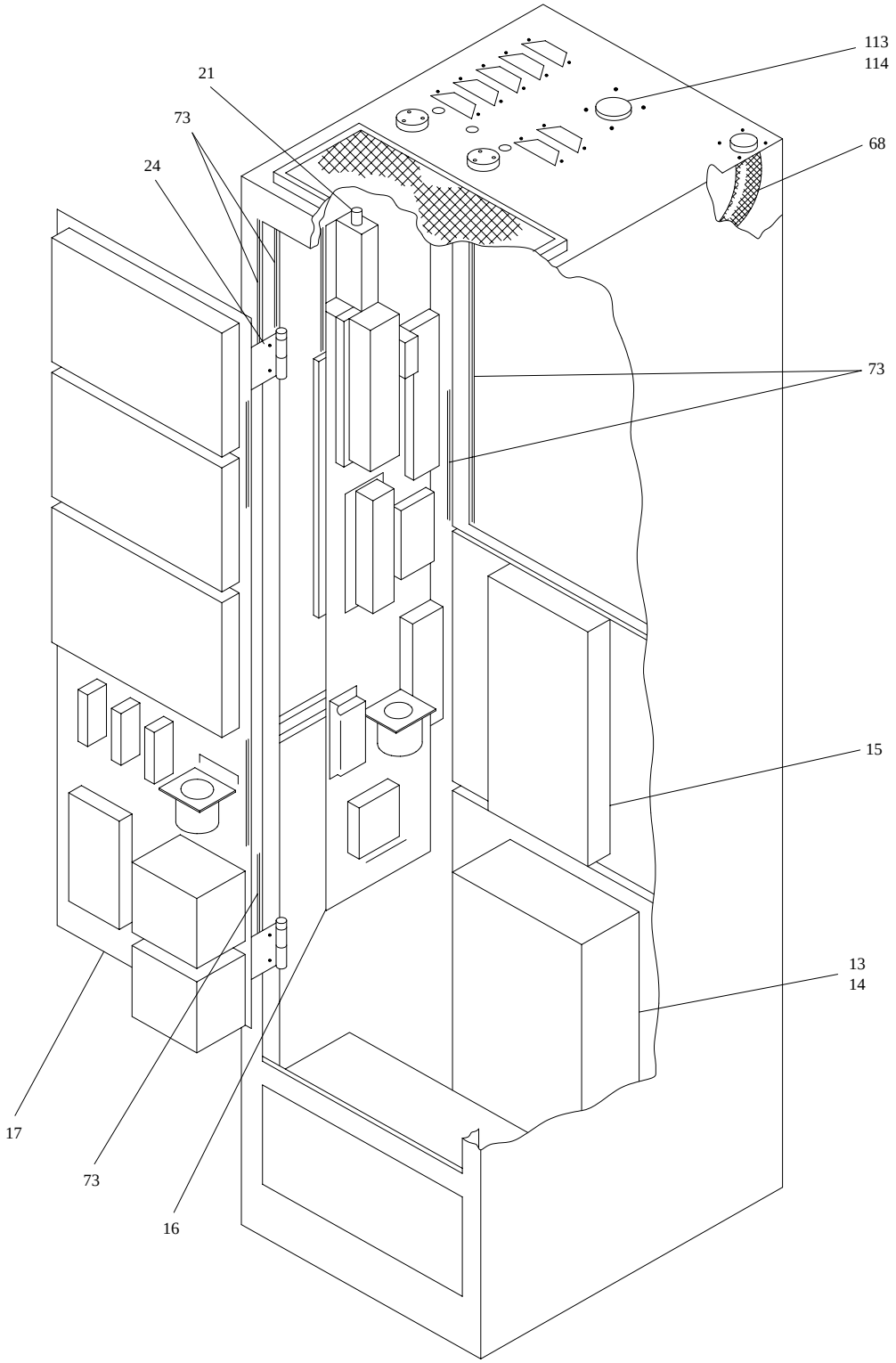

NX1147

REAR VIEW
(DOOR REMOVED FOR CLARITY)

FIGURE 17. Radar Receiver, UD4 (Sheet 2 of 6)

CABLE ASSEMBLIES (NOT SHOWN)

INDEX NO.	REF DES	FROM	TO
17−27	4/104W100	P1(A36)	J15
17−28	4/104W104	P1(A24J2)	J16
17−29	4/104W105	P1(A33)	J18
17−30	4/104W110	P1(A22J2)	J17
17−31	4/104W114	P1(A22J3)	P2(A1J3)
17−32	4/104W115	P1(A1J2)	P2(A5J2)
17−33	4/104W129	P1(A1J1)	J19
17−34	4/104W132	P1(A20J4)	J25
17−35	4/104W208	P1(A9J2)	P2(A10J1)
17−36	4/104W220	P1(A10J3)	P2(A28J5)
17−37	4/104W222	P1(A1J4)	P2(A10J2)
17−38	4/104W310	P1(A29J2)	P2(A31J4)
17−39	4/104W315	P1(A11J3)	P2(A10J4)
17−40	4/104W316	P1(A11J2)	P2(A10J6)
17−41	4/104W319	P1(A11J1)	P2(A12J4)
17−42	4/104W320	P1(A10J5)	J9
17−43	4/104W321	P1(A10J7)	J10
17−44	4/104W322	P1(A12J3)	J14
17−45	4/104W323	P1(A31J9)	J11
17−46	4/104W405	P1(A1J5)	P2(A32J7)
17−47	4/104W408	P1(A11J5)	J20
17−48	4/104W409	P1(A13J8)	J23
17−49	4/104W411	P1(A32J9)	J21
17−50	4/104W412	P1(A32J13)	J22
17−51	4/104W413	P1(A26J2) P2(A32J4)	J2, J7, J8, J12, J13, J24
17−52	4/104W516	P1(A11J4)	PS2, PS7, PS8
17−53	4/104W518	P1(A32J6)	PS9
17−54	4/104W706	TB5	PS1
17−58	4/104W707	TB5	PS5
17−62	4/104W521	TB5	P1(B1) P2(B2)
17−64	4/104W709	TB5	PS8
17−68	4/104W710	J26	TB5

FIGURE 17. Radar Receiver, UD4 (Sheet 3 of 6)

CABLE ASSEMBLIES (NOT SHOWN)

INDEX NO.	REF DES	FROM	TO
17−81		TB3	PS1, PS4 THRU PS6
17−87		TB2	TB3
17−91		PS5	PS4
17−93		TB1	PS1, PS4, PS9
17−96		PS8	PS2
17−96		PS2	PS6
17−96		PS6	PS7
17−96		PS7	PS9
17−99		TB1	PS1, PS2, PS4 THRU PS9
17−104		TB1	B1−GND, B2−GND
17−114	4/104W900	4A37J1	J27

FIGURE 17. Radar Receiver, UD4 (Sheet 4 of 6)

PART NUMBERS AND FREQUENCIES

INDEX NO.	REF DES	FREQUENCY	RDL PART NO. (16478)	LOCKHEED MARTIN PART NO. (56232)
17−14	4A1A1	2705	P10S331−2705	1213634−202
		2707	P10S331−2707	1213634−253
		2710	P10S331−2710	1213634−203
		2715	P10S331−2715	1213634−204
		2720	P10S331−2720	1213634−206
		2725	P10S331−2725	1213634−207
		2730	P10S331−2730	1213634−208
		2735	P10S331−2735	1213634−209
		2740	P10S331−2740	1213634−261
		2745	P10S331−2745	1213634−255
		2750	P10S331−2750	1213634−210
		2755	P10S331−2755	1213634−211
		2760	P10S331−2760	1213634−212
		2768	P10S331−2768	1213634−214
		2770	P10S331−2770	1213634−215
		2780	P10S331−2780	1213634−217
		2800	P10S331−2800	1213634−221
		2802	P10S331−2802	1213634−222
		2805	P10S331−2805	1213634−223
		2810	P10S331−2810	1213634−224
		2820	P10S331−2820	1213634−256
		2830	P10S331−2830	1213634−225
		2835	P10S331−2835	1213634−226
		2840	P10S331−2840	1213634−227
		2848	P10S331−2848	1213634−230
		2850	P10S331−2850	1213634−231
		2855	P10S331−2855	1213634−232
		2860	P10S331−2860	1213634−233
		2865	P10S331−2865	1213634−234
		2870	P10S331−2870	1213634−235
		2875	P10S331−2875	1213634−236
		2880	P10S331−2880	1213634−237
		2885	P10S331−2885	1213634−239
		2886	P10S331−2886	1213634−240
		2890	P10S331−2890	1213634−2890

FIGURE 17. Radar Receiver, UD4 (Sheet 5 of 6)

PART NUMBERS AND FREQUENCIES

INDEX NO.	REF DES	FREQUENCY	PREMIER PART NO. (28916)	LOCKHEED MARTIN PART NO. (56232)
17−14 (cont.)		2891	P10S331−2891	1213634−244
		2895	P10S331−2895	1213634−254
		2896	P10S331−2896	1213634−252
		2905	P10S331−2905	1213634−257
		2910	P10S331−2910	1213634−251
		2913	P10S331−2913	1213634−259
		2922	P10S331−2922	1213634−260
		2934	P10S331−2934	1213634−265
		2950	P10S331−2950	1213634−262
		2993	P10S331−2993	1213634−263
		2995	P10S331−2995	1213634−250

FIGURE 17. Radar Receiver, UD4 (Sheet 6 of 6)

FIGURE AND INDEX NO.	REF DES	PART NUMBER	INDENT	DESCRIPTION	CAGE CODE	QTY PER ASSY	CODES SMR	CODES USABLE ON
17−	4 * 104	1525325−XXX	1	RECEIVER, RADAR (For NHA see FIGURE 2 on Page 2 − 17)	56232	REF	PBFDD	
17−1	4PS1	SPS3412	2	± 18V POWER SUPPLY ASSEMBLY (56232) (spec dwg 1213675−213)	3L493	1	PAODD	
17−2	4PS1F1 ***	MDA8	3	FUSE, 250V, CERAMIC	71400	1	PAOZZ	
17−3	4PS2 4PS7 4PS9	SPS3404	2	+ 5V POWER SUPPLY ASSEMBLY (56232) (spec dwg 1213675−201)	3L493	3	PAODD	
17−4	4PS2F1 *** 4PS7F1 4PS9F1	F02B250V1A	3	FUSE, 250V, GLASS	81349	3	PAOZZ	
17−5	4PS4	SPS3409	2	− 9V POWER SUPPLY ASSEMBLY (56232) (spec dwg 1213675−208)	3L493	1	PAODD	
17−6	4PS4F1 ***	F02B250V3A	3	FUSE, 250V, GLASS	81349	1	PAOZZ	
17−7	4PS5	SPS3411	2	+ 5V POWER SUPPLY ASSEMBLY (56232) (spec dwg 1213675−204)	3L493	1	PAODD	
17−8	4PS5F1 ***	F02B125V6¼A	3	FUSE, 125V, GLASS	81349	1	PAOZZ	
17−9	4PS6	SPS3406	2	+ 9V POWER SUPPLY ASSEMBLY (56232) (spec dwg 1213675−217)	3L493	1	PAODD	
17−10	4PS6F1 ***	F02B250V1A	3	FUSE, 250V, GLASS	81349	1	PAOZZ	
17−11	4PS8	SPS3410	2	± 15V POWER SUPPLY ASSEMBLY (56232) (spec dwg 1213675−209)	3L493	1	PAODD	
17−12	4PS8F1 ***	F02B250V3A	3	FUSE, 250V, GLASS	81349	1	PAOZZ	
				(ATTACHING PARTS)				
		MS51958−62	2	SCREW	96906	32	PAOZZ	
		MS51958−63	2	SCREW	96906	4	PAOZZ	
		MS35338−138	2	WASHER	96906	36	PAOZZ	
		MS15795−808	2	WASHER	96906	36	PAOZZ	
				− − − − − − − − −				
17−13	4A1	P10S331	2	FREQUENCY GENERATOR, WITHOUT MODULE (56232) (source ctrl dwg 1213634−201)	16478	1	PAODD	

NOTE * : SITE DEPENDENT
NOTE ** : SELECT AT TEST
NOTE *** : NOT SHOWN

FIGURE AND INDEX NO.	REF DES	PART NUMBER	INDENT	DESCRIPTION	CAGE CODE	QTY PER ASSY	CODES SMR	CODES USABLE ON
				(ATTACHING PARTS)				
		MS51958−62	2	SCREW	96906	6	PAOZZ	
		MS35338−138	2	WASHER	96906	6	PAOZZ	
		MS15795−808	2	WASHER	96906	6	PAOZZ	
				− − − − − − − − −				
17−14	4A1A1 *	P10S331−2XXX	3	MODULE, FREQUENCY GENERATOR (56232) (source ctrl dwg 1213634−2XX) (Frequency specific, refer to FIGURE 17 Sheet 5)	16478	1	PAOLD	
17−15	4A11	1526322−301	2	A/D CONVERTER ASSEMBLY	56232	1	PAOLD	
17−16	4Z1N1 *	1213714−XXX	2	RF PANEL ASSEMBLY (For breakdown see FIGURE 18 on Page 2 − 186)	56232	1	AD	
17−17	4Z1N2	1213715−301	2	HINGED DOOR ASSEMBLY (For breakdown see FIGURE 19 on Page 2 − 196)	56232	1	XA	A
		1213715−302	2	HINGED DOOR ASSEMBLY (For breakdown see FIGURE 19 on Page 2 − 196)	56232	1	XA	B
17−18	4B1 4B2	028254	2	FAN, TUBEAXIAL, CIRCULAR FRAME (56232) (spec dwg 1213829−201)	5Y921	2	PAOZZ	
				(ATTACHING PARTS)				
		MS51957−32	2	SCREW	96906	6	PAOZZ	
		MS15795−805	2	WASHER	96906	12	PAOZZ	
		MS35338−136	2	WASHER	96906	6	PAOZZ	
		MS35649−264	2	NUT	96906	6	PAOZZ	
				− − − − − − − − −				
17−19		2260B	2	ADAPTER, COAX 7/8 IN. (16733) (ALT PN 921122) (56232) (spec dwg 1214650−201)	84147	2	PAOZZ	
17−20		8503812FP−3	2	ADAPTER, CONNECTOR	14933	1	PAOZZ	
17−21	4A36 *	4778−1.0	2	ATTENUATOR, FIXED (64537) (ALT PN A619CS) (93459) (ALT PN 3M−1) (56232) (spec dwg 1214923−201)	99899	1	PAOZZ	

NOTE * : SITE DEPENDENT
NOTE ** : SELECT AT TEST
NOTE *** : NOT SHOWN

FIGURE AND INDEX NO.	REF DES	PART NUMBER	INDENT	DESCRIPTION	CAGE CODE	QTY PER ASSY	CODES SMR	CODES USABLE ON
	4A36 *	4778−2.0	2	ATTENUATOR, FIXED (64537) (ALT PN A620CS) (93459) (ALT PN 3M−2) (56232) (spec dwg 1214923−202)	99899	1	PAOZZ	
	4A36 *	4778−3.0	2	ATTENUATOR, FIXED (64537) (ALT PN A621CS) (93459) (ALT PN 3M−3) (56232) (spec dwg 1214923−203)	99899	1	PAOZZ	
17−22		C−300S−10	2	SLIDE, DRAWER, EXTENSION (Consists of 2 identical slides plus mounting hardware) (56232) (spec dwg 1213933−201)	98376	3	PAOZZ	
17−23	21MP8 ***	C−300S−20	2	DRAWER, SLIDE (Consists of 2 identical slides plus mounting hardware) (56232) (spec dwg 1213933−202)	98376	1	PAOZZ	
17−24		7000301225	2	HINGE, BUTT (56232) (spec dwg 1213948−201)	03007	2	XC	
17−25	4Z1	26−40757	2	CABINET, ELECTRICAL EQUIPMENT (56232) (spec dwg 1213453−201)	19178	1	XB	
17−26	4Z1MP1 ** ***	1030−20220−1026	3	RFI, SHIELDING, DOOR (Order shielding per foot)	0R2V9	AR	PCOZZ	
17−27	4/104W100 ***	90−894−202	2	CABLE ASSEMBLY, RF (65474) (ALT PN G5R01N11011.5) (56232) (spec dwg 1213535−202)	57500	1	PAOZZ	
17−28	4/104W104 ***	90−894−201	2	CABLE ASSEMBLY, RF (65474) (ALT PN G5R11N11005.5/180 DEG) (56232) (spec dwg 1213535−201)	57500	1	PAOZZ	
17−29	4/104W105 ***	90−856−201	2	CABLE ASSEMBLY, RF (56232) (spec dwg 1213536−201)	57500	1	PAOZZ	
17−30	4/104W110 ***	90−856−202	2	CABLE ASSEMBLY, RF (56232) (spec dwg 1213536−202)	57500	1	PAOZZ	
17−31	4/104W114 ***	90−867−201	2	CABLE ASSEMBLY, RF (56232) (spec dwg 1213544−201)	57500	1	PAOZZ	

NOTE * : SITE DEPENDENT
NOTE ** : SELECT AT TEST
NOTE *** : NOT SHOWN

FIGURE AND INDEX NO.	REF DES	PART NUMBER	INDENT	DESCRIPTION	CAGE CODE	QTY PER ASSY	CODES SMR	CODES USABLE ON
17−32	4/104W115 ***	90−867−202	2	CABLE ASSEMBLY, RF (56232) (spec dwg 1213544−202)	57500	1	PAOZZ	
17−33	4/104W129 ***	90−895−201	2	CABLE ASSEMBLY, RF (17217) (ALT PN G5R11N62074.0) (56232) (spec dwg 1213559−201)	57500	1	PAOZZ	
17−34	4/104W132 ***	90−857−203	2	CABLE ASSEMBLY, RF (56232) (spec dwg 1213537−203)	57500	1	PAOZZ	
17−35	4/104W208 ***	90−855−209	2	CABLE ASSEMBLY, RF, FLEX, SMA (0GP12) (ALT PN R296600−325) (56232) (spec dwg 1213528−209)	57500	1	PAOZZ	
17−36	4/104W220 ***	90−857−204	2	CABLE ASSEMBLY, RF, FLEX, SMA (56232) (spec dwg 1213537−204)	57500	1	PAOZZ	
17−37	4/104W222 ***	90−857−205	2	CABLE ASSEMBLY, RF, FLEX, SMA (56232) (spec dwg 1213537−205)	57500	1	PAOZZ	
17−38	4/104W310 ***	90−854−207	2	CABLE ASSEMBLY, TWINAXIAL (56232) (spec dwg 1213529−207)	57500	1	PAOZZ	
17−39	4/104W315 ***	90−864−201	2	CABLE ASSEMBLY, TWINAXIAL (56232) (spec dwg 1213530−201)	57500	1	PAOZZ	
17−40	4/104W316 ***	90−864−202	2	CABLE ASSEMBLY, TWINAXIAL (56232) (spec dwg 1213530−202)	57500	1	PAOZZ	
17−41	4/104W319 ***	90−863−202	2	CABLE ASSEMBLY, FLEX, TRIAX (56232) (spec dwg 1213531−202)	57500	1	PAOZZ	
17−42	4/104W320 ***	90−864−203	2	CABLE ASSEMBLY, TWINAXIAL (56232) (spec dwg 1213530−203)	57500	1	PAOZZ	
17−43	4/104W321 ***	90−864−204	2	CABLE ASSEMBLY, TWINAXIAL (56232) (spec dwg 1213530−204)	57500	1	PAOZZ	
17−44	4/104W322 ***	90−862−201	2	CABLE ASSEMBLY, RF, FLEX, SMA (56232) (spec dwg 1213527−201)	57500	1	PAOZZ	

NOTE * : SITE DEPENDENT
NOTE ** : SELECT AT TEST
NOTE *** : NOT SHOWN

FIGURE AND INDEX NO.	REF DES		PART NUMBER	INDENT	DESCRIPTION	CAGE CODE	QTY PER ASSY	CODES SMR	CODES USABLE ON
17−45	4/104W323	***	90−864−205	2	CABLE ASSEMBLY, TWINAXIAL (56232) (spec dwg 1213530−205)	57500	1	PAOZZ	
17−46	4/104W405	***	1213493−301	2	CABLE ASSEMBLY	56232	1	PAOZZ	
17−47	4/104W408	***	1213496−301	2	CABLE ASSEMBLY	56232	1	PAOZZ	
17−48	4/104W409	***	1213497−301	2	CABLE ASSEMBLY	56232	1	PAOZZ	
17−49	4/104W411	***	1213499−301	2	CABLE ASSEMBLY	56232	1	PAOZZ	
17−50	4/104W412	***	1213500−301	2	CABLE ASSEMBLY	56232	1	PAOZZ	
17−51	4/104W413	***	1214889−301	2	CABLE ASSEMBLY	56232	1	PAOZZ	
17−52	4/104W516	***	1213522−301	2	CABLE ASSEMBLY	56232	1	PAOZZ	
17−53	4/104W518	***	1214547−301	2	CABLE ASSEMBLY	56232	1	PAOZZ	
17−54	4/104W706	***	1214883−301	2	CABLE ASSEMBLY	56232	1	PAOOO	
17−55			MS17143−9	3	TERMINAL LUG	96906	2	PAOZZ	
17−56			MS17143−15	3	TERMINAL LUG	96906	2	PAOZZ	
17−57			MS17143−13	3	TERMINAL LUG	96906	1	PAOZZ	
17−58	4/104W707	***	1214883−302	2	CABLE ASSEMBLY	56232	1	PAOOO	
17−59			MS17143−9	3	TERMINAL LUG	96906	2	PAOZZ	
17−60			MS17143−15	3	TERMINAL LUG	96906	2	PAOZZ	
17−61			MS17143−13	3	TERMINAL LUG	96906	1	PAOZZ	
17−62	4/104W521	***	1222303−301	2	CABLE ASSEMBLY, FAN	56232	1	PAOOO	
17−63			MS17143−8	3	TERMINAL LUG	96906	2	PAOZZ	
17−64	4/104W709	***	1214883−304	2	CABLE ASSEMBLY	56232	1	PAOOO	
17−65			MS17143−9	3	TERMINAL LUG	96906	2	PAOZZ	
17−66			MS17143−15	3	TERMINAL LUG	96906	2	PAOZZ	
17−67			MS17143−13	3	TERMINAL LUG	96906	1	PAOZZ	
17−68	4/104W710		1214959−301	2	CABLE ASSEMBLY	56232	1	PAOOO	
17−69	4/104W710J26	***	MS3400D24−10P	3	CONNECTOR	96906	1	PAOZZ	
17−70		***	MS25036−112	3	TERMINAL LUG	96906	1	PAOZZ	
17−71		***	MS17143−9	3	TERMINAL LUG	96906	2	PAOZZ	
17−72		*	60−02075	2	FILTER, EMI (56232) (spec dwg 1213832−201)	07700	1	PAOZZ	
					(ATTACHING PARTS)				
			MS51958−68	2	SCREW	96906	16	PAOZZ	
			MS15795−808	2	WASHER	96906	32	PAOZZ	

NOTE * : SITE DEPENDENT
NOTE ** : SELECT AT TEST
NOTE *** : NOT SHOWN

FIGURE AND INDEX NO.	REF DES	PART NUMBER	INDENT	DESCRIPTION	CAGE CODE	QTY PER ASSY	CODES SMR	CODES USABLE ON
		MS35338−138	2	WASHER	96906	16	PAOZZ	
				− − − − − − − − −				
17−73	*	MS21266−3T	2	GROMMET	96906	6	PAOZZ	
17−74	4TB5 *	39TB8F	2	TERMINAL BOARD	81349	1	PAOZZ	
				(ATTACHING PARTS)				
		MS51958−67	2	SCREW	96906	2	PAOZZ	
		MS35338−138	2	WASHER	96906	2	PAOZZ	
		MS15795−808	2	WASHER	96906	2	PAOZZ	
		NAS1831C6E10	2	POST	80205	2	PAOZZ	
		MS35650−304	2	NUT	96906	2	PAOZZ	
				− − − − − − − − −				
17−75		1214647−201	2	GASKET, SHIELDING	56232	1	PCOZZ	
17−76		51T−1372	2	DUMMY LOAD (56232) (spec dwg 1217077−201)	52750	1	PAOZZ	
17−77		TNG1−8−124	2	TERMINATION (56232) (spec dwg 1214760−201)	14949	3	PAOZZ	
17−78		4700−51	2	TERMINATION (56232) (spec dwg 1217078−201)	74868	2	PAOZZ	
17−79		39575	2	TERMINATION (56232) (spec dwg 1217078−202)	74868	1	PAOZZ	
17−80	***	P4006−1420	2	CLAMP, RIM CLENCHING (56232) (spec dwg 1215228−201)	96195	3	PAOZZ	
17−81		1214878−301	2	WIRING HARNESS	56232	1	PAOOO	
17−82	***	MS25036−106	3	TERMINAL LUG	96906	5	PAOZZ	
17−83	***	MS25036−153	3	TERMINAL LUG	96906	3	PAOZZ	
17−84	***	MS25036−156	3	TERMINAL LUG	96906	1	PAOZZ	
17−85	***	MS17143−2	3	TERMINAL LUG	96906	5	PAOZZ	
17−86	***	MS17143−14	3	TERMINAL LUG	96906	4	PAOZZ	
17−87		1214879−301	2	WIRING HARNESS	56232	1	PAOOO	
17−88	***	MS25036−153	3	TERMINAL LUG	96906	4	PAOZZ	
17−89	***	MS25036−106	3	TERMINAL LUG	96906	10	PAOZZ	
17−90	***	MS25036−156	3	TERMINAL LUG	96906	1	PAOZZ	
17−91		1214881−301	2	WIRING HARNESS	56232	1	PAOOO	
17−92	***	MS17143−14	3	TERMINAL LUG	96906	6	PAOZZ	

NOTE * : SITE DEPENDENT
NOTE ** : SELECT AT TEST
NOTE *** : NOT SHOWN

FIGURE AND INDEX NO.	REF DES	PART NUMBER	INDENT	DESCRIPTION	CAGE CODE	QTY PER ASSY	CODES SMR	CODES USABLE ON
17−93		1214882−301	2	WIRING HARNESS	56232	1	PAOOO	
17−94	***	MS17143−15	3	TERMINAL LUG	96906	3	PAOZZ	
17−95	***	MS25036−112	3	TERMINAL LUG	96906	3	PAOZZ	
17−96		1215262−301	2	WIRING HARNESS	56232	1	PAOOO	
17−97	***	MS17143−14	3	TERMINAL LUG	96906	6	PAOZZ	
17−98	***	MS17143−15	3	TERMINAL LUG	96906	9	PAOZZ	
17−99		1215265−301	2	WIRING HARNESS	56232	1	PAOOO	
17−100	***	MS17143−14	3	TERMINAL LUG	96906	1	PAOZZ	
17−101	***	MS17143−15	3	TERMINAL LUG	96906	6	PAOZZ	
17−102	***	MS17143−2	3	TERMINAL LUG	96906	2	PAOZZ	
17−103	***	MS25036−108	3	TERMINAL LUG	96906	3	PAOZZ	
17−104		1217081−301	2	WIRING HARNESS	56232	1	PAOOO	
17−105	***	MS25036−108	3	TERMINAL LUG	96906	2	PAOZZ	
17−106	***	MS25036−112	3	TERMINAL LUG	96906	1	PAOZZ	
17−107		1217074−302	2	GROUND STRAP	56232	2	PAOZZ	
				(ATTACHING PARTS)				
		MS51958−62	2	SCREW	96906	3	PAOZZ	
		MS35338−138	2	WASHER	96906	3	PAOZZ	
		MS15795−808	2	WASHER	96906	3	PAOZZ	
				− − − − − − − − −				
17−108		1217074−304	2	GROUND STRAP	56232	1	PAOZZ	
				(ATTACHING PARTS)				
		MS51958−62	2	SCREW	96906	2	PAOZZ	
		MS35338−138	2	WASHER	96906	2	PAOZZ	
		MS15795−808	2	WASHER	96906	2	PAOZZ	
				− − − − − − − − −				
17−109		1217074−311	2	GROUND STRAP	56232	1	PAOZZ	
				(ATTACHING PARTS)				
		MS51958−62	2	SCREW	96906	1	PAOZZ	
		MS35338−138	2	WASHER	96906	1	PAOZZ	
		MS15795−808	2	WASHER	96906	1	PAOZZ	
				− − − − − − − − −				
17−110		1217074−317	2	GROUND STRAP	56232	1	PAOZZ	

NOTE * : SITE DEPENDENT
NOTE ** : SELECT AT TEST
NOTE *** : NOT SHOWN

FIGURE AND INDEX NO.	REF DES	PART NUMBER	INDENT	DESCRIPTION	CAGE CODE	QTY PER ASSY	CODES SMR	CODES USABLE ON
				(ATTACHING PARTS)				
		MS35308−306	2	SCREW	96906	1	PAOZZ	
		MS35338−139	2	WASHER	96906	1	PAOZZ	
		MS15795−810	2	WASHER	96906	1	PAOZZ	
				− − − − − − − − −				
17−111	***	1217074−318	2	GROUND STRAP	56232	1	PAOZZ	
				(ATTACHING PARTS)				
		MS51958−62	2	SCREW	96906	1	PAOZZ	
		MS35338−138	2	WASHER	96906	1	PAOZZ	
		MS15795−808	2	WASHER	96906	1	PAOZZ	
				− − − − − − − − −				
17−112		1217074−316	2	GROUND STRAP	56232	1	PAOZZ	
17−113	4/104A37	2300005−301	2	TERMINAL BOARD ASSEMBLY RECEIVER (FAA RMS)	0WY55	1	PAOZZ	C
17−114	4/104W900 ***	2320006−301	2	CABLE ASSEMBLY (FAA RMS)	0WY55	1	PAOZZ	C

USABLE ON CODES

A − BASE PLUS ADDITIONAL INTERFERENCE SUPPRESSION CONFIGURATION

B − BASE CONFIGURATION

C − FAA RMS

NOTE * : SITE DEPENDENT

NOTE ** : SELECT AT TEST

NOTE *** : NOT SHOWN

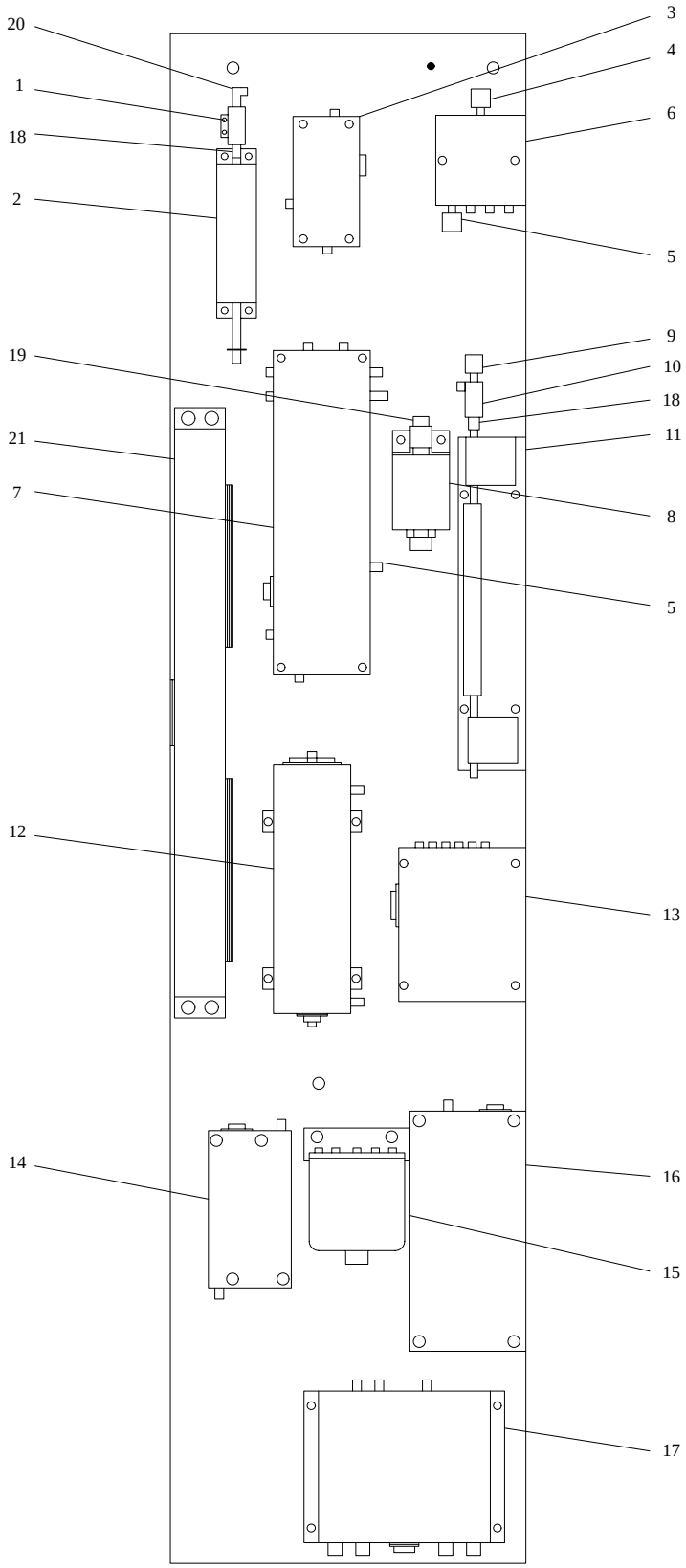

NX1148

FIGURE 18. RF Panel Assembly (Part of UD4) (Sheet 1 of 4)

CABLE ASSEMBLIES (NOT SHOWN)

INDEX NO.	REF DES	FROM	TO
18−22	4/104W102	P1(A4J2)	P2(A5J1)
18−23	4/104W103	P1(DC2−20db)	P2(A24J3)
18−24	4/104W106	P1(A20J2)	P2(A34)
18−25	4/104W107	P1(A26J1)	P2(A20J3)
18−26	4/104W109	P1(A22J1)	P2(A21J2)
18−27	4/104W111	P1(A22J4)	P2(A25J1)
18−28	4/104W112	P1(A22J5)	P2(A23J1)
18−29	4/104W113	P1(A24J1)	P2(A23J2)
18−30	4/104W116	P1(A5J6)	P2(A27J2)
18−31	4/104W117	P1(A5J5)	P2(A27J1)
18−32	4/104W118	P1(A27J5)	P2(DC1−40db)
18−33	4/104W119	P1(A24J4)	P2(A27J8)
18−34	4/104W120	P1(A22J7)	P2(A27J3)
18−35	4/104W121	P1(A23J3)	P2(A27J6)
18−36	4/104W122	P1(A23J4)	P2(A27J7)
18−37	4/104W123	P1(A27COM)	P2(A29J1)
18−38	4/104W128	P1(A22J6)	P2(A27J4)
18−39	4/104W401	P1(A22J8)	P2(A32J8)
18−43	4/104W402	P1(A32J10) P2(A24J5)	P3(A25J2) P4(A19J7)
18−47	4/104W404	P1(A27J11)	P2(A32J11)
18−51	4/104W424	P1(A32J10)	P3(A25J2) P2(A24J5)
18−55	4/104W502	P1(A10J8)	TB3C
18−58	4/104W505	P1(A1J6)	TB3A
18−61	4/104W506	P1(A5J8)	TB3F
18−64	4/104W507	P1(A23J5)	TB3D
18−67	4/104W508	P1(A29J3)	TB3B
18−70	4/104W200	P1(A5J3)	P2(A6J1)
18−71	4/104W201	P1(A5J7)	P2(A28J1)
18−72	4/104W211	P1(A5J4)	P2(A14J1)
18−73	4/104W400	P1(A23J6)	P2(A32J5)

FIGURE 18. RF Panel Assembly (Part of UD4) (Sheet 2 of 4)

PART NUMBERS AND FREQUENCIES

INDEX NO.	REF DES	FREQUENCY	MICRO PHASE NO. (01341)	LOCKHEED MARTIN PART NO. (56232)
18−2	4A4	2705	R4580−201	1213617−201
		2710	R4580−202	1213617−202
		2715	R4580−203	1213617−203
		2720	R4580−205	1213617−205
		2725	R4580−206	1213617−206
		2730	R4580−207	1213617−207
		2735	R4580−208	1213617−208
		2740	R4580−260	1213617−260
		2745	R4580−254	1213617−254
		2750	R4580−209	1213617−209
		2755	R4580−210	1213617−210
		2760	R4580−211	1213617−211
		2770	R4580−214	1213617−214
		2780	R4580−216	1213617−216
		2800	R4580−220	1213617−220
		2802	R4580−221	1213617−221
		2805	R4580−222	1213617−222
		2810	R4580−223	1213617−223
		2830	R4580−224	1213617−224
		2840	R4580−226	1213617−226
		2848	R4580−229	1213617−229
		2850	R4580−230	1213617−230
		2855	R4580−231	1213617−231
		2860	R4580−232	1213617−232
		2865	R4580−233	1213617−233
		2870	R4580−234	1213617−234
		2875	R4580−235	1213617−235
		2880	R4580−236	1213617−236
		2885	R4580−238	1213617−238
		2886	R4580−239	1213617−239
		2890	R4580−242	1213617−242
		2891	R4580−243	1213617−243
		2895	R4580−253	1213617−253
		2905	R4580−256	1213617−256
		2910	R4580−251	1213617−251

FIGURE 18. RF Panel Assembly (Part of UD4) (Sheet 3 of 4)

PART NUMBERS AND FREQUENCIES

INDEX NO.	REF DES	FREQUENCY	MICRO PHASE NO. (01341)	LOCKHEED MARTIN PART NO. (56232)
18−2 (cont.)		2913	R4580−258	1213617−258
		2922	R4580−259	1213617−259
		2934	R4580−264	1213617−264
	4A4	2705	R4983−201	1213669−201
		2707	R4983−252	1213669−252
		2710	R4983−202	1213669−202
		2720	R4983−205	1213669−205
		2730	R4983−207	1213669−207
		2750	R4983−209	1213669−209
		2768	R4983−213	1213669−213
		2770	R4983−214	1213669−214
		2820	R4983−255	1213669−255
		2835	R4983−225	1213669−225
		2848	R4983−229	1213669−229
		2850	R4983−230	1213669−230
		2855	R4983−231	1213669−231
		2865	R4983−233	1213669−233
		2870	R4983−234	1213669−234
		2875	R4983−235	1213669−235
		2880	R4983−236	1213669−236
		2885	R4983−238	1213669−238
		2886	R4983−239	1213669−239
		2890	R4983−242	1213669−242
		2895	R4983−253	1213669−253
		2896	R4983−250	1213669−250
		2950	R4983−261	1213669−261
		2995	R4983−249	1213669−249

FIGURE 18. RF Panel Assembly (Part of UD4) (Sheet 4 of 4)

FIGURE AND INDEX NO.	REF DES	PART NUMBER	INDENT	DESCRIPTION	CAGE CODE	QTY PER ASSY	CODES SMR	CODES USABLE ON
18−	4Z1N1 *	1213714−XXX	1	RF PANEL ASSEMBLY (For NHA see FIGURE 17 on page 2 − 172)	56232	REF	AD	
18−1	4DC2	CL−F13	2	COUPLER, DIRECTIONAL (56232) (spec dwg 1214623−201)	64537	1	PAOZZ	
18−2	4A4 *	R4983−XXX	2	FILTER, BANDPASS (56232) (source ctrl dwg 1213669−XXX) (Frequency specific, refer to FIGURE 18 Sheet 4)	01341	1	PAOLD	
	4A4 *	R4580−XXX	2	FILTER, BANDPASS, PRESELECT (56232) (spec dwg 1213617−XXX) (Frequency specific, refer to FIGURE 18 Sheet 3)	01341	1	PAOLD	
				(ATTACHING PARTS)				
		MS51957−45	2	SCREW	96906	4	PAOZZ	
		MS35338−137	2	WASHER	96906	4	PAOZZ	
		MS15795−807	2	WASHER	96906	4	PAOZZ	
				− − − − − − − − −				
18−3	4A24	SW−F89S	2	SWITCH, RF, 2 POSITION (05375) (ALT PN SW−92) (56232) (spec dwg 1213621−201)	64537	1	PAOLD	
				(ATTACHING PARTS)				
		MS51957−23	2	SCREW	96906	4	PAOZZ	
		MS35338−135	2	WASHER	96906	4	PAOZZ	
		MS15795−803	2	WASHER	96906	4	PAOZZ	
				− − − − − − − − −				
18−4	4A33	4T−6	2	ATTENUATOR, FIXED (64537) (ALT PN A617CS) (56232) (spec dwg 1217116−201)	93459	1	PAOZZ	
18−5	4MS15	M39030/3−11N	2	DUMMY LOAD	81349	1	PAOZZ	A
		M39030/3−11N	2	DUMMY LOAD	81349	2	PAOZZ	B
18−6	4A20	D355ES	2	COUPLER, TRANSMISSION LINE (56232) (spec dwg 1213629−201)	64537	1	PAOZZ	
				(ATTACHING PARTS)				
		MS51957−22	2	SCREW	96906	4	PAOZZ	

NOTE * : SITE DEPENDENT
NOTE ** : NOT SHOWN

FIGURE AND INDEX NO.	REF DES	PART NUMBER	INDENT	DESCRIPTION	CAGE CODE	QTY PER ASSY	CODES SMR	CODES USABLE ON
		MS35338−135	2	WASHER	96906	4	PAOZZ	
		MS15795−803	2	WASHER	96906	4	PAOZZ	
				− − − − − − − − −				
18−7	4A5	SG1000	2	MIXER−AMPLIFIER (26058) (ALT PN 13759−0001) (56232) (source ctrl dwg 1213635−201)	8Z475	1	PAOLD	
				(ATTACHING PARTS)				
		MS51957−52	2	SCREW	96906	4	PAOZZ	
		MS35338−137	2	WASHER	96906	4	PAOZZ	
		MS15795−807	2	WASHER	96906	4	PAOZZ	
				− − − − − − − − −				
18−8	4A26	466B−1	2	MONITOR, RF POWER (11332) (ALT PN N425−838) (56232) (spec dwg 1213625−201)	99899	1	PAOLD	
18−9	4A34	60−674−1010−89	2	ATTENUATOR, COAXIAL (99899) (ALT PN 4779−10) (56232) (spec dwg 1213932−202)	98291	1	PAOZZ	
18−10	4DC1	CL−F14	2	COUPLER, DIRECTIONAL (56232) (spec dwg 1214623−202)	64537	1	PAOZZ	
18−11	4A21	MBE−1022	2	DELAY LINE, MICROWAVE (56232) (source ctrl dwg 1213633−201)	24022	1	PAOLD	
				(ATTACHING PARTS)				
		MS51957−17	2	SCREW	96906	4	PAOZZ	
		MS35338−135	2	WASHER	96906	4	PAOZZ	
		MS15795−803	2	WASHER	96906	4	PAOZZ	
				− − − − − − − − −				
18−12	4A23	DA−B48	2	ATTENUATOR, DIGITAL, RF (56232) (spec dwg 1213640−201)	64537	1	PAOLD	
18−13	4A22	SW−F88S	2	SWITCH, RF, 4 POSITION (05375) (ALT PN SW−95) (56232) (spec dwg 1213622−201)	64537	1	PAOLD	
				(ATTACHING PARTS)				
		MS51957−36	2	SCREW	96906	4	PAOZZ	
		MS35338−136	2	WASHER	96906	4	PAOZZ	
	NOTE * : SITE DEPENDENT NOTE ** : NOT SHOWN							

FIGURE AND INDEX NO.	REF DES	PART NUMBER	INDENT	DESCRIPTION	CAGE CODE	QTY PER ASSY	CODES SMR	CODES USABLE ON
		MS15795−803	2	WASHER	96906	4	PAOZZ	
				− − − − − − − − −				
18−14	4A29	R4596−1	2	DETECTOR−VIDEO LOG AMPLIFIER (56232) (source ctrl dwg 1213647−201)	01341	1	PAOLD	
				(ATTACHING PARTS)				
		MS51958−68	2	SCREW	96906	4	PAOZZ	
		MS35338−138	2	WASHER	96906	4	PAOZZ	
		MS15795−808	2	WASHER	96906	4	PAOZZ	
				− − − − − − − − −				
18−15	4A27	N10−427J001	2	SWITCH, RF, TRANSMISSION LINE (56232) (spec dwg 1213646−201)	50667	1	PAOLD	
				(ATTACHING PARTS)				
		MS51957−45	2	SCREW	96906	2	PAOZZ	
		MS35338−137	2	WASHER	96906	2	PAOZZ	
		MS15795−807	2	WASHER	96906	2	PAOZZ	
				− − − − − − − − −				
18−16	4A25	RFN−363	2	GENERATOR, THERMAL NOISE (56232) (source ctrl dwg 1213642−201)	54487	1	PAOLD	
				(ATTACHING PARTS)				
		MS51957−36	2	SCREW	96906	4	PAOZZ	
		MS35338−136	2	WASHER	96906	4	PAOZZ	
		MS15795−805	2	WASHER	96906	4	PAOZZ	
				− − − − − − − − −				
18−17	4A10	IF/52043	2	DETECTOR, PHASE DIFFERENCE (56232) (source ctrl dwg 1213639−201)	12457	1	PAOLD	
				(ATTACHING PARTS)				
		MS51957−30	2	SCREW	96906	4	PAOZZ	
		MS35338−136	2	WASHER	96906	4	PAOZZ	
		MS15795−805	2	WASHER	96906	4	PAOZZ	
				− − − − − − − − −				
18−18	4MS42	M55339/29−30001	2	ADAPTER	81349	2	PAOZZ	

NOTE * : SITE DEPENDENT
NOTE ** : NOT SHOWN

FIGURE AND INDEX NO.	REF DES	PART NUMBER	INDENT	DESCRIPTION	CAGE CODE	QTY PER ASSY	CODES SMR	CODES USABLE ON
18−19		3080−2240−00	2	ADAPTER, SMA JACK TO N JACK (98291) (ALT PN 50−672−6701−89) (56232) (spec dwg 1214788−201)	26805	1	PAOZZ	
18−20		M55339/02−30001	2	ADAPTER	81349	1	PAOZZ	
18−21	4TB3	700300	2	BUS BAR ASSEMBLY (56232) (spec dwg 1214663−201)	58467	1	XB	
18−22	4/104W102 **	1213533−301	2	CABLE ASSEMBLY	56232	1	PAOZZ	
18−23	4/104W103 **	1213534−301	2	CABLE ASSEMBLY	56232	1	PAOZZ	
18−24	4/104W106 **	90−857−201	2	CABLE ASSEMBLY, RF (56232) (spec dwg 1213537−201)	57500	1	PAOZZ	
18−25	4/104W107 **	90−857−202	2	CABLE ASSEMBLY, RF (56232) (spec dwg 1213537−202)	57500	1	PAOZZ	
18−26	4/104W109 **	1213539−301	2	CABLE ASSEMBLY	56232	1	PAOZZ	
18−27	4/104W111 **	1213541−301	2	CABLE ASSEMBLY	56232	1	PAOZZ	
18−28	4/104W112 **	1213542−301	2	CABLE ASSEMBLY	56232	1	PAOZZ	
18−29	4/104W113 **	1213543−301	2	CABLE ASSEMBLY	56232	1	PAOZZ	
18−30	4/104W116 **	1213546−301	2	CABLE ASSEMBLY	56232	1	PAOZZ	
18−31	4/104W117 **	1213547−301	2	CABLE ASSEMBLY	56232	1	PAOZZ	
18−32	4/104W118 **	1213548−301	2	CABLE ASSEMBLY	56232	1	PAOZZ	
18−33	4/104W119 **	1213549−301	2	CABLE ASSEMBLY	56232	1	PAOZZ	
18−34	4/104W120 **	1213550−301	2	CABLE ASSEMBLY	56232	1	PAOZZ	
18−35	4/104W121 **	1213551−301	2	CABLE ASSEMBLY	56232	1	PAOZZ	
18−36	4/104W122 **	1213552−301	2	CABLE ASSEMBLY	56232	1	PAOZZ	
18−37	4/104W123 **	1213553−301	2	CABLE ASSEMBLY	56232	1	PAOZZ	
18−38	4/104W128 **	1213558−301	2	CABLE ASSEMBLY	56232	1	PAOZZ	
18−39	4/104W401 **	1213489−301	2	CABLE ASSEMBLY	56232	1	PAOOO	
18−40	4/104W401P1 **	M24308/2−2	3	CONNECTOR	81349	1	PAOZZ	
18−41	4/104W401P2 **	M24308/4−1	3	CONNECTOR	81349	1	PAOZZ	
18−42	**	MS25036−159	3	TERMINAL LUG	96906	4	PAOZZ	
18−43	4/104W402 **	1213490−301	2	CABLE ASSEMBLY	56232	1	PAOOO	A
18−44	4/104W402P1 ** 4/104W402P4	M24308/4−1	3	CONNECTOR	81349	2	PAOZZ	A
18−45	4/104W402P2 ** 4/104W402P3	M24308/2−1	3	CONNECTOR	81349	2	PAOZZ	A

NOTE * : SITE DEPENDENT
NOTE ** : NOT SHOWN

FIGURE AND INDEX NO.	REF DES	PART NUMBER	INDENT	DESCRIPTION	CAGE CODE	QTY PER ASSY	CODES SMR	CODES USABLE ON
18−46	**	MS25036−159	3	TERMINAL LUG	96906	7	PAOZZ	A
18−47	4/104W404 **	1213492−301	2	CABLE ASSEMBLY	56232	1	PAOOO	
18−48	4/104W404P1 **	MS3116F14−15S	3	CONNECTOR	96906	1	PAOZZ	
18−49	4/104W404P2 **	M24308/4−2	3	CONNECTOR	81349	1	PAOZZ	
18−50	**	MS25036−159	3	TERMINAL LUG	96906	3	PAOZZ	
18−51	4/104W424 **	1217027−301	2	CABLE ASSEMBLY	56232	1	PAOOO	B
18−52	4/104W424P1 **	DEU−9PF0	3	CONNECTOR, D−SUB, PLUG (56232) (spec dwg 1218768−201)	71468	1	PAOZZ	B
18−53	4/104W424P2 ** 4/104W424P3	DEU−9SF0	3	CONNECTOR, D−SUB, RECEPTACLE (56232) (spec dwg 1218767−201)	71468	2	PAOZZ	B
18−54	**	MS25036−159	3	TERMINAL LUG	96906	7	PAOZZ	B
18−55	4/104W502 **	1213508−301	2	CABLE ASSEMBLY	56232	1	PAOOO	
18−56	4/104W502P1 **	M24308/2−1	3	CONNECTOR	81349	1	PAOZZ	
18−57	**	MS25036−159	3	TERMINAL LUG	96906	3	PAOZZ	
18−58	4/104W505 **	1213511−301	2	CABLE ASSEMBLY	56232	1	PAOOO	
18−59	4/104W505P1 **	M24308/2−2	3	CONNECTOR	81349	1	PAOZZ	
18−60	**	MS25036−159	3	TERMINAL LUG	96906	7	PAOZZ	
18−61	4/104W506 **	1213512−301	2	CABLE ASSEMBLY	56232	1	PAOOO	
18−62	4/104W506P1 **	M24308/2−1	3	CONNECTOR	81349	1	PAOZZ	
18−63	**	MS25036−159	3	TERMINAL LUG	96906	3	PAOZZ	
18−64	4/104W507 **	1213513−301	2	CABLE ASSEMBLY	56232	1	PAOOO	
18−65	4/104W507P1 **	M24308/2−1	3	CONNECTOR	81349	1	PAOZZ	
18−66	**	MS25036−159	3	TERMINAL LUG	96906	4	PAOZZ	
18−67	4/104W508 **	1213514−301	2	CABLE ASSEMBLY	56232	1	PAOOO	
18−68	4/104W508P1 **	M24308/2−1	3	CONNECTOR	81349	1	PAOZZ	
18−69	**	MS25036−159	3	TERMINAL LUG	96906	3	PAOZZ	
18−70	4/104W200 **	90−855−201	2	CABLE ASSEMBLY, RF, FLEX SMA (0GP12) (ALT PN R296600−317) (56232) (spec dwg 1213528−201)	57500	1	PAOZZ	
18−71	4/104W201 **	90−855−202	2	CABLE ASSEMBLY, RF, FLEX SMA (0GP12) (ALT PN R296600−318) (56232) (spec dwg 1213528−202)	57500	1	PAOZZ	

NOTE * : SITE DEPENDENT
NOTE ** : NOT SHOWN

Section II. Maintenance Parts List

FIGURE AND INDEX NO.	REF DES	PART NUMBER	INDENT	DESCRIPTION	CAGE CODE	QTY PER ASSY	CODES SMR	CODES USABLE ON
18−72	4/104W211 **	90−855−212	2	CABLE ASSEMBLY, RF, FLEX, SMA (0GP12) (ALT PN R296600−328) (56232) (spec dwg 1213528−212)	57500	1	PAOZZ	A
18−73	4/104W400 **	1213488−301	2	CABLE ASSEMBLY	56232	1	PAOZZ	

USABLE ON CODES

A − BASE PLUS ADDITIONAL INTERFERENCE SUPPRESSION CONFIGURATION

B − BASE CONFIGURATION

NOTE * : SITE DEPENDENT

NOTE ** : NOT SHOWN

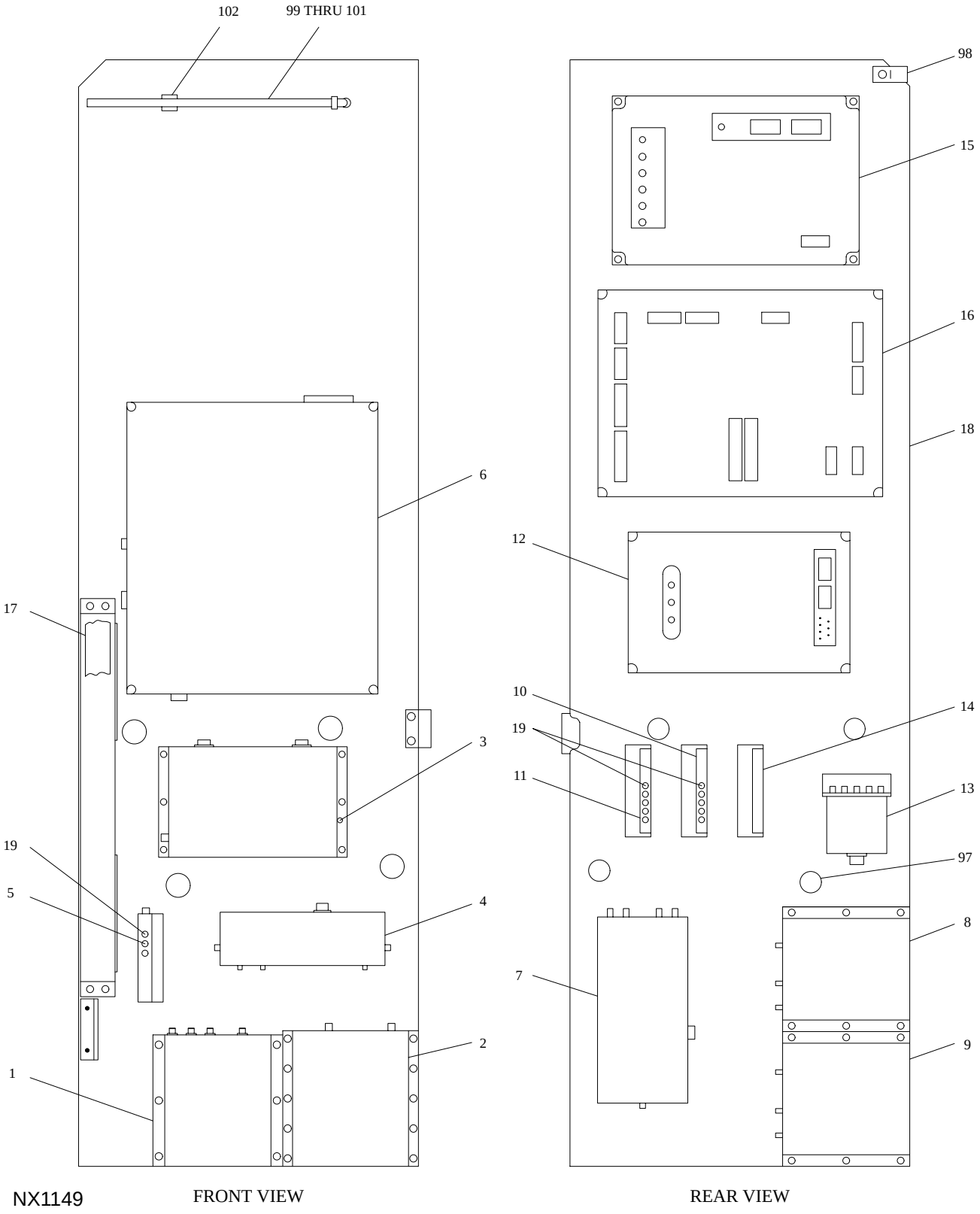

FIGURE 19. Hinged Door Assembly (Part of UD4) (Sheet 1 of 3)

CABLE ASSEMBLIES (NOT SHOWN)

INDEX NO.	REF DES	FROM	TO
19−20	4/104W202	P1(A6J2)	P2(A7J1)
19−21	4/104W203	P1(A6J3)	P2(A12J1)
19−22	4/104W204	P1(A6J4)	P2(A28J6)
19−23	4/104W205	P1(A7J2)	P2(A8J1)
19−24	4/104W206	P1(A8J2)	P2(A9J1)
19−25	4/104W207	P1(A8J3)	P2(A28J4)
19−26	4/104W209	P1(A9J3)	P2(A28J2)
19−27	4/104W210	P1(A9J4)	P2(A28J3)
19−28	4/104W212	P1(A14J2)	P2(A15J1)
19−29	4/104W213	P1(A14J3)	P2(A16J1)
19−30	4/104W214	P1(A14J5)	P2(A28J8)
19−31	4/104W215	P1(A14J4)	P2(A28J7)
19−32	4/104W216	P1(A15J2)	P2(A17J1)
19−33	4/104W217	P1(A16J2)	P2(A18J1)
19−34	4/104W218	P1(A15J3)	P2(A28J9)
19−35	4/104W219	P1(A16J3)	P2(A28J10)
19−36	4/104W221	P1(A28 COM)	P2(A30J1)
19−37	4/104W300	P1(A13J9)	P2(A12J2)
19−38	4/104W302	P1(A12J5)	P2(A19J5)
19−39	4/104W303	P1(A12J6)	P2(A31J6)
19−40	4/104W304	P1(A17J2)	P2(A19J1)
19−41	4/104W306	P1(A18J2)	P2(A19J3)
19−42	4/104W308	P1(A17J4)	P2(A31J7)
19−43	4/104W309	P1(A18J4)	P2(A31J8)
19−44	4/104W311	P1(A30J2)	P2(A31J5)
19−45	4/104W403	P1(A28J11)	P2(A32J12)
19−50	4/104W406	P1(A31J1)	P2(A32J1)
19−55	4/104W407	P1(A31J2)	P2(A32J2)
19−58	4/104W410	P1(A13J10)	P2(A8J5)
19−62	4/104W500	P1(A8J4)	TB2F
19−65	4/104W501	P1(A9J5)	TB2B
19−68	4/104W503	P1(A12J7)	TB2A
19−71	4/104W504	P1(A13J11)	TB2J
19−74	4/104W509	P1(A14J6)	TB2C
19−77	4/104W510	P1(A17J7)	TB2D
19−80	4/104W511	P1(A18J7)	TB2C

FIGURE 19. Hinged Door Assembly (Part of UD4) (Sheet 2 of 3)

CABLE ASSEMBLIES (NOT SHOWN)

INDEX NO.	REF DES	FROM	TO
19−83	4/104W512	P1(A19J6)	TB2F
19−87	4/104W513	P1(A30J3)	TB2D
19−90	4/104W514	P1(A31J3)	TB2H
19−94	4/104W515	P1(A32J3)	TB2G

FIGURE 19. Hinged Door Assembly (Part of UD4) (Sheet 3 of 3)

FIGURE AND INDEX NO.	REF DES	PART NUMBER	INDENT	DESCRIPTION	CAGE CODE	QTY PER ASSY	CODES SMR	CODES USABLE ON
19−	4Z1N2 *	1213715−XXX	1	HINGED DOOR ASSEMBLY (For NHA See FIGURE 17 on Page 2 − 172)	56232	REF	XC	
19−1	4A6	FA4116	2	FILTER ASSEMBLY, MATCHED−BANDPASS (29971) (ALT PN BPP−4−57) (56232) (source ctrl dwg 1213616−201)	54832	1	PAOLD	
				(ATTACHING PARTS)				
		MS51958−62	2	SCREW	96906	6	PAOZZ	
		MS35338−138	2	WASHER	96906	6	PAOZZ	
		MS15795−808	2	WASHER	96906	6	PAOZZ	
				− − − − − − − − −				
19−2	4A7	UT141DL400	2	DELAY LINE, COAXIAL (0BV02) (ALT PN DO50399101) (56232) (spec dwg 1213619−201)	93306	1	PAOLD	
				(ATTACHING PARTS)				
		MS51957−43	2	SCREW	96906	10	PAOZZ	
		MS35338−137	2	WASHER	96906	10	PAOZZ	
		MS15795−807	2	WASHER	96906	10	PAOZZ	
				− − − − − − − − −				
19−3	4A8	IF/51022	2	ATTENUATOR ASSEMBLY, IF (64537) (ALT PN MIC−A18S) (56232) (source ctrl dwg 1213636−201)	12457	1	PAOLD	
				(ATTACHING PARTS)				
		MS51957−30	2	SCREW	96906	6	PAOZZ	
		MS35338−136	2	WASHER	96906	6	PAOZZ	
		MS15795−805	2	WASHER	96906	6	PAOZZ	
				− − − − − − − − −				
19−4	4A9	SG1001	2	IF AMPLIFIER−LIMITER (54832) (ALT PN 435−16841) (56232) (source ctrl dwg 1213637−201)	8Z475	1	PAOLD	
				(ATTACHING PARTS)				
		MS51957−51	2	SCREW	96906	4	PAOZZ	
		MS35338−137	2	WASHER	96906	4	PAOZZ	

NOTE * : SITE DEPENDENT

NOTE ** : NOT SHOWN

FIGURE AND INDEX NO.	REF DES	PART NUMBER	INDENT	DESCRIPTION	CAGE CODE	QTY PER ASSY	CODES SMR	CODES USABLE ON
		MS15795−807	2	WASHER	96906	4	PAOZZ	
				− − − − − − − − −				
19−5	4A12	ICL58A20LO	2	AMPLIFIER−DETECTOR (U4283) (ALT PN HDRA 5810/06411) (56232) (spec dwg 1213638−201)	U4283	1	PAOLD	
				(ATTACHING PARTS)				
		MS51957−20	2	SCREW	96906	4	PAOZZ	
		MS35338−135	2	WASHER	96906	4	PAOZZ	
		MS15795−803	2	WASHER	96906	4	PAOZZ	
				− − − − − − − − −				
19−6	4A13	1213202−301	2	AGC CONTROLLER ASSEMBLY	56232	1	PAOLD	
19−7	4A14	SG1002	2	AMPLIFIER, IF GUARD BAND (54832) (ALT PN 435−16840) (56232) (source ctrl dwg 1213641−201)	8Z475	1	PAOLD	A
				(ATTACHING PARTS)				
		MS51957−51	2	SCREW	96906	4	PAOZZ	A
		MS35338−137	2	WASHER	96906	4	PAOZZ	A
		MS15795−807	2	WASHER	96906	4	PAOZZ	A
				− − − − − − − − −				
19−8	4A15	FA4118	2	FILTER, BANDPASS (29971) (ALT PN BPB−4−64.05) (56232) (source ctrl dwg 1213615−202)	54832	1	PAOLD	A
				(ATTACHING PARTS)				
		MS51958−61	2	SCREW	96906	6	PAOZZ	A
		MS35338−138	2	WASHER	96906	6	PAOZZ	A
		MS15795−808	2	WASHER	96906	6	PAOZZ	A
				− − − − − − − − −				
19−9	4A16	FA4117	2	FILTER, BANDPASS (29971) (ALT PN BPB−4−51.05) (56232) (source ctrl dwg 1213615−201)	54832	1	PAOLD	A
				(ATTACHING PARTS)				
		MS51958−61	2	SCREW	96906	6	PAOZZ	A
		MS35338−138	2	WASHER	96906	6	PAOZZ	A

NOTE * : SITE DEPENDENT
NOTE ** : NOT SHOWN

FIGURE AND INDEX NO.	REF DES	PART NUMBER	INDENT	DESCRIPTION	CAGE CODE	QTY PER ASSY	CODES SMR	CODES USABLE ON
		MS15795−808	2	WASHER	96906	6	PAOZZ	A
				− − − − − − − − −				
19−10	4A17	ICL64A18LN	2	AMPLIFIER−DETECTOR (U4283) (ALT PN HDRA 6410/06413) (56232) (spec dwg 1213638−203)	U4283	1	PAOLD	A
				(ATTACHING PARTS)				
		MS51957−20	2	SCREW	96906	4	PAOZZ	A
		MS35338−135	2	WASHER	96906	4	PAOZZ	A
		MS15795−803	2	WASHER	96906	4	PAOZZ	A
				− − − − − − − − −				
19−11	4A18	ICL51A20LM	2	AMPLIFIER−DETECTOR (U4283) (ALT PN HDRA 5110/06412) (56232) (spec dwg 1213638−202)	U4283	1	PAOLD	A
				(ATTACHING PARTS)				
		MS51957−20	2	SCREW	96906	4	PAOZZ	A
		MS35338−135	2	WASHER	96906	4	PAOZZ	A
		MS15795−803	2	WASHER	96906	4	PAOZZ	A
				− − − − − − − − −				
19−12	4A19	1215108−301	2	INTERFERENCE DETECTOR ASSEMBLY	56232	1	PAOLD	A
				(ATTACHING PARTS)				
		MS51957−20	2	SCREW	96906	4	PAOZZ	A
		MS35338−135	2	WASHER	96906	4	PAOZZ	A
		MS15795−803	2	WASHER	96906	4	PAOZZ	A
				− − − − − − − − −				
19−13	4A28	N10−427J001	2	SWITCH, RF, TRANSMISSION LINE (56232) (spec dwg 1213646−201)	50667	1	PAOLD	
				(ATTACHING PARTS)				
		MS51957−45	2	SCREW	96906	2	PAOZZ	
		MS35338−137	2	WASHER	96906	2	PAOZZ	

NOTE * : SITE DEPENDENT
NOTE ** : NOT SHOWN

FIGURE AND INDEX NO.	REF DES	PART NUMBER	INDENT	DESCRIPTION	CAGE CODE	QTY PER ASSY	CODES SMR	CODES USABLE ON
		MS15795−807	2	WASHER	96906	2	PAOZZ	
				− − − − − − − − −				
19−14	4A30	ICL58J28HN	2	AMPLIFIER−DETECTOR (U4283) (ALT PN PSDA5810/03453) (56232) (spec dwg 1213648−201)	U4283	1	PAOLD	
				(ATTACHING PARTS)				
		MS51957−20	2	SCREW	96906	4	PAOZZ	
		MS35338−135	2	WASHER	96906	4	PAOZZ	
		MS15795−803	2	WASHER	96906	4	PAOZZ	
				− − − − − − − − −				
19−15	4A31	1526635−301	2	RF/IF TEST MONITOR TOP ASSEMBLY	56232	1	PAOLD	
19−16	4A32	1526651−301	2	RECEIVER INTERFACE ASSEMBLY	56232	1	PAOLD	
19−17	4TB2	700300	2	BUS BAR ASSEMBLY (56232) (spec dwg 1214663−201)	58467	1	XB	
				(ATTACHING PARTS)				
		MS51957−48	2	SCREW	96906	4	PAOZZ	
		MS35338−137	2	WASHER	96906	4	PAOZZ	
		MS15795−807	2	WASHER	96906	4	PAOZZ	
				− − − − − − − − −				
19−18		1213717−101	2	DOOR	56232	1	XB	
19−19		M39030/3−10N	2	DUMMY LOAD	81349	6	PAOZZ	A
		M39030/3−10N	2	DUMMY LOAD	81349	1	PAOZZ	B
19−20	4/104W202 **	90−855−203	2	CABLE ASSEMBLY, RF, FLEX, SMA (0GP12) (ALT PN R296600−319) (56232) (spec dwg 1213528−203)	57500	1	PAOZZ	
19−21	4/104W203 **	90−855−204	2	CABLE ASSEMBLY, RF, FLEX, SMA (0GP12) (ALT PN R296600−320) (56232) (spec dwg 1213528−204)	57500	1	PAOZZ	
19−22	4/104W204 **	90−855−205	2	CABLE ASSEMBLY, RF, FLEX, SMA (0GP12) (ALT PN R296600−321) (56232) (spec dwg 1213528−205)	57500	1	PAOZZ	

NOTE * : SITE DEPENDENT
NOTE ** : NOT SHOWN

FIGURE AND INDEX NO.	REF DES	PART NUMBER	INDENT	DESCRIPTION	CAGE CODE	QTY PER ASSY	CODES SMR	CODES USABLE ON
19−23	4/104W205 **	90−855−206	2	CABLE ASSEMBLY, RF, FLEX, SMA (0GP12) (ALT PN R296600−322) (56232) (spec dwg 1213528−206)	57500	1	PAOZZ	
19−24	4/104W206 **	90−855−207	2	CABLE ASSEMBLY, RF, FLEX, SMA (0GP12) (ALT PN R296600−323) (56232) (spec dwg 1213528−207)	57500	1	PAOZZ	
19−25	4/104W207 **	90−855−208	2	CABLE ASSEMBLY, RF, FLEX, SMA (0GP12) (ALT PN R296600−324) (56232) (spec dwg 1213528−208)	57500	1	PAOZZ	
19−26	4/104W209 **	90−855−210	2	CABLE ASSEMBLY, RF, FLEX, SMA (0GP12) (ALT PN R296600−326) (56232) (spec dwg 1213528−210)	57500	1	PAOZZ	
19−27	4/104W210 **	90−855−211	2	CABLE ASSEMBLY, RF, FLEX, SMA (0GP12) (ALT PN R296600−327) (56232) (spec dwg 1213528−211)	57500	1	PAOZZ	
19−28	4/104W212 **	90−855−213	2	CABLE ASSEMBLY, RF, FLEX, SMA (0GP12) (ALT PN R296600−329) (56232) (spec dwg 1213528−213)	57500	1	PAOZZ	A
19−29	4/104W213 **	90−855−214	2	CABLE ASSEMBLY, RF, FLEX, SMA (0GP12) (ALT PN R296600−330) (56232) (spec dwg 1213528−214)	57500	1	PAOZZ	A
19−30	4/104W214 **	90−855−215	2	CABLE ASSEMBLY, RF, FLEX, SMA (0GP12) (ALT PN R296600−331) (56232) (spec dwg 1213528−215)	57500	1	PAOZZ	A
19−31	4/104W215 **	90−855−216	2	CABLE ASSEMBLY, RF, FLEX, SMA (0GP12) (ALT PN R296600−332) (56232) (spec dwg 1213528−216)	57500	1	PAOZZ	A
19−32	4/104W216 **	90−855−217	2	CABLE ASSEMBLY, RF, FLEX, SMA (0GP12) (ALT PN R296600−333) (56232) (spec dwg 1213528−217)	57500	1	PAOZZ	A
19−33	4/104W217 **	90−855−218	2	CABLE ASSEMBLY, RF, FLEX, SMA (0GP12) (ALT PN R296600−334) (56232) (spec dwg 1213528−218)	56232	1	PAOZZ	A

NOTE * : SITE DEPENDENT
NOTE ** : NOT SHOWN

FIGURE AND INDEX NO.	REF DES		PART NUMBER	INDENT	DESCRIPTION	CAGE CODE	QTY PER ASSY	CODES SMR	CODES USABLE ON
19−34	4/104W218	**	90−855−219	2	CABLE ASSEMBLY, RF, FLEX, SMA (0GP12) (ALT PN R296600−335) (56232) (spec dwg 1213528−219)	57500	1	PAOZZ	A
19−35	4/104W219	**	90−855−220	2	CABLE ASSEMBLY, RF, FLEX, SMA (0GP12) (ALT PN R296600−336) (56232) (spec dwg 1213528−220)	57500	1	PAOZZ	A
19−36	4/104W221	**	90−855−222	2	CABLE ASSEMBLY, RF, FLEX, SMA (0GP12) (ALT PN R296600−338) (56232) (spec dwg 1213528−222)	57500	1	PAOZZ	
19−37	4/104W300	**	90−863−201	2	CABLE ASSEMBLY, FLEX, TRIAX (56232) (spec dwg 1213531−201)	57500	1	PAOZZ	
19−38	4/104W302	**	90−854−201	2	CABLE ASSEMBLY, TWINAXIAL (56232) (spec dwg 1213529−201)	57500	1	PAOZZ	A
19−39	4/104W303	**	90−854−202	2	CABLE ASSEMBLY, TWINAXIAL (56232) (spec dwg 1213529−202)	57500	1	PAOZZ	
19−40	4/104W304	**	90−854−203	2	CABLE ASSEMBLY, TWINAXIAL (56232) (spec dwg 1213529−203)	57500	1	PAOZZ	A
19−41	4/104W306	**	90−854−204	2	CABLE ASSEMBLY, TWINAXIAL (56232) (spec dwg 1213529−204)	57500	1	PAOZZ	A
19−42	4/104W308	**	90−854−205	2	CABLE ASSEMBLY, TWINAXIAL (56232) (spec dwg 1213529−205)	71468	1	PAOZZ	A
19−43	4/104W309	**	90−854−206	2	CABLE ASSEMBLY, TWINAXIAL (56232) (spec dwg 1213529−206)	57500	1	PAOZZ	A
19−44	4/104W311	**	90−854−208	2	CABLE ASSEMBLY, TWINAXIAL (56232) (spec dwg 1213529−208)	57500	1	PAOZZ	
19−45	4/104W403	**	1213491−301	2	CABLE ASSEMBLY	56232	1	PAOOO	
19−46	4/104W403P1	**	MS3116F14−15S	3	CONNECTOR	96906	1	PAOZZ	
19−47	4/104W403P2	**	DAU−15PF0	3	CONNECTOR (56232) (spec dwg 1218768−202)	71468	1	PAOZZ	
19−48		**	M39029/64−369	3	CONTACT PIN	81349	15	PAOZZ	
19−49		**	MS25036−159	3	TERMINAL LUG	96906	3	PAOZZ	
19−50	4/104W406	**	1213733−301	2	CABLE ASSEMBLY	56232	1	PAOOO	

NOTE * : SITE DEPENDENT
NOTE ** : NOT SHOWN

FIGURE AND INDEX NO.	REF DES	PART NUMBER	INDENT	DESCRIPTION	CAGE CODE	QTY PER ASSY	CODES SMR	CODES USABLE ON
19−51	4/104W406P1 **	DBU−25SF0	3	CONNECTOR RECEPTACLE, ELECTRICAL (56232) (spec dwg 1218767−203)	71468	1	PAOZZ	
19−52	**	030−1953−000	3	CONTACT, SOCKET, ELECTRICAL (56232) (spec dwg 1218765−201)	71468	25	PAOZZ	
19−53	4/104W406P2 **	DBU−25PF0	3	CONNECTOR, ELECTRICAL, PLUG (56232) (spec dwg 1218768−203)	71468	1	PAOZZ	
19−54	**	M39029/64−369	3	CONTACT, PIN	81349	25	PAOZZ	
19−55	4/104W407 **	1213495−301	2	CABLE ASSEMBLY	56232	1	PAOOO	
19−56	4/104W407P1 **	M24308/2−3	3	CONNECTOR	81349	1	PAOZZ	
19−57	4/104W407P2 **	M24308/4−3	3	CONNECTOR	81349	1	PAOZZ	
19−58	4/104W410 **	1213498−301	2	CABLE ASSEMBLY	56232	1	PAOOO	
19−59	4/104W410P1 **	M24308/4−1	3	CONNECTOR	81349	1	PAOZZ	
19−60	4/104W410P2 **	M24308/2−1	3	CONNECTOR	81349	1	PAOZZ	
19−61	**	MS25036−159	3	TERMINAL LUG	96906	7	PAOZZ	
19−62	4/104W500 **	1213506−301	2	CABLE ASSEMBLY	56232	1	PAOOO	
19−63	4/104W500P1 **	M24308/2−1	3	CONNECTOR	81349	1	PAOZZ	
19−64	**	MS25036−159	3	TERMINAL LUG	96906	6	PAOZZ	
19−65	4/104W501 **	1213507−301	2	CABLE ASSEMBLY	56232	1	PAOOO	
19−66	4/104W501P1 **	M24308/2−1	3	CONNECTOR	81349	1	PAOZZ	
19−67	**	MS25036−159	3	TERMINAL LUG	96906	2	PAOZZ	
19−68	4/104W503 **	1213509−301	2	CABLE ASSEMBLY	56232	1	PAOOO	
19−69	4/104W503P1 **	M24308/2−1	3	CONNECTOR	81349	1	PAOZZ	
19−70	**	MS25036−159	3	TERMINAL LUG	96906	3	PAOZZ	
19−71	4/104W504 **	1213510−301	2	CABLE ASSEMBLY	56232	1	PAOOO	
19−72	4/104W504P1 **	M24308/2−1	3	CONNECTOR	81349	1	PAOZZ	
19−73	**	MS25036−159	3	TERMINAL LUG	96906	6	PAOZZ	
19−74	4/104W509 **	1213515−301	2	CABLE ASSEMBLY	56232	1	PAOOO	A
19−75	4/104W509P1 **	M24308/2−1	3	CONNECTOR	81349	1	PAOZZ	A
19−76	**	MS25036−159	3	TERMINAL LUG	96906	3	PAOZZ	
19−77	4/104W510 **	1213516−301	2	CABLE ASSEMBLY	56232	1	PAOOO	A
19−78	4/104W510P1 **	M24308/2−1	3	CONNECTOR	81349	1	PAOZZ	A
19−79	**	MS25036−159	3	TERMINAL LUG	96906	3	PAOZZ	
19−80	4/104W511 **	1213517−301	2	CABLE ASSEMBLY	56232	1	PAOOO	A

NOTE * : SITE DEPENDENT
NOTE ** : NOT SHOWN

FIGURE AND INDEX NO.	REF DES	PART NUMBER	INDENT	DESCRIPTION	CAGE CODE	QTY PER ASSY	CODES SMR	CODES USABLE ON
19−81	4/104W511P1 **	M24308/2−1	3	CONNECTOR	81349	1	PAOZZ	A
19−82	**	MS25036−159	3	TERMINAL LUG	96906	3	PAOZZ	
19−83	4/104W512 **	1213518−301	2	CABLE ASSEMBLY	56232	1	PAOOO	A
19−84	4/104W512P1 **	DEU−9SF0	3	CONNECTOR (56232) (spec dwg 1218767−201)	71468	1	PAOZZ	A
19−85	**	030−1953−000	3	CONTACT, SOCKET, ELECTRICAL (56232) (spec dwg 1218765−201)	71468	9	PAOZZ	
19−86	**	MS25036−159	3	TERMINAL LUG	96906	4	PAOZZ	
19−87	4/104W513 **	1213519−301	2	CABLE ASSEMBLY	56232	1	PAOOO	
19−88	4/104W513P1 **	M24308/2−1	3	CONNECTOR	81349	1	PAOZZ	
19−89	**	MS25036−159	3	TERMINAL LUG	96906	3	PAOZZ	
19−90	4/104W514 **	1213520−301	2	CABLE ASSEMBLY	56232	1	PAOOO	
19−91	4/104W514P1 **	DAU−25SF0	3	CONNECTOR, RECEPTACLE, ELECTRICAL (56232) (spec dwg 1218767−202)	71468	1	PAOZZ	
19−92	**	030−1953−000	3	CONTACT, SOCKET, ELECTRICAL (56232) (spec dwg 1218765−201)	71468	25	PAOZZ	
19−93	**	MS25036−159	3	TERMINAL LUG	96906	6	PAOZZ	
19−94	4/104W515 **	1213521−301	2	CABLE ASSEMBLY	56232	1	PAOOO	
19−95	4/104W515P1 **	M24308/2−1	3	CONNECTOR	81349	1	PAOZZ	
19−96	**	MS25036−159	3	TERMINAL LUG	96906	2	PAOZZ	
19−97		MS35489−107	2	GROMMET	96906	4	PCOZZ	
19−98		MS9349−21	2	CLAMP, LOOP	96906	1	PAOZZ	
19−99	4/104	1218266−101	2	STUD, COUPLER	56232	1	PAOZZ	
19−100	4/104	1218264−101	2	ROD, SUPPORT	56232	1	PAOZZ	
19−101		BC−3	2	UNIVERSAL JOINT (56232) (spec dwg 1218267−201)	00141	1	PAOZZ	
19−102	4Z1N2MP1	121002	2	CLIP, FUSE (56232) (spec dwg 1218215−201)	75915	1	PAOZZ	

USABLE ON CODES

A − BASE PLUS ADDITIONAL INTERFERENCE SUPPRESSION CONFIGURATION

B − BASE CONFIGURATION

NOTE * : SITE DEPENDENT

NOTE ** : NOT SHOWN

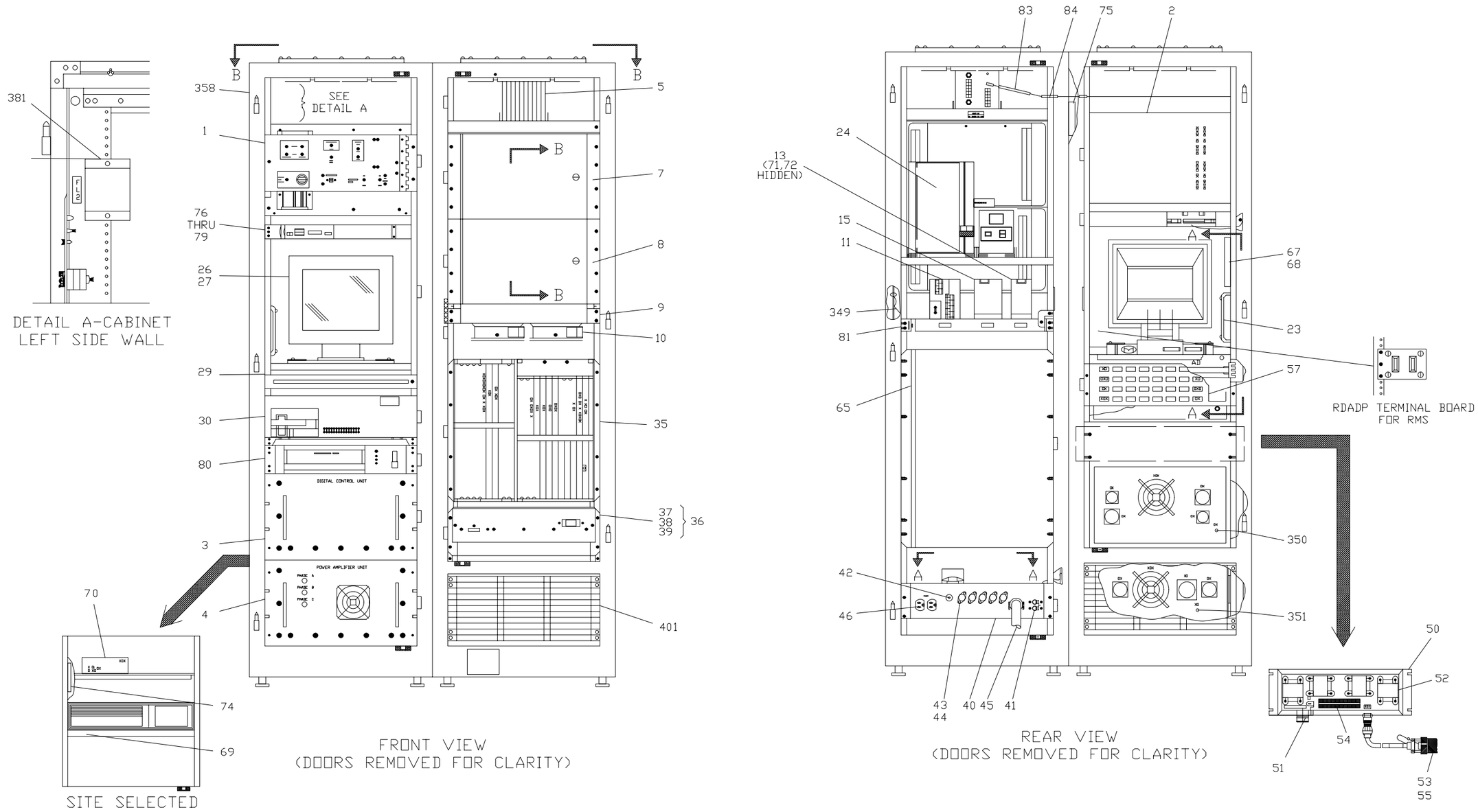

NX1150

FIGURE 20. RDA Data Processor, UD5 (Sheet 1 of 8)

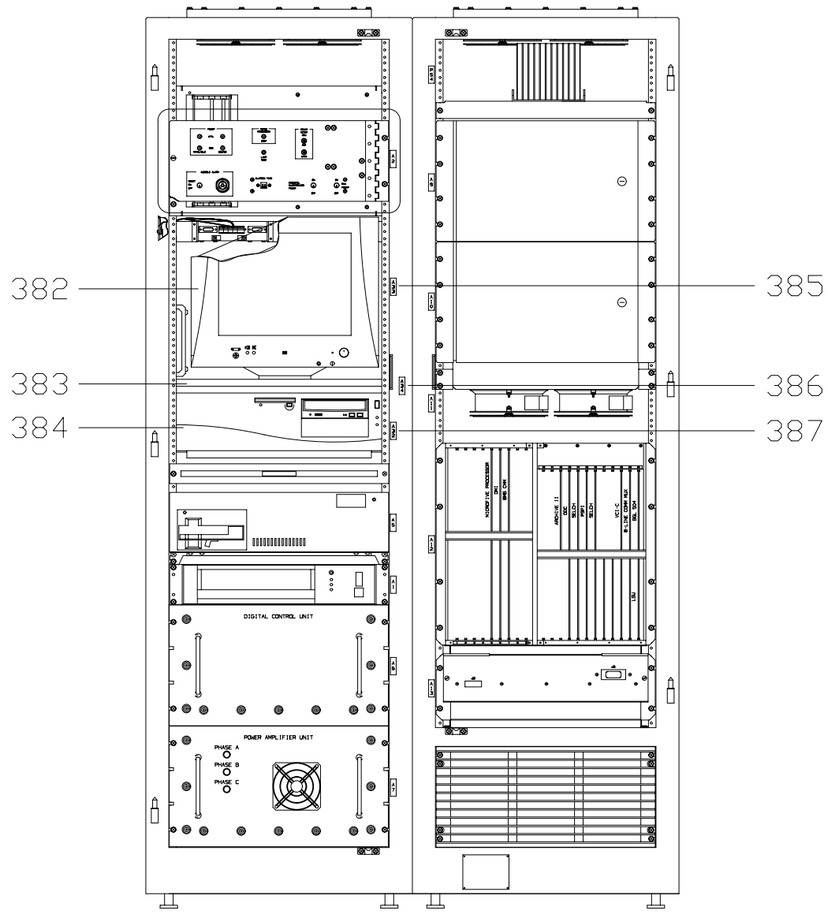

FRONT VIEW
(DOORS REMOVED FOR CLARITY)

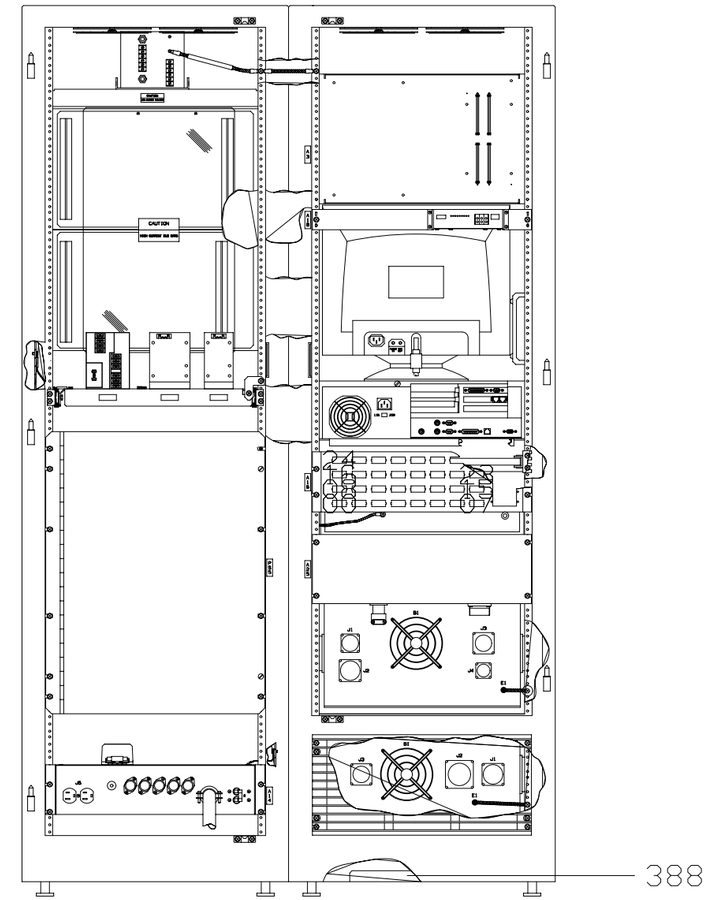

REAR VIEW
(DOORS REMOVED FOR CLARITY)

NX1151

FIGURE 20. RDA Data Processor, UD5 (Sheet 2 of 8)

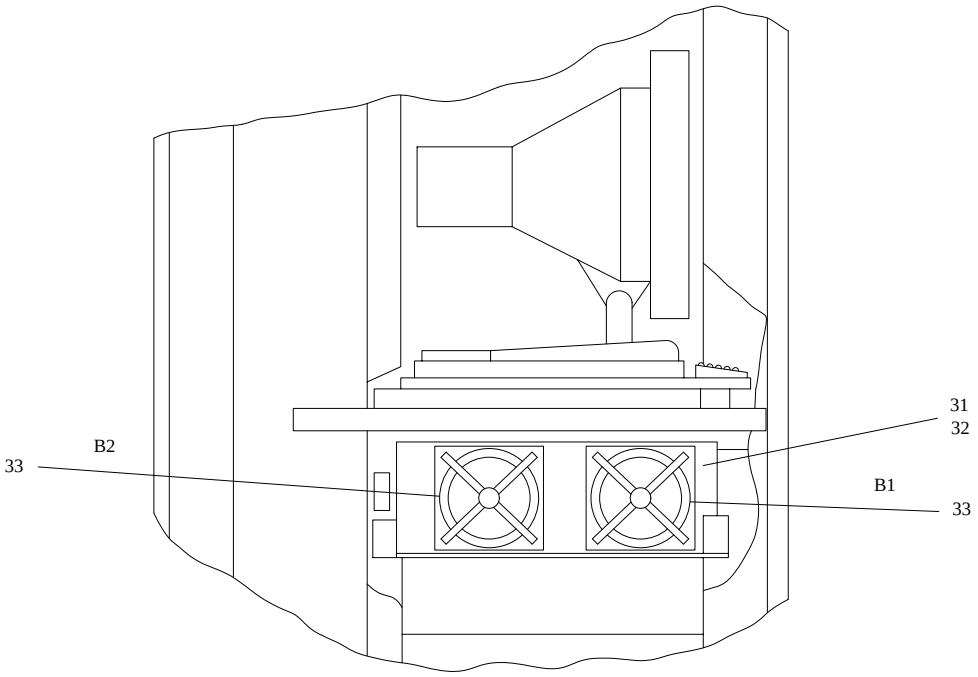

PARTIAL SECTION A−A

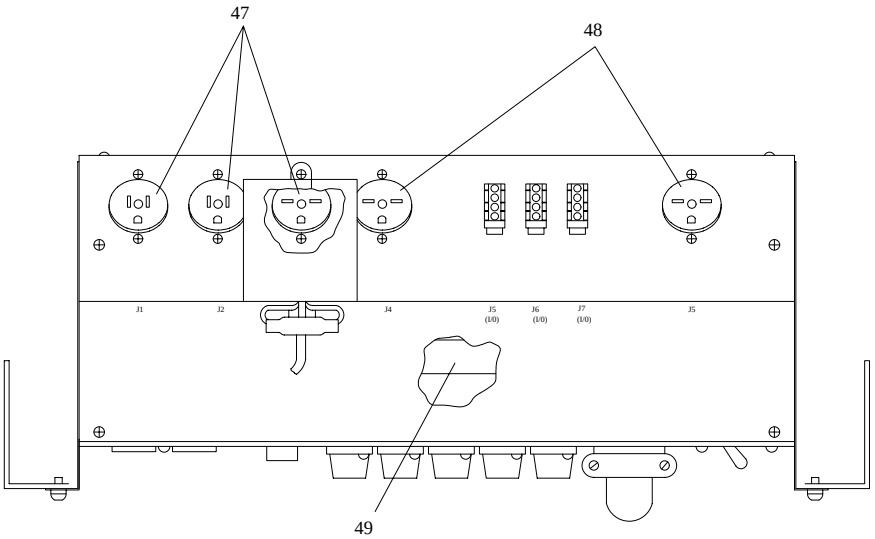

VIEW A−A

NX1152

FIGURE 20. RDA Data Processor, UD5 (Sheet 3 of 8)

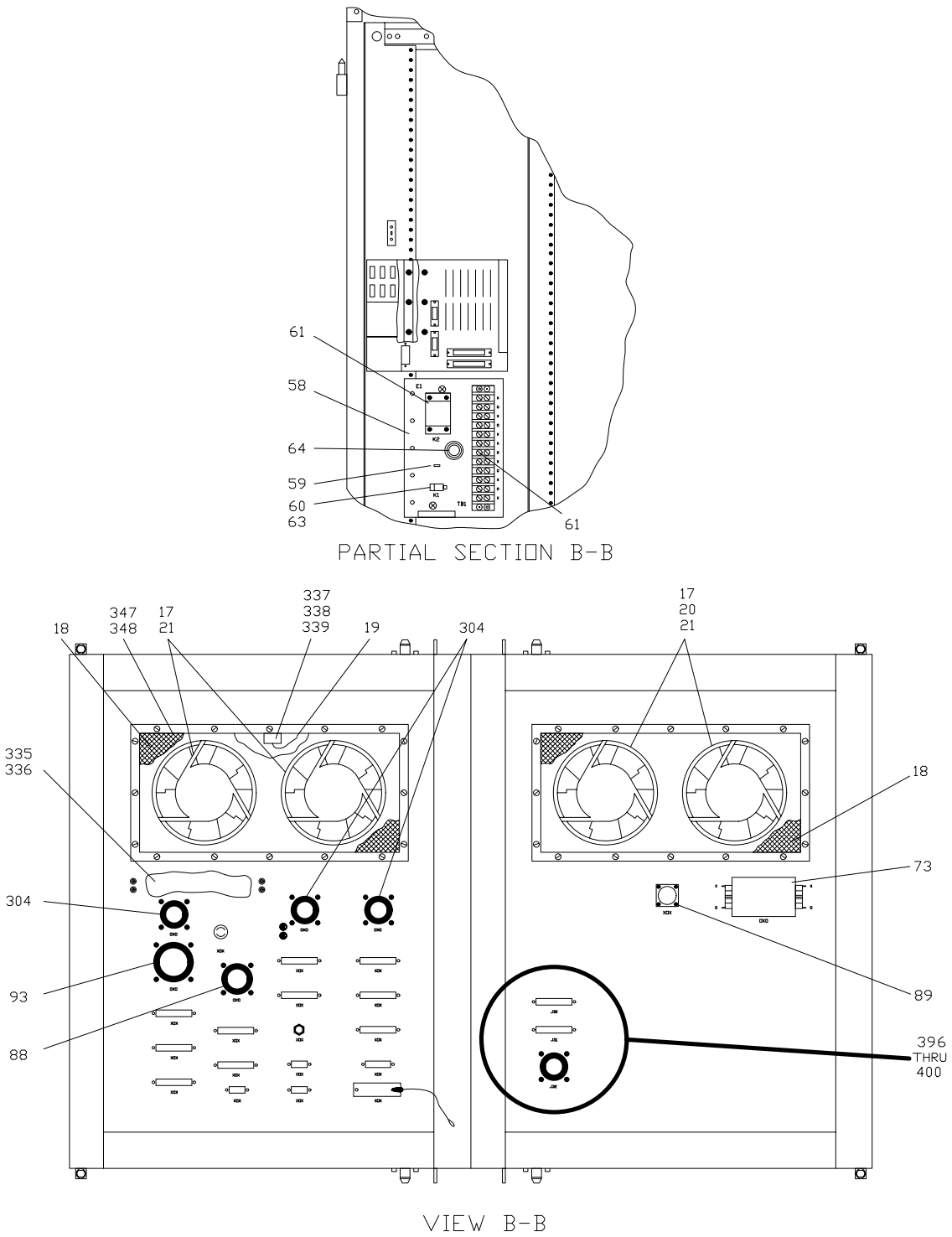

NX1153

FIGURE 20. RDA Data Processor, UD5 (Sheet 4 of 8)

CABLE ASSEMBLIES (NOT SHOWN)

INDEX NO.	REF DES	FROM	TO	USABLE ON CODE
20−19	−	B2−GND B1−GND	B1−GND GND	
20−20	−	B3−GND B4−GND	B4−GND GND	
20−32	5/105A8W1	5A8	5A14J9	
20−85	*5/105W600	P1(A25J1)	J4	
20−90	*5/105W601	P1(A6J2)	J3	
20−94	*5/105W602	P1(A3J4)	J9	
20−96	5/105W604	P1(A3J9)	J10	
20−99	5/105W605	P1(A3J3)	J7	
20−101	5/105W606	P1(A3J2)	J8	
20−103	5/105W610	P1(A10J18)	J20	
20−106	5/105W611	P1(A10J17)	J19	
20−109	5/105W612	P1(A10J16)	J21	
20−112	5/105W613	P1(A10J15)	J18	
20−115	*5/105W614	P1(A9J25) P1(A9J25)	P2(A13A3J3) P2(A12A14J3)	
20−117	*5/105W615	P1(A9J24) P1(A9J24)	P2(A13A3J2) P2(A12A14J2)	
20−120	*5/105W616	P1(A9J26) P1(A9J26)	P2(A13A3J4) P2(A12A14J4)	
20−122	5/105W617	P1(A9J30)	P2(A10J12)	
20−124	5/105W618	P1(A9J31)	P2(A10J13)	
20−126	5/105W619	P1(A9J32)	P2(A10J14)	
20−128	5/105W620	P1(A10J19)	J22	
20−131	5/105W622	P1(A6J1)	P2(A3J7)	
20−134	*5/105W623	P1(A16J0)	P2(A17B)	
20−137	*5/105W625	P1(A6J4)	A2TB1	
20−139	5/105W626	P1(A10J20)	J23	
20−142	5/105W627	P1(A10J21)	J17	
20−145	5/105W628	P1(A3J5)	J5	
20−147	5/105W629	P1(A3J6)	J6	
20−149	*5/105W630	P1(A3J10)	PS1, PS2, PS3	
20−151	5/105W631	P1(A3J8) P1(A3J8)	P2(A16J9) P3(A16J4)	
20−154	*5/105W633	P1(A17A)	J25	
20−159	*5/105W634	P1(A3J1)	A2	

* SITE DEPENDENT

FIGURE 20. RDA Data Processor, UD5 (Sheet 5 of 8)

CABLE ASSEMBLIES (NOT SHOWN)

INDEX NO.	REF DES	FROM	TO	USABLE ON CODE
20−173	5/105W638	P1(A16J1)	P2(A4SES 2−AUX)	
20−176	*5/105W639	P1(A17C)	P2(A4SES 1−E1A)	
20−179	5/105W640	P1(B1J1)	TB4	
20−182	5/105W641	P1(B2J1)	TB4	
20−185	5/105W642	P1(B3J1)	TB5	
20−188	5/105W643	P1(B4J1)	TB5	
20−191	5/105W648	TB1	A2TB1	
20−193	5/105W649	PS1	A2TB1	
20−197	*5/105W660	P1(A3J11)	J12	
20−200	*5/105W661	P1(A3J4)	J13	
20−202	*5/105W663	P1(A16J8)	P2(A3J13)	D,E
20−206	*5/105W664	J15	P1(A3J14)	D,E
20−211	*5W665	J15	P1(A3J14) P2(A19CTL)	D,E
20−218	*5/105W666	P1(A17A1)	P2(A4SES 1−E1A)	D,E
20−221	*5/105W667	P1(A17A2)	P2(A4SES2 2−AUX)	D,E
20−224	*5/105W668	P1(A16J1)	P2(A17C2)	D,E
20−229	*5/105W669	P1(A16J0)	P2(A17C1)	D,E
20−234	*5/105W670	J11	P1(A1J1)	
20−239	5/105W671	P1(A1J2)	J16	
20−241	*5/105W672	P1(A18J1DTE)	P2(A1J1)	
20−247	*5/105W673	J11	5A18P1NETWK	
20−251	*5/105W675	P1(A18J1DTE)	P2(A15J7)	
20−256	*5W680	J28	P1(A19A)	
20−261	*5W681	J26	P1(A17B1)	
20−266	*5W682	J27	P1(A17B2)	
20−274	*5W684	P1(A18J1DTE)	P2(A19−COM)	
20−278	*105W685	P1(A17B1)	P2(A20 PORT 1)	
20−281	*105W686	P1(A17B2)	P2(A20 PORT 2)	
20−284	*105W687	J26	P1(A20 PORT 3)	
20−289	*105W688	J27	P1(A20 PORT 4)	
20−294	*105W689	P1(A20 TRUNK 1)	P2(A21DTE)	
20−297	*105W690	J11	P1(A21 DIAL LINE)	
20−301	5/105W691	A9XA1	A10XA2	

* SITE DEPENDENT

FIGURE 20. RDA Data Processor, UD5 (Sheet 6 of 8)

CABLE ASSEMBLIES (NOT SHOWN)

INDEX NO.	REF DES	FROM	TO	USABLE ON CODE
20−302	5/105W700	TB1,TB3	J1	
20−305	5/105W701	P1(A7J1)	J2	
20−308	*5/105W703	PS4, A11TB1, TB3	J24	
20−310	5/105W704	P5 (J31)	P1(B1), P2(B2) P3(B3), P4(B4)	M
20−311	5/105W704	TB1−1 TB1−2	P1(B1) P2(B2)	N
20−312	5/105W704	TB1−1 TB1−3	P1(B1), P2(B2) P3(B3), P4(B4)	G, E
20−316	*5/105W705	A18PS1	A18TB1−5 A18TB1−6 A18TB1−7	D, E
20−319	5/105W706	P3(J31)	P1(B3), P2(B4)	N
20−322	*5/105W707	J31	A2TB1−2 A2S4−2	D, E
20−326	*5/105W708	A24TB1	FL1/TB1/PS5BUS	D, E
20−329	*5/105W709	J29	FL1	D, E
20−332	5W1	P1(A7J2)	P2(A6J3)	
20−352	−	A9W4E2	A10W4E4	
20−352	−	A9W2E2	A10W2E4	
20−352	−	A9W1E4	A10W1E2	
20−352	−	A9W3E4	A10W3E2	
20−353	−	PS4 (V+), (V−)	A9W3E1, A9W4E5, A10W3E5, A10W4E1	
20−354	−	PS4 (V+), (V−)	A9W1E1, A9W2E5, A10W2E1, A10W1E5	
20−355	−	TB4	TB5	
20−356	−	TB1	TB4	
20−357	−	PS1, PS2, PS3	PS1, PS2, PS3	
20−360	−	A12A21J1	A12AT1J1A	
20−361	−	PS5A1J8	A13J6	
20−362	−	PS5J2	A12A3J5B/A13J5	
20−363	−	PS5J6	A15J1	
20−364	−	PS5J5	A12AT1CONN3	
20−365	5/105W710	PS5J7	A12A19CONN2/ A16J1	
20−366	−	A15J16 A15J17	A16J14 A16J0	

* SITE DEPENDENT

FIGURE 20. RDA Data Processor, UD5 (Sheet 7 of 8)

CABLE ASSEMBLIES (NOT SHOWN)

INDEX NO.	REF DES	FROM	TO	USABLE ON CODE
20−369	−	A12J3	A12CONN1 SLOT 05B (TOP)	
20−369	−	A12J5	A12CONN1 SLOT 05B (BOT)	
20−370	−	A12J2	A12A5CONN3	
20−371	−	A12A20A2CONNA	PS5J9	
20−372	5W711	A5	A12A12CONN4	
20−374	−	A12A19CONN3	A16J2/J4	
20−374	−	A12A19CONN4	A16J8/J9	
20−374	−	A12A19CONN5	A16J10/J11	
20−375	5W108	A12A18J2	A1A1J1	
20−376	−	5A5	5A14J2	
20−377	−	5A5(GND)	CHASSIS GND	
20−378	5A5W1	5A5	A12A12C−4	
20−379	−	A12CONN−0 SLOT 00A	A12CONN−1 SLOT 11A	
20−380	−	PS5A1	A14J5	
20−393	*5/105W900	P1(A16J0)	P2(CP1)	G
20−394	*5/105W901	P1(A16J1)	P2(A35)	G
20−395	*5/105W907	P1(A17−A1)	P2(CP1)	D
20−397	5/105W911	P1(5A16J14)	P2(5J31)	H
20−398	5/105W912	P1(5A16J11)	P2(5J30)	H
20−399	5/105W910	P1(5J32)	P2(5A37J1)	H
20−400	5/105A37W1	P1(5A1J3)	P2(5A37 TB)	H
20−402	5/105W902	P1(5E1)	P2(5/105A32A3TELCO)	G
20−403	5/105W902A	P1(5/105E1)	P2(5/105A38TELCO)	D
20−404	*5/105W692	P1(A3J4)	P2(FL2−J2)	J
20−408	*5/105W693	P1(A3J4)	P2(FL2−J2)	F
20−412	*5/105W602	P1(FL2J1)	P2(J9)	J
20−416	*5/105W661	P1(FL2J1)	J13	F
20−420	*5/105W914	P1(J25)	P2(CP2)	L
20−421	1W900	P1(1CP1)	P2(5E1)	G
20−422	1W900−1	P1(1CP1)	P2(5E1)	D
20−423	1W901	P1(DEMARC)	P2(105E1)	D
20−424	W905	P1(CP1)	P2(32E1)	D
20−425	*5/105W916	P1(A17−A2)	P2(A41)	D

* SITE DEPENDENT

FIGURE 20. RDA Data Processor, UD5 (Sheet 8 of 8)

FIGURE AND INDEX NO.	REF DES	PART NUMBER	INDENT	DESCRIPTION	CAGE CODE	QTY PER ASSY	CODES SMR	CODES USABLE ON
20−	5 *	1214778−XXX	1	RDA DATA PROCESSOR (W/M5 MOD 1222976) (For NHA see FIGURE 2 on Page 2 − 17)	56232	REF	PBFDD	A B C
	5 105 *	1221821−XXX	1	RDA DATA PROCESSOR (For NHA see FIGURE 2 on Page 2 − 17)	56232	REF	PBFDD	B D E
20−1	5A2 *	1213593−XXX	2	PANEL ASSEMBLY, MAINTENANCE/RDA (For breakdown see FIGURE 23 on Page 2 − 256)	56232	1	XC	
				(ATTACHING PARTS)				
		MS51958−62	2	SCREW	96906	2	PAOZZ	
		MS35338−138	2	WASHER	96906	2	PAOZZ	
		MS15795−808	2	WASHER	96906	2	PAOZZ	
				− − − − − − − − −				
20−2	5A3 *	1213458−301	2	DAU PANEL ASSEMBLY (For breakdown see FIGURE 24 on Page 2 − 259)	56232	1	PAODD	A B C
	5A3 105A3 *	1218226−XXX	2	DAU PANEL ASSEMBLY (For breakdown see FIGURE 24 on Page 2 − 259)	56232	1	PAODD	C D E
				(ATTACHING PARTS)				
		MS51958−62	2	SCREW	96906	8	PAOZZ	
		MS35338−138	2	WASHER	96906	8	PAOZZ	
		MS15795−808	2	WASHER	96906	8	PAOZZ	
				− − − − − − − − −				
20−3	5A6 *	2500002−301	2	DIGITAL CONTROL UNIT (For breakdown see FIGURE 26 on Page 2 − 267)	0WY55	1	PBODD	
				(ATTACHING PARTS)				
		MS51958−62	2	SCREW	96906	4	PAOZZ	
		MS35338−138	2	WASHER	96906	4	PAOZZ	
		MS15795−808	2	WASHER	96906	4	PAOZZ	
				− − − − − − − − −				

NOTE * : SITE DEPENDENT

NOTE ** : NOT SHOWN

NOTE *** : REQUISITION HIGHEST REVISION LEVEL NSN MANAGED BY SOURCE OF SUPPLY (SOS) G13 OR S9_

FIGURE AND INDEX NO.	REF DES	PART NUMBER	INDENT	DESCRIPTION	CAGE CODE	QTY PER ASSY	CODES SMR	CODES USABLE ON
20−4	5A7	54636−1003−102	2	PEDESTAL POWER AMPLIFIER UNIT (For breakdown see FIGURE 27 on Page 2 − 270)	1M813	1	PBODD	
				(ATTACHING PARTS)				
		MS51958−62	2	SCREW	96906	4	PAOZZ	
		MS35338−138	2	WASHER	96906	4	PAOZZ	
		MS15795−808	2	WASHER	96906	4	PAOZZ	
				− − − − − − − − −				
20−5	5PS4 105PS4	LRS−58−5−43720	2	POWER SUPPLY ASSEMBLY (56232) (spec dwg 1213675−205)	9T790	1	PAODD	
20−6	5PS4F1 ** 105PS4F1	MDA15	3	FUSE, 250V, 15A	71400	1	PAOZZ	
				(ATTACHING PARTS)				
		MS51957−43	2	SCREW	96906	4	PAOZZ	
		MS35338−137	2	WASHER	96906	4	PAOZZ	
		MS15795−807	2	WASHER	96906	4	PAOZZ	
				− − − − − − − − −				
20−7	5A9 * 105A9	7339350−04	2	PROGRAMMABLE SIGNAL PROCESSOR (For breakdown see FIGURE 28 on Page 2 − 275)	90536	1	XB	
				(ATTACHING PARTS)				
		MS51958−62	2	SCREW	96906	8	PAOZZ	
		MS35338−138	2	WASHER	96906	8	PAOZZ	
		MS15795−808	2	WASHER	96906	8	PAOZZ	
				− − − − − − − − −				
20−8	5A10 * 105A10	7172770−02	2	SIGNAL PROCESSOR, HARDWIRED (For breakdown see FIGURE 29 on Page 2 − 277)	90536	1	XB	A B C
	5A10 * 105A10	7172770−03	2	SIGNAL PROCESSOR, HARDWIRED (For breakdown see FIGURE 29 on Page 2 − 277)	90536	1	XB	D E

NOTE * : SITE DEPENDENT

NOTE ** : NOT SHOWN

NOTE *** : REQUISITION HIGHEST REVISION LEVEL NSN MANAGED BY SOURCE OF SUPPLY (SOS) G13 OR S9_

FIGURE AND INDEX NO.	REF DES	PART NUMBER	INDENT	DESCRIPTION	CAGE CODE	QTY PER ASSY	CODES SMR	CODES USABLE ON
				(ATTACHING PARTS)				
		MS51958−62	2	SCREW	96906	8	PAOZZ	
		MS35338−138	2	WASHER	96906	8	PAOZZ	
		MS15795−808	2	WASHER	96906	8	PAOZZ	
				− − − − − − − − −				
20−9	5A11 105A11	1213597−301	2	COOLING FAN ASSEMBLY, SIGNAL PROCESSOR	56232	1	PAODD	
				(ATTACHING PARTS)				
		MS51958−62	2	SCREW	96906	4	PAOZZ	
		MS35338−138	2	WASHER	96906	4	PAOZZ	
		MS15795−808	2	WASHER	96906	4	PAOZZ	
				− − − − − − − − −				
20−10	5A11B1 5A11B2 105A11B1 105A11B2	028254	3	FAN, TUBEAXIAL, CIRCULAR FRAME (56232) (spec dwg 1213829−201)	5Y921	2	PAOZZ	
				(ATTACHING PARTS)				
		MS51957−32	3	SCREW	96906	8	PAOZZ	
		MS35338−136	3	WASHER	96906	8	PAOZZ	
		MS15795−805	3	WASHER	96906	16	PAOZZ	
		MS35649−264	3	NUT	96906	8	PAOZZ	
				− − − − − − − − −				
20−11	5PS1 105PS1	LRS−55−28−2602 OR LRS−55−28−43720	2	POWER SUPPLY ASSEMBLY (56232) (spec dwg 1213675−215)	9T790	1	PAODD	
20−12	5PS1F1 ** 105PS1F1	MDA15	3	FUSE, 250V	71400	1	PAOZZ	
				(ATTACHING PARTS)				
		MS51957−43	2	SCREW	96906	4	PAOZZ	
		MS35338−137	2	WASHER	96906	4	PAOZZ	
		MS15795−807	2	WASHER	96906	4	PAOZZ	
				− − − − − − − − −				
20−13	5PS2 105PS2	SPS3407	2	POWER SUPPLY ASSEMBLY (56232) (spec dwg 1213675−211)	3L493	1	PAODD	

NOTE * : SITE DEPENDENT

NOTE ** : NOT SHOWN

NOTE *** : REQUISITION HIGHEST REVISION LEVEL NSN MANAGED BY SOURCE OF SUPPLY (SOS) G13 OR S9_

FIGURE AND INDEX NO.	REF DES	PART NUMBER	INDENT	DESCRIPTION	CAGE CODE	QTY PER ASSY	CODES SMR	CODES USABLE ON
20−14	5PS2F2 ** 105PS2F2	313 1A	3	FUSE, 250V	75915	1	PAOZZ	
				(ATTACHING PARTS)				
		MS51958−62	2	SCREW	96906	4	PAOZZ	
		MS35338−138	2	WASHER	96906	4	PAOZZ	
		MS15795−808	2	WASHER	96906	4	PAOZZ	
				− − − − − − − − −				
20−15	5PS3 105PS3	SPS3408	2	POWER SUPPLY ASSEMBLY (56232) (spec dwg 1213675−203)	3L493	1	PAODD	
20−16	5PS3F1 ** 105PS3F1	F02B250V3A	3	FUSE	81349	1	PAOZZ	
				(ATTACHING PARTS)				
		MS51958−62	2	SCREW	96906	4	PAOZZ	
		MS35338−138	2	WASHER	96906	4	PAOZZ	
		MS15795−808	2	WASHER	96906	4	PAOZZ	
				− − − − − − − − −				
20−17	5B1 THRU 5B4 105B1 THRU 105B4	028254	2	FAN, TUBEAXIAL, CIRCULAR FRAME (56232) (spec dwg 1213829−201)	5Y921	4	PAOZZ	
				(ATTACHING PARTS)				
		MS51957−32	2	SCREW	96906	12	PAOZZ	
		MS15795−805	2	WASHER	96906	24	PAOZZ	
		MS35338−136	2	WASHER	96906	12	PAOZZ	
		MS35649−264	2	NUT	96906	12	PAOZZ	
				− − − − − − − − −				
20−18		60−02075	2	FILTER, EMI (56232) (spec dwg 1213832−201)	07700	2	PAOZZ	
20−19		1217081−302	2	HARNESS ASSEMBLY, BLOWER GROUNDING	56232	1	PAOOO	
20−20		1217081−303	2	HARNESS ASSEMBLY, BLOWER GROUNDING	56232	1	PAOOO	

NOTE * : SITE DEPENDENT

NOTE ** : NOT SHOWN

NOTE *** : REQUISITION HIGHEST REVISION LEVEL NSN MANAGED BY SOURCE OF SUPPLY (SOS) G13 OR S9_

FIGURE AND INDEX NO.	REF DES	PART NUMBER	INDENT	DESCRIPTION	CAGE CODE	QTY PER ASSY	CODES SMR	CODES USABLE ON
20−21	5MP4	551199	2	GUARD, FAN IMPELLER (56232) (spec dwg 1213831−201)	5Y921	4	PAOZZ	
				(ATTACHING PARTS)				
		MS51958−68	2	SCREW	96906	32	PAOZZ	
		MS35338−138	2	WASHER	96906	32	PAOZZ	
		MS15795−808	2	WASHER	96906	64	PAOZZ	
		MS35650−304	2	NUT	96906	32	PAOZZ	
				− − − − − − − − −				
20−22	5A17 * **	SW0023A−FFF	2	SWITCH, EMI ABC−25 (63793) (ALT PN DH0625) (56232) (spec dwg 1215185−201)	59951	1	PAOZZ	
20−23	5A17/105A17	SW184A	2	SWITCH, ABC, DUAL (56232) (spec dwg 1222354−201)	59951	1	PAOZZ	D E
20−24	16		2	LEVEL II RECORDER (For breakdown see FIGURE 41 on Page 2 − 338)	0WY55	1	AD	
20−25	** ***	93−AAWF00MXXRXX	2	MICRO5/ES COMPONENTS	30331	1	XC	
20−26	***	17−854F00MXXRXX	3	CABLE, EXTERNAL/CRT, 25 FT	30331	1	PAOOO	
20−27	5A4A1 * ***	27−211F01MXXRXX	3	MONITOR, CDT100	30331	1	PAOLD	
20−28	**	239001 OR 239002	4	FUSE (When replacing fuse, ensure correct fuse is installed − 1 Amp or 2 Amp)	81349	1	PAOZZ	
20−29	5A4A2 * ***	27−212F01MXXRXX	3	KEYBOARD, CDT100 (53073) (ALT PN 598−0012175) (53073) (ALT PN 598−0004322)	30331	1	PAOZZ	
20−30	5A5 105A5 ***	92−390F01MXXRXX	3	SCSI ASSEMBLY (For breakdown see FIGURE 25 on Page 2 − 263)	30331	1	AD	
				(ATTACHING PARTS)				
		MS51958−62	3	SCREW	96906	6	PAOZZ	
		MS35338−138	3	WASHER	96906	6	PAOZZ	

NOTE * : SITE DEPENDENT

NOTE ** : NOT SHOWN

NOTE *** : REQUISITION HIGHEST REVISION LEVEL NSN MANAGED BY SOURCE OF SUPPLY (SOS) G13 OR S9_

FIGURE AND INDEX NO.	REF DES	PART NUMBER	INDENT	DESCRIPTION	CAGE CODE	QTY PER ASSY	CODES SMR	CODES USABLE ON
		MS15795−808	3	WASHER	96906	6	PAOZZ	
				− − − − − − − − −				
20−31	5A8 *** 105A8	93−626F00MXXRXX	3	FAN PANEL ASSEMBLY	30331	1	PAOOO	
				(ATTACHING PARTS)				
		MS51958−62	3	SCREW	96906	4	PAOZZ	
		MS35338−138	3	WASHER	96906	4	PAOZZ	
		MS15795−808	3	WASHER	96906	4	PAOZZ	
				− − − − − − − − −				
20−32	5A8W1 ***	95−579F00MXXRXX	4	CABLE, FAN POWER	30331	1	PAOZZ	
20−33	5A8B1 *** 5A8B2 105A8B1 105A8B2	36−011F00MXXRXX	4	FAN, MUFFIN	30331	2	PAOZZ	
20−34	5A15 * ** ***	35−896F00MXXRXX	3	CIRCUIT CARD ASSEMBLY, CDS PATCH PANEL	30331	1	PAOLD	
				(ATTACHING PARTS)				
		MS51958−63	3	SCREW	96906	3	PAOZZ	
		MS35338−138	3	WASHER	96906	3	PAOZZ	
		MS15795−808	3	WASHER	96906	3	PAOZZ	
				− − − − − − − − −				
20−35	5A12 *** 105A12	92−616F0XMXXRXX	2	M5/ES CHASSIS ASSEMBLY, RDA (For breakdown see FIGURE 30 on Page 2 − 279)	30331	1	PDDOD	
				(ATTACHING PARTS)				
		MS51958−62	2	SCREW	96906	8	PAOZZ	
		MS51958−63	2	SCREW	96906	8	PAOZZ	
		MS35338−138	2	WASHER	96906	8	PAOZZ	
		MS15795−808	2	WASHER	96906	8	PAOZZ	
				− − − − − − − − −				
20−36	5A13 *** 105A13	93−549F00MXXRXX	3	FAN PANEL ASSEMBLY, LOWER	30331	1	XB	
				(ATTACHING PARTS)				
		MS51958−63	3	SCREW	96906	4	PAOZZ	

NOTE * : SITE DEPENDENT

NOTE ** : NOT SHOWN

NOTE *** : REQUISITION HIGHEST REVISION LEVEL NSN MANAGED BY SOURCE OF SUPPLY (SOS) G13 OR S9_

FIGURE AND INDEX NO.	REF DES		PART NUMBER	INDENT	DESCRIPTION	CAGE CODE	QTY PER ASSY	CODES SMR	CODES USABLE ON
			MS35338−138	3	WASHER	96906	4	PAOZZ	
			MS15795−808	3	WASHER	96906	4	PAOZZ	
					− − − − − − − − −				
20−37	5A13A1 105A13A1		184−00016−00	4	FAN PAN (LOWER)	30331	1	PAODD	
20−38	5A13A1A1 105A13A1A1	***	35−881F00MXXRXX	5	FAN SENSOR BOARD	30331	1	PAOLD	
20−39	5A13A1B1 THRU 5A13A1B4 105A13A1B1 THRU 105A13A1B4	***	36−049F00MXXRXX	5	FAN ASSEMBLY	30331	4	PAOZZ	
20−40	5A14 105A14	***	09−144F01MXXRXX	2	POWER DISTRIBUTION PANEL	30331	1	PAODD	
					(ATTACHING PARTS)				
			MS51958−62	2	SCREW	96906	4	PAOZZ	
			MS35338−138	2	WASHER	96906	4	PAOZZ	
			MS15795−808	2	WASHER	96906	4	PAOZZ	
					− − − − − − − − −				
20−41	5A14CB1/2 105A14CB1/2	***	36−022F01MXXRXX	3	CIRCUIT BREAKER, 30A	30331	1	PAOZZ	
					(ATTACHING PARTS)				
		***	16−237F02MXXRXX	3	SCREW, PHILLIPS, NO.6−32 X 1/4 IN. LG.	30331	4	PAOZZ	
		***	16−328F02MXXRXX	3	WASHER, INT TOOTH NO.6	30331	4	PAOZZ	
					− − − − − − − − −				
20−42	5A14CB3 105A14CB3	***	36−038F01MXXRXX	3	CIRCUIT BREAKER, 5A (74193) (ALT PN KD1−5)	30331	1	PAOZZ	
20−43	5A14F1 THRU 5A14F5 105A14F1 THRU 105A14F5	***	WF1814/01−005	3	FUSE, 15A, 300V (30331) (ALT PN 24−071F00MXXRXX)	81348	5	PAOZZ	

NOTE * : SITE DEPENDENT

NOTE ** : NOT SHOWN

NOTE *** : REQUISITION HIGHEST REVISION LEVEL NSN MANAGED BY SOURCE OF SUPPLY (SOS) G13 OR S9_

FIGURE AND INDEX NO.	REF DES		PART NUMBER	INDENT	DESCRIPTION	CAGE CODE	QTY PER ASSY	CODES SMR	CODES USABLE ON
20−44	5A14XF1 THRU 5A14XF5 105A14XF1 THRU 105A14XF5	***	HPF−EE	3	FUSEHOLDER	71400	5	PAOZZ	
20−45		***	26−249F00MXXRXX	3	PLUG, 30A	30331	1	PAOZZ	
20−46	5A14J6 105A14J6	***	26−064F00MXXRXX	3	RECEPTACLE, AC OUTLET	30331	1	PAOZZ	
20−47	5A14J1 THRU 5A14J3	***	26−347F01MXXRXX	3	RECEPTACLE, 3 WIRE, AC/DC, 125V, 15A	30331	3	PAOZZ	
20−48	5A14J4 5A14J5 105A14J4 105A14J5		WC596/168−1	3	RECEPTACLE, 3 WIRE, AC/DC, 250V, 15A	81348	2	PAOZZ	
20−49	5A14LF1 105A14LF1	** ***	24−103F00MXXRXX	3	LINE FILTER	30331	1	PAOZZ	
					(ATTACHING PARTS)				
		***	16−237F02MXXRXX	3	SCREW, PHILLIPS, NO. 6−32 X 1/4 IN. LG.	30331	3	PAOZZ	
		***	16−328F02MXXRXX	3	WASHER, INT TOOTH NO.6	30331	3	PAOZZ	
					− − − − − − − − −				
20−50	5A25 105A25	*	7362721−00	2	CHOKE ASSEMBLY	61830	1	PAODD	
					(ATTACHING PARTS)				
			MS51958−64	2	SCREW	96906	4	PAOZZ	
			MS35338−138	2	WASHER	96906	4	PAOZZ	
			MS15795−808	2	WASHER	96906	4	PAOZZ	
					− − − − − − − − −				
20−51	5A25J1 105A25J1		MS3452W28−9S	3	CONNECTOR	96906	1	PAOZZ	
20−52	5A25L1 THRU 5A25L4	**	C−1939	3	INDUCTOR, CHOKE (90536) (spec dwg 7921289−00)	29525	4	PAOZZ	
					(ATTACHING PARTS)				
			MS51957−47	3	SCREW	96906	16	PAOZZ	
			MS35338−137	3	WASHER	96906	32	PAOZZ	

NOTE * : SITE DEPENDENT

NOTE ** : NOT SHOWN

NOTE *** : REQUISITION HIGHEST REVISION LEVEL NSN MANAGED BY SOURCE OF SUPPLY (SOS) G13 OR S9_

FIGURE AND INDEX NO.	REF DES	PART NUMBER	INDENT	DESCRIPTION	CAGE CODE	QTY PER ASSY	CODES SMR	CODES USABLE ON
		MS15795−807	3	WASHER	96906	16	PAOZZ	
		MS35649−284	3	NUT	96906	16	PAOZZ	
				− − − − − − − − −				
20−53	5A25P1	MS3406D28−9P	3	CONNECTOR	96906	1	PAOZZ	
20−54	5A25TB1	39TB8F	3	TERMINAL BOARD, BARRIER TYPE	81349	1	PAOZZ	
20−55		M85049/52−1−28W	3	CONNECTOR ACCESSORIES	81349	1	PAOZZ	
20−56	**	MS25036−153	3	TERMINAL LUG	96906	16	PAOZZ	
20−57	5A16 * ***	14−127F00MXXRXX	2	CONVENIENCE PANEL	30331	1	XC	
				(ATTACHING PARTS)				
		MS51958−62	2	SCREW	96906	4	PAOZZ	
		MS35338−138	2	WASHER	96906	4	PAOZZ	
		MS15795−808	2	WASHER	96906	4	PAOZZ	
				− − − − − − − − −				
20−58	5A24 **	1223763−301	2	RELAY ASSEMBLY	56232	1	XB	
				(ATTACHING PARTS)				
		MS51957−15	2	SCREW	96906	2	PAOZZ	
		MS35338−135	2	WASHER	96906	2	PAOZZ	
		MS15795−803	2	WASHER	96906	2	PAOZZ	
				− − − − − − − − −				
20−59	5A24CR1	JANTX1N649−1	3	SEMICONDUCTOR DEVICE, DIODE	81349	1	PAOZZ	
20−60	5A24K1	M39016/6−147M	3	RELAY	81349	1	PAOZZ	
20−61	5A24K2	MS27418−2C	3	RELAY	96906	1	PAOZZ	
				(ATTACHING PARTS)				
		MS51957−29	3	SCREW	96906	4	PAOZZ	
		MS35338−136	3	WASHER	96906	4	PAOZZ	
		MS15795−805	3	WASHER	96906	8	PAOZZ	
		MS35649−264	3	NUT	96906	4	PAOZZ	
				− − − − − − − − −				
20−62	5A24TB1 **	39TB12F	3	TERMINAL BOARD	81349	1	PAOZZ	

NOTE * : SITE DEPENDENT

NOTE ** : NOT SHOWN

NOTE *** : REQUISITION HIGHEST REVISION LEVEL NSN MANAGED BY SOURCE OF SUPPLY (SOS) G13 OR S9_

FIGURE AND INDEX NO.	REF DES	PART NUMBER	INDENT	DESCRIPTION	CAGE CODE	QTY PER ASSY	CODES SMR	CODES USABLE ON
				(ATTACHING PARTS)				
		MS51958−66	3	SCREW	96906	4	PAOZZ	
		MS35338−138	3	WASHER	96906	4	PAOZZ	
		MS15795−808	3	WASHER	96906	4	PAOZZ	
		NAS1831C6E20	3	POST	80205	2	PAOZZ	
				− − − − − − − − −				
20−63	5A24XK1	HRCW−41JT3	3	SOCKET, RELAY (56232) (spec dwg 339222−3)	91663	1	PAOZZ	
20−64		MS35489−46X	3	GROMMET	96906	1	PAOZZ	
20−65	5PS5 ***	93−AAYF00MXXRXX	2	SWINGOUT POWER SUBSYSTEM (For breakdown see FIGURE 21 on Page 2 − 251)	30331	1	PAODD	
				(ATTACHING PARTS)				
		MS51958−63	2	SCREW	96906	10	PAOZZ	
		MS35338−138	2	WASHER	96906	10	PAOZZ	
		MS15795−808	2	WASHER	96906	10	PAOZZ	
				− − − − − − − − −				
20−66	5A19 **	1222352−201	2	A/B SWITCH W/POWER SUPPLY	56232	1	PAOZZ	D
20−67	5A19A1	K−AB−T1	2	SWITCH, AUTOMATIC, A/B DATA ASSEMBLY (56232) (spec dwg 1222352−202)	65752	1	XB	D
20−68	5A19PS1	K−AB−T1−PS1	3	POWER SUPPLY (56232) (spec dwg 1222352−203)	65752	1	PAOZZ	D
20−69	105A20	1223120−201	2	STATISTICAL MULTIPLEXER, 10 CHANNEL (INSTALLATION KIT IS PN 4610−01)	57691	1	XA	E
	105A20A1	4600−02	3	10 CHANNEL STAT MUX (56232) (spec dwg 1223120−202)	57691	1	PAOLD	E
	105A20A2	4610−01	3	RACK MOUNTING KIT	57691	1	XB	E
20−70	105A21	21055	2	DATA MODEM, STANDALONE (56232) (spec dwg 1219739−201)	0BF49	1	PAODD	D
20−71	5K1 * **	MS27401−36M	2	RELAY	96906	1	PAOZZ	D E

NOTE * : SITE DEPENDENT

NOTE ** : NOT SHOWN

NOTE *** : REQUISITION HIGHEST REVISION LEVEL NSN MANAGED BY SOURCE OF SUPPLY (SOS) G13 OR S9_

FIGURE AND INDEX NO.	REF DES	PART NUMBER	INDENT	DESCRIPTION	CAGE CODE	QTY PER ASSY	CODES SMR	CODES USABLE ON
20−72	5R1 * **	RER50F3R01M	2	RESISTOR	81349	1	PAOZZ	D E
20−73	5FL1 *	6EQ1	2	FILTER, POWER LINE (13619) (ALT PN RF14326) (56232) (spec dwg 1219742−201)	05245	1	PAOZZ	D E
20−74	5J30 *	1218758−101	2	POWER STRIP ASSEMBLY, MODIFIED	56232	1	PAOZZ	D E
20−75	5J31 *	1223761−301	2	POWER STRIP ASSEMBLY	56232	2	PAOZZ	D E
20−76	5A18	1222301−201	2	CHANNEL SERVICE UNIT ASSEMBLY	56232	1	XA	D K
				(ATTACHING PARTS)				
		MS51958−63	2	SCREW	96906	2	PAOZZ	
		MS35338−138	2	WASHER	96906	2	PAOZZ	
		MS15795−808	2	WASHER	96906	2	PAOZZ	
				− − − − − − − − −				
20−77	5A18A1	F−1544−200B−11	3	CHANNEL SERVICE UNIT (56232) (spec dwg 1222301−202)	0R582	1	PAOLD	D K
20−78	5A18PS1	30−00087	3	CONVERTER, AC−DC (56232) (spec dwg 1222301−204)	0R582	1	PAOZZ	D K
20−79	5A18MP1	8−1544−RM−1	3	RACKMOUNT (56232) (spec dwg 1222301−203)	0R582	1	PAOZZ	D K
20−80	5A1 *	1222416−XXX	2	VME ASSEMBLY, RDA (For breakdown see FIGURE 22 on Page 2 − 253)	56232	1	AO	
				(ATTACHING PARTS)				
		MS51958−63	2	SCREW	96906	4	PAOZZ	
		MS35338−138	2	WASHER	96906	4	PAOZZ	
		MS15795−808	2	WASHER	96906	4	PAOZZ	
				− − − − − − − − −				
20−81		C−300S−10	2	SLIDE, DRAWER, EXTENSION (Consists of 2 identical slides plus mounting hardware) (56232) (spec dwg 1213933−201)	93876	1	PAOZZ	

NOTE * : SITE DEPENDENT

NOTE ** : NOT SHOWN

NOTE *** : REQUISITION HIGHEST REVISION LEVEL NSN MANAGED BY SOURCE OF SUPPLY (SOS) G13 OR S9_

FIGURE AND INDEX NO.	REF DES	PART NUMBER	INDENT	DESCRIPTION	CAGE CODE	QTY PER ASSY	CODES SMR	CODES USABLE ON
20−82	21MP8 **	C−300S−20	2	DRAWER, SLIDE (Consists of 2 identical slides plus mounting hardware) (56232) (spec dwg 1213933−202)	98376	1	PAOZZ	
20−83		1217074−312	2	GROUND STRAP	56232	1	PAOZZ	
20−84		1217074−311	2	GROUND STRAP	56232	1	PAOZZ	
				(ATTACHING PARTS)				
		MS51958−63	2	SCREW	96906	2	PAOZZ	
		MS35338−138	2	WASHER	96906	2	PAOZZ	
		MS15795−808	2	WASHER	96906	2	PAOZZ	
				− − − − − − − − −				
20−85	5/105W600 * **	1213562−302	2	CABLE ASSEMBLY	56232	1	PAOOO	
20−86	5/105W600P1 **	MS3406D28−9P	3	CONNECTOR	96906	1	PAOZZ	
20−87	5/105W600J4 **	MS3406D28−9S	3	CONNECTOR	96906	1	PAOZZ	
20−88		10−40450−28S	2	GASKET, EMI (56232) (spec dwg 1217076−210)	77820	1	PAOZZ	
20−89		10−40450−18S	2	GASKET, EMI (56232) (spec dwg 1217076−206)	77820	1	PAOZZ	D E
20−90	5/105W601 * **	1213563−301	2	CABLE ASSEMBLY	56232	1	PAOOO	
20−91	5/105W601P1 **	MS3406D36−10P	3	CONNECTOR	96906	1	PAOZZ	
20−92	5/105W601J3 **	MS3406D36−10S	3	CONNECTOR	96906	1	PAOZZ	
20−93		10−40450−36S	2	GASKET, EMI (56232) (spec dwg 1217076−212)	77820	1	PAOZZ	
20−94	5/105W602 * **	1213564−301	2	CABLE ASSEMBLY	56232	1	PAOOO	A B C D
20−95	5/105W602P1 ** 5/105W602J9	M24308/4−4	3	CONNECTOR	81349	2	PAOZZ	A B C D
20−96	5/105W604 **	1213566−301	2	CABLE ASSEMBLY	56232	1	PAOOO	
20−97	5/105W604P1 **	M24308/4−3	3	CONNECTOR	81349	1	PAOZZ	
20−98	5/105W604J10 **	M24308/2−2	3	CONNECTOR	81349	1	PAOZZ	
20−99	5/105W605 **	1213567−301	2	CABLE ASSEMBLY	56232	1	PAOOO	

NOTE * : SITE DEPENDENT

NOTE ** : NOT SHOWN

NOTE *** : REQUISITION HIGHEST REVISION LEVEL NSN MANAGED BY SOURCE OF SUPPLY (SOS) G13 OR S9_

FIGURE AND INDEX NO.	REF DES	PART NUMBER	INDENT	DESCRIPTION	CAGE CODE	QTY PER ASSY	CODES SMR	CODES USABLE ON
20−100	5/105W605P1 ** 5/105W605J7	M24308/4−4	3	CONNECTOR	81349	2	PAOZZ	
20−101	5/105W606 **	1213568−301	2	CABLE ASSEMBLY	56232	1	PAOOO	
20−102	5/105W606P1 ** 5/105W606J7	M24308/4−4	3	CONNECTOR	81349	2	PAOZZ	
20−103	5/105W610 **	1213570−301	2	CABLE ASSEMBLY	56232	1	PAOOO	
20−104	5/105W610P1 **	M83503/7−09	3	CONNECTOR	81349	1	PAOZZ	
20−105	5/105W610J20 **	841−17−DCFR−A37P	3	CONNECTOR, D−SUB, 1DC (56232) (spec dwg 1219749−204)	02660	1	PAOZZ	
20−106	5/105W611 **	1213570−302	2	CABLE ASSEMBLY	56232	1	PAOOO	
20−107	5/105W611P1 **	M83503/7−09	3	CONNECTOR	81349	1	PAOZZ	
20−108	5/105W611J19 **	841−17−DCFR−A37P	3	CONNECTOR, D−SUB, 1DC (56232) (spec dwg 1219749−204)	02660	1	PAOZZ	
20−109	5/105W612 **	1213572−301	2	CABLE ASSEMBLY	56232	1	PAOOO	
20−110	5/105W612P1 **	M83503/7−09	3	CONNECTOR	81349	1	PAOZZ	
20−111	5/105W612J21 **	841−17−DCFR−A37S	3	CONNECTOR, SUBMIN (56232) (spec dwg 1219748−204)	02660	1	PAOZZ	
20−112	5/105W613 **	1213573−301	2	CABLE ASSEMBLY	56232	1	PAOOO	
20−113	5/105W613P1 **	M83503/7−10	3	CONNECTOR	81349	1	PAOZZ	
20−114	5/105W613J18 **	841−17−DCFR−A37S	3	CONNECTOR, SUBMIN (56232) (spec dwg 1219748−204)	02660	1	PAOZZ	
20−115	5/105W614 * **	1213574−XXX	2	CABLE ASSEMBLY	56232	1	PAOOO	
20−116	5/105W614P1 * 5/105W614P2 **	M83503/7−10	3	CONNECTOR	81349	2	PAOZZ	
20−117	5/105W615 * **	1213574−302	2	CABLE ASSEMBLY	56232	1	PAOOO	
20−118	5/105W615P1 * **	M83503/7−10	3	CONNECTOR	81349	1	PAOZZ	
20−119	5/105W615P2 * **	65057−007	3	CONNECTOR (56232) (spec dwg 1213943−201)	22526	1	PAOZZ	
20−120	5/105W616 * **	1213577−XXX	2	CABLE ASSEMBLY	56232	1	PAOOO	

NOTE * : SITE DEPENDENT

NOTE ** : NOT SHOWN

NOTE *** : REQUISITION HIGHEST REVISION LEVEL NSN MANAGED BY SOURCE OF SUPPLY (SOS) G13 OR S9_

FIGURE AND INDEX NO.	REF DES	PART NUMBER	INDENT	DESCRIPTION	CAGE CODE	QTY PER ASSY	CODES SMR	CODES USABLE ON
20−121	5/105W616P1 * 5/105W616P2 **	M83503/7−10	3	CONNECTOR	81349	2	PAOZZ	
20−122	5/105W617 **	7180730−00	2	CABLE ASSEMBLY	90536	1	PAOZZ	
20−123	5/105W617P1 ** 5/105W617P2	M83503/7−10	3	CONNECTOR	81349	2	PAOZZ	
20−124	5/105W618 **	7180730−01	2	CABLE ASSEMBLY	90536	1	PAOZZ	
20−125	5/105W618P1 ** 5/105W618P2	M83503/7−10	3	CONNECTOR	81349	2	PAOZZ	
20−126	5/105W619 **	7180730−03	2	CABLE ASSEMBLY	90536	1	PAOZZ	
20−127	5/105W619P1 ** 5/105W619P2	M83503/7−10	3	CONNECTOR	81349	2	PAOZZ	
20−128	5/105W620 **	1213580−301	2	CABLE ASSEMBLY	56232	1	PAOOO	
20−129	5/105W620P1 **	M83503/7−09	3	CONNECTOR	81349	1	PAOZZ	
20−130	5/105W620J22 **	841−17−DCFR−A37P	3	CONNECTOR, D−SUB, 1DC (56232) (spec dwg 1219749−204)	02660	1	PAOZZ	
20−131	5/105W622 **	1213582−301	2	CABLE ASSEMBLY	56232	1	PAOOO	
20−132	5/105W622P1 **	MS3406D28−15P	3	CONNECTOR	96906	1	PAOZZ	
20−133	5/105W622P2 **	M24308/4−3	3	CONNECTOR	81349	1	PAOZZ	
20−134	5/105W623 * **	1214756−303	2	CABLE ASSEMBLY	56232	1	PAOOO	
20−135	5/105W623P1 * **	DAU−15SF0	3	CONNECTOR, RECEPTACLE, ELECTRICAL (56232) (spec dwg 1218767−202)	71468	1	PAOZZ	
20−136	5/105W623P2 * **	DBU−25PF0	3	CONNECTOR, PLUG, ELECTRICAL (56232) (spec dwg 1218768−203)	71468	1	PAOZZ	
20−137	5/105W625 * **	1213585−301	2	CABLE ASSEMBLY	56232	1	PAOZZ	
20−138	5/105W625P1 * **	MS3406D20−4S	3	CONNECTOR	96906	1	PAOZZ	
20−139	5/105W626 **	1213586−301	2	CABLE ASSEMBLY	56232	1	PAOOO	
20−140	5/105W626P1 **	102387−4	3	CONNECTOR (56232) (spec dwg 1217062−201)	00779	1	PAOZZ	
20−141	5/105W626J23 **	M24308/2−3	3	CONNECTOR	81349	1	PAOZZ	

NOTE * : SITE DEPENDENT

NOTE ** : NOT SHOWN

NOTE *** : REQUISITION HIGHEST REVISION LEVEL NSN MANAGED BY SOURCE OF SUPPLY (SOS) G13 OR S9_

FIGURE AND INDEX NO.	REF DES	PART NUMBER	INDENT	DESCRIPTION	CAGE CODE	QTY PER ASSY	CODES SMR	CODES USABLE ON
20−142	5/105W627 **	1213590−301	2	CABLE ASSEMBLY	56232	1	PAOOO	A B C D
20−143	5/105W627P1 **	102387−4	3	CONNECTOR (56232) (spec dwg 1217062−201)	00779	1	PAOZZ	A B C D
20−144	5/105W627J17 **	M39012/19−0015	3	CONNECTOR	81349	1	PAOZZ	A B C D
20−145	5/105W628 **	1213503−301	2	CABLE ASSEMBLY	56232	1	PAOOO	
20−146	5/105W628P1 ** 5/105W628J5	M24308/4−5	3	CONNECTOR	81349	2	PAOZZ	
20−147	5/105W629 **	1213504−301	2	CABLE ASSEMBLY	56232	1	PAOOO	
20−148	5/105W629P1 ** 5/105W629J6	M24308/4−5	3	CONNECTOR	81349	2	PAOZZ	
20−149	5/105W630 * **	1213524−302 OR 1213524−303	2	CABLE ASSEMBLY	56232	1	PAOOO	
20−150	5/105W630P1 **	M24308/2−4	3	CONNECTOR	81349	1	PAOZZ	
20−151	5/105W631 **	1213525−301	2	CABLE ASSEMBLY	56232	1	PAOOO	
20−152	5/105W631P1 **	M24308/4−3	3	CONNECTOR	81349	1	PAOZZ	
20−153	5/105W631P2 ** 5/105W631P3	M24308/2−2	3	CONNECTOR	81349	2	PAOZZ	
20−154	5/105W633 * **	1221220−301	2	CABLE ASSEMBLY	56232	1	PAOOO	B C D E
20−155	5/105W633J25 **	DBU−25PF0	3	CONNECTOR, PLUG ELECTRICAL (56232) (spec dwg 1218768−203)	71468	1	PAOZZ	B C D E
20−156	5/105W633P1 **	DDU−50PF0	3	CONNECTOR, PLUG ELECTRICAL (56232) (spec dwg 1218768−205)	71468	1	PAOZZ	B C D E

NOTE * : SITE DEPENDENT

NOTE ** : NOT SHOWN

NOTE *** : REQUISITION HIGHEST REVISION LEVEL NSN MANAGED BY SOURCE OF SUPPLY (SOS) G13 OR S9_

FIGURE AND INDEX NO.	REF DES	PART NUMBER	INDENT	DESCRIPTION	CAGE CODE	QTY PER ASSY	CODES SMR	CODES USABLE ON
20−157	**	17−1657−25	3	BACKSHELL, D−SUB, RFI/EMI (38250) (ALT PN C88000203) (56232) (spec dwg 1218764−203)	02660	1	PAOZZ	B C D E
20−158	**	C88144040	3	BACKSHELL, EMI/RFI, D−SUB (56232) (spec dwg 1218779−204)	38250	1	PAOZZ	B C D E
20−159	5/105W634 * **	1213502−301	2	CABLE ASSEMBLY	56232	1	PAOOO	
20−160	5/105W634P1 **	DBU−25PF0	3	CONNECTOR, RECEPTACLE, ELECTRICAL (56232) (spec dwg 1218768−203)	71468	1	PAOZZ	
20−161	5/105W635 * **	12135677−301	2	CABLE ASSEMBLY	56232	1	PAOOO	
20−162	5/105W635P1 **	DAU−15SF0	3	CONNECTOR, RECEPTACLE, ELECTRICAL (56232) (spec dwg 1218767−202)	71468	1	PAOZZ	
20−163	5/105W635J15 **	DAU−15PF0	3	CONNECTOR, RECEPTACLE, ELECTRICAL (56232) (spec dwg 1218768−202)	71468	1	PAOZZ	
20−164	**	17−1657−15	3	BACKSHELL, D−SUB, RFI/EMI (38250) (ALT PN C88000207) (56232) (spec dwg 1218764−202)	02660	1	PAOZZ	
20−165	5/105W636 * **	12133705−301	2	CABLE ASSEMBLY	56232	1	PAOOO	
20−166	5/105W636P1 **	DAU−SF0	3	CONNECTOR, RECEPTACLE, ELECTRICAL (56232) (spec dwg 1218767−202)	71468	1	PAOZZ	
20−167	5/105W636J11 **	DAU−15PF0	3	CONNECTOR, RECEPTACLE, ELECTRICAL (56232) (spec dwg 1218768−202)	71468	1	PAOZZ	
20−168	**	17−1657−15	3	BACKSHELL, D−SUB, RFI/EMI (38250) (ALT PN C88000207) (56232) (spec dwg 1218764−202)	02660	1	PAOZZ	
20−169	5/105W637 * **	12133705−302	2	CABLE ASSEMBLY	56232	1	PAOOO	
20−170	5/105W637P1 **	DAU−15SF0	3	CONNECTOR, RECEPTACLE, ELECTRICAL (56232) (spec dwg 1218767−202)	71468	1	PAOZZ	

NOTE * : SITE DEPENDENT

NOTE ** : NOT SHOWN

NOTE *** : REQUISITION HIGHEST REVISION LEVEL NSN MANAGED BY SOURCE OF SUPPLY (SOS) G13 OR S9_

FIGURE AND INDEX NO.	REF DES	PART NUMBER	INDENT	DESCRIPTION	CAGE CODE	QTY PER ASSY	CODES SMR	CODES USABLE ON
20−171	5/105W637J16 **	DAU−15PF0	3	CONNECTOR, RECEPTACLE, ELECTRICAL (56232) (spec dwg 1218768−202)	71468	1	PAOZZ	
20−172	**	17−1657−15	3	BACKSHELL, D−SUB, RFI/EMI (38250) (ALT PN C8800027) (56232) (spec dwg 1218764−202)	02660	1	PAOZZ	
20−173	5/105W638 **	1214756−302	2	CABLE ASSEMBLY	56232	1	PAOOO	
20−174	5/105W638P1 **	DAU−15SF0	3	CONNECTOR, RECEPTACLE, ELECTRICAL (56232) (spec dwg 1218767−202)	71468	1	PAOZZ	
20−175	5/105W638P2 **	DBU−25PF0	3	CONNECTOR, PLUG, ELECTRICAL (56232) (spec dwg 1218768−203)	71468	1	PAOZZ	
20−176	5/105W639 * **	1221221−301	2	CABLE ASSEMBLY	56232	1	PAOOO	
20−177	5/105W639P1 ** 5/105W639P2	DBU−25PF0	3	CONNECTOR, PLUG, ELECTRICAL (56232) (spec dwg 1218768−203)	71468	2	PAOZZ	
20−178	**	17−1657−25	3	BACKSHELL, D−SUB, RFI/EMI (38250) (ALT PN C88000203) (56232) (spec dwg 1218764−203)	02660	2	PAOZZ	
20−179	5/105W640 **	1213830−307	2	CABLE ASSEMBLY, CABINET FAN	56232	1	PAOOO	A C
20−180	**	428056	3	CORD ASSEMBLY, ELECTRICAL, POWER (56232) (spec dwg 1214913−201)	5Y921	1	PAOZZ	A C
20−181	**	MS25036−106	3	TERMINAL LUG	96906	2	PAOZZ	A C
20−182	5/105W641 **	1213830−308	2	CABLE ASSEMBLY, CABINET FAN	56232	1	PAOOO	A C
20−183	**	428056	3	CORD ASSEMBLY, ELECTRICAL, POWER (56232) (spec dwg 1214913−201)	5Y921	1	PAOZZ	A C
20−184	**	MS25036−106	3	TERMINAL LUG	96906	2	PAOZZ	A C
20−185	5/105W642 **	1213830−309	2	CABLE ASSEMBLY, CABINET FAN	56232	1	PAOOO	A C

NOTE * : SITE DEPENDENT

NOTE ** : NOT SHOWN

NOTE *** : REQUISITION HIGHEST REVISION LEVEL NSN MANAGED BY SOURCE OF SUPPLY (SOS) G13 OR S9_

FIGURE AND INDEX NO.	REF DES	PART NUMBER	INDENT	DESCRIPTION	CAGE CODE	QTY PER ASSY	CODES SMR	CODES USABLE ON
20−186	**	428056	3	CORD ASSEMBLY, ELECTRICAL, POWER (56232) (spec dwg 1214913−201)	5Y921	1	PAOZZ	A C
20−187	**	MS25036−106	3	TERMINAL LUG	96906	2	PAOZZ	A C
20−188	5/105W643 **	1213830−310	2	CABLE ASSEMBLY, CABINET FAN	56232	1	PAOOO	A C
20−189	**	428056	3	CORD ASSEMBLY, ELECTRICAL, POWER (56232) (spec dwg 1214913−201)	5Y921	1	PAOZZ	A C
20−190	**	MS25036−106	3	TERMINAL LUG	96906	2	PAOZZ	A C
20−191	5/105W648 **	1214925−301	2	CABLE ASSEMBLY	56232	1	PAOOO	
20−192	**	MS25036−156	3	TERMINAL LUG	96906	5	PAOZZ	
20−193	5/105W649 **	1214926−301	2	CABLE ASSEMBLY	56232	1	PAOOO	
20−194	**	MS17143−15	3	TERMINAL LUG	96906	2	PAOZZ	
20−195	**	MS25036−101	3	TERMINAL LUG	96906	1	PAOZZ	
20−196	**	MS25036−156	3	TERMINAL LUG	96906	2	PAOZZ	
20−197	5/105W660 * **	1218225−301	2	CABLE ASSEMBLY	56232	1	PAOOO	
20−198	5/105W660J12* **	M24308/2−5	3	CONNECTOR	81349	1	PAOZZ	
20−199	5/105W660P1 * **	M24308/4−5	3	CONNECTOR	81349	1	PAOZZ	
20−200	5/105W661 * **	1218224−301	2	CABLE ASSEMBLY	56232	1	PAOOO	
20−201	5/105W661P1 * 5/105W661J13 **	M24308/4−5	3	CONNECTOR	81349	2	PAOZZ	
20−202	5/105W663 * **	1222367−301	2	CABLE ASSEMBLY	56232	1	PAOOO	C D E
20−203	5/105W663P1 **	DAU−15SF0	3	CONNECTOR, RECEPTACLE, ELECTRICAL (56232) (spec dwg 1218767−202)	71468	1	PAOZZ	C D E
20−204	5/105W663P2 **	DAU−15PF0	3	CONNECTOR, ELECTRICAL, PLUG (56232) (spec dwg 1218768−202)	71468	1	PAOZZ	C D E

NOTE * : SITE DEPENDENT

NOTE ** : NOT SHOWN

NOTE *** : REQUISITION HIGHEST REVISION LEVEL NSN MANAGED BY SOURCE OF SUPPLY (SOS) G13 OR S9_

FIGURE AND INDEX NO.	REF DES	PART NUMBER	INDENT	DESCRIPTION	CAGE CODE	QTY PER ASSY	CODES SMR	CODES USABLE ON
20−205	**	17−1657−15	3	BACKSHELL, D−SUB, RFI/EMI (38250) (ALT PN C88000207) (56232) (spec dwg 1218764−202)	02660	2	PAOZZ	C D E
20−206	5/105W664 * **	1222368−301	2	CABLE ASSEMBLY	56232	1	PAOOO	C D E
20−207	5/105W664J15 **	DAU−15SF0	3	CONNECTOR, RECEPTACLE, ELECTRICAL (56232) (spec dwg 1218767−202)	71468	1	PAOZZ	C D E
20−208	5/105W664P1 **	DAU−15PF0	3	CONNECTOR, ELECTRICAL, PLUG (56232) (spec dwg 1218768−202)	71468	1	PAOZZ	C D E
20−209	**	17−1657−15	3	BACKSHELL, D−SUB, RFI/EMI (38250) (ALT PN C88000207) (56232) (spec dwg 1218764−202)	02660	1	PAOZZ	C D E
20−210	**	C88611000	3	BACKSHELL, EMI/RFI (56232) (spec dwg 1218780−201)	38250	1	PAOZZ	C D E
20−211	5W665 * **	1223382−301	2	CABLE ASSEMBLY	56232	1	PAOOO	C D E
20−212	5W665J15 **	DAU−15SF0	3	CONNECTOR, RECEPTACLE, ELECTRICAL (56232) (spec dwg 1218767−202)	71468	1	PAOZZ	C D E
20−213	5W665P1 **	DEU−9PF0	3	CONNECTOR, D−SUB, PLUG (56232) (spec dwg 1218768−201)	71468	1	PAOZZ	C D E
20−214	5W665P2 **	DAU−15PF0	3	CONNECTOR, ELECTRICAL, PLUG (56232) (spec dwg 1218768−202)	71468	1	PAOZZ	C D E
20−215	**	C88611001	3	BACKSHELL, EMI, RFI, 15 PIN (56232) (spec dwg 1218780−202)	38250	1	PAOZZ	C D E
20−216	**	17−1657−15	3	BACKSHELL, D−SUB, RFI/EMI (38250) (ALT PN C88000207) (56232) (spec dwg 1218764−202)	02660	1	PAOZZ	C D E
20−217	**	17−1657−09	3	BACKSHELL, RFI/EMI (38250) (ALT PN C88000218) (56232) (spec dwg 1218764−201)	02660	1	PAOZZ	C D E

NOTE * : SITE DEPENDENT

NOTE ** : NOT SHOWN

NOTE *** : REQUISITION HIGHEST REVISION LEVEL NSN MANAGED BY SOURCE OF SUPPLY (SOS) G13 OR S9_

FIGURE AND INDEX NO.	REF DES	PART NUMBER	INDENT	DESCRIPTION	CAGE CODE	QTY PER ASSY	CODES SMR	CODES USABLE ON
20−218	5/105W666 * **	1214871−313	2	CABLE ASSEMBLY	56232	1	PAOOO	C D E
20−219	5/105W666P1 ** 5/105W666P2	DBU−25PF0	3	CONNECTOR, PLUG, ELECTRICAL (56232) (spec dwg 1218768−203)	71468	2	PAOZZ	C D E
20−220	**	17−1657−25	3	BACKSHELL, D−SUB, RFI/EMI (38250) (ALT PN C88000203) (56232) (spec dwg 1218764−203)	02660	2	PAOZZ	C D E
20−221	5/105W667 * **	1223378−301	2	CABLE ASSEMBLY	56232	1	PAOOO	C D E
20−222	5/105W667P1 ** 5/105W667P2	DBU−25PF0	3	CONNECTOR, PLUG, ELECTRICAL (56232) (spec dwg 1218768−203)	71468	2	PAOZZ	C D E
20−223	**	17−1657−25	3	BACKSHELL, D−SUB, RFI/EMI (38250) (ALT PN C88000203) (56232) (spec dwg 1218764−203)	02660	2	PAOZZ	C D E
20−224	5/105W668 * **	1223379−301	2	CABLE ASSEMBLY	56232	1	PAOOO	C D E
20−225	5/105W668P1 **	DBU−25PF0	3	CONNECTOR, PLUG, ELECTRICAL (56232) (spec dwg 1218768−203)	71468	1	PAOZZ	C D E
20−226	5/105W668P2 **	DAU−15SF0	3	CONNECTOR, RECEPTACLE, ELECTRICAL (56232) (spec dwg 1218767−202)	71468	1	PAOZZ	C D E
20−227	**	17−1657−25	3	BACKSHELL, D−SUB, RFI/EMI (38250) (ALT PN C88000203) (56232) (spec dwg 1218764−203)	02660	1	PAOZZ	C D E
20−228	**	17−1657−15	3	BACKSHELL, D−SUB, RFI/EMI (38250) (ALT PN C88000207) (56232) (spec dwg 1218764−202)	02660	1	PAOZZ	C D E
20−229	5/105W669 * **	1223379−302 OR 1223379−303	2	CABLE ASSEMBLY	56232	1	PAOOO	C D E
20−230	5/105W669P1 **	DBU−25PF0	3	CONNECTOR, PLUG, ELECTRICAL (56232) (spec dwg 1218768−203)	71468	1	PAOZZ	C D E

NOTE * : SITE DEPENDENT

NOTE ** : NOT SHOWN

NOTE *** : REQUISITION HIGHEST REVISION LEVEL NSN MANAGED BY SOURCE OF SUPPLY (SOS) G13 OR S9_

FIGURE AND INDEX NO.	REF DES	PART NUMBER	INDENT	DESCRIPTION	CAGE CODE	QTY PER ASSY	CODES SMR	CODES USABLE ON
20−231	5/105W669P2 **	DAU−15SF0	3	CONNECTOR, RECEPTACLE, ELECTRICAL (56232) (spec dwg 1218767−202)	71468	1	PAOZZ	C D E
20−232	**	17−1657−25	3	BACKSHELL, D−SUB, RFI/EMI (38250) (ALT PN C88000203) (56232) (spec dwg 1218764−203)	02660	1	PAOZZ	C D E
20−233	**	17−1657−15	3	BACKSHELL, D−SUB, RFI/EMI (38250) (ALT PN C88000207) (56232) (spec dwg 1218764−202)	02660	1	PAOZZ	C D E
20−234	5/105W670 * **	1221822−301 OR 1223377−301	2	CABLE ASSEMBLY	56232	1	PAOOO	
20−235	5/105W670P1 ** 5/105W670J11	DAU−15PF0	3	CONNECTOR, ELECTRICAL, PLUG (56232) (spec dwg 1218768−202)	71468	2	PAOZZ	
20−236	5/105W670J28 **	DAU−15SF0	3	CONNECTOR, RECEPTACLE, ELECTRICAL (56232) (spec dwg 1218767−202)	71468	1	PAOZZ	
20−237	**	17−1657−15	3	BACKSHELL, D−SUB, RFI/EMI (38250) (ALT PN C88000207) (56232) (spec dwg 1218764−202)	02660	1	PAOZZ	
20−238	**	C88611000	3	BACKSHELL, EMI/RFI (56232) (spec dwg 1218780−201)	38250	1	PAOZZ	
20−239	5/105W671 **	1221822−302	2	CABLE ASSEMBLY	56232	1	PAOOO	
20−240	5/105W671P1 ** 5/105W671J16	DAU−15PF0	3	CONNECTOR, ELECTRICAL, PLUG (56232) (spec dwg 1218768−202)	71468	2	PAOZZ	
20−241	5/105W672 * **	1222328−301	2	CABLE ASSEMBLY	56232	1	PAOOO	D
20−242	5/105W672P1 ** 5/105W672P2	DAU−15PF0	3	CONNECTOR, ELECTRICAL, PLUG (56232) (spec dwg 1218768−202)	71468	2	PAOZZ	D
20−243	**	C88611000	3	BACKSHELL, EMI/RFI (56232) (spec dwg 1218780−201)	38250	1	PAOZZ	D
20−244	**	17−1657−15	3	BACKSHELL, D−SUB, RFI/EMI (38250) (ALT PN C88000207) (56232) (spec dwg 1218764−202)	02660	1	PAOZZ	D

NOTE * : SITE DEPENDENT

NOTE ** : NOT SHOWN

NOTE *** : REQUISITION HIGHEST REVISION LEVEL NSN MANAGED BY SOURCE OF SUPPLY (SOS) G13 OR S9_

FIGURE AND INDEX NO.	REF DES	PART NUMBER	INDENT	DESCRIPTION	CAGE CODE	QTY PER ASSY	CODES SMR	CODES USABLE ON
20−245	**	85062−01	3	CONNECTOR ACCESSORIES	14933	1	PAOZZ	D
20−246	**	M39029/64−369	3	CONTACT, PIN	81349	12	PAOZZ	D
20−247	5/105W673 * **	1222329−301	2	CABLE ASSEMBLY	56232	1	PAOOO	D E
20−248	5/105W673J11 **	DAU−15PF0	3	CONNECTOR, ELECTRICAL, PLUG (56232) (spec dwg 1218768−202)	71468	1	PAOZZ	D E
20−249	5/105W673P1 **	DAU−15SF0	3	CONNECTOR, RECEPTACLE, ELECTRICAL (56232) (spec dwg 1218767−202)	71468	1	PAOZZ	D E
20−250	**	C88611000	3	BACKSHELL, EMI/RFI (56232) (spec dwg 1218780−201)	38250	2	PAOZZ	D E
20−251	5/105W675 * **	1222327−301	2	CABLE ASSEMBLY	56232	1	PAOOO	A C
20−252	5/105W675P1 **	DAU−15PF0	3	CONNECTOR, ELECTRICAL, PLUG (56232) (spec dwg 1218768−202)	71468	1	PAOZZ	A C
20−253	5/105W675P2 **	DAU−15SF0	3	CONNECTOR, RECEPTACLE, ELECTRICAL (56232) (spec dwg 1218767−202)	71468	1	PAOZZ	A C
20−254	**	C88611000	3	BACKSHELL, EMI/RFI (56232) (spec dwg 1218780−201)	38250	1	PAOZZ	A C
20−255	**	17−1657−15	3	BACKSHELL, D−SUB, RFI/EMI (38250) (ALT PN C88000207) (56232) (spec dwg 1218764−202)	02660	1	PAOZZ	A C
20−256	5W680 * **	1223377−302	2	CABLE ASSEMBLY	56232	1	PAOOO	D E
20−257	5W680J28 **	DAU−15SF0	3	CONNECTOR, RECEPTACLE, ELECTRICAL (56232) (spec dwg 1218767−202)	71468	1	PAOZZ	D E
20−258	5W680P1 **	DAU−15PF0	3	CONNECTOR, ELECTRICAL, PLUG (56232) (spec dwg 1218768−202)	71468	1	PAOZZ	D E
20−259	**	17−1657−15	3	BACKSHELL, D−SUB, RFI/EMI (38250) (ALT PN C88000207) (56232) (spec dwg 1218764−202)	02660	1	PAOZZ	D E
20−260	**	C88611000	3	BACKSHELL, EMI/RFI (56232) (spec dwg 1218780−201)	38250	1	PAOZZ	D E

NOTE * : SITE DEPENDENT

NOTE ** : NOT SHOWN

NOTE *** : REQUISITION HIGHEST REVISION LEVEL NSN MANAGED BY SOURCE OF SUPPLY (SOS) G13 OR S9_

FIGURE AND INDEX NO.	REF DES		PART NUMBER	INDENT	DESCRIPTION	CAGE CODE	QTY PER ASSY	CODES SMR	CODES USABLE ON
20−261	5W681	* **	1223380−301	2	CABLE ASSEMBLY	56232	2	PAOOO	D E
20−262	5W681J26	**	DAU−15SF0	3	CONNECTOR, RECEPTACLE, ELECTRICAL (56232) (spec dwg 1218767−202)	71468	1	PAOZZ	D E
20−263	5W681P1	**	DBU−25PF0	3	CONNECTOR, PLUG, ELECTRICAL (56232) (spec dwg 1218768−203)	71468	1	PAOZZ	D E
20−264		**	17−1657−25	3	BACKSHELL, D−SUB, RFI/EMI (38250) (ALT PN C88000203) (56232) (spec dwg 1218764−203)	02660	1	PAOZZ	D E
20−265		**	C88611000	3	BACKSHELL, EMI/RFI (56232) (spec dwg 1218780−201)	38250	1	PAOZZ	D E
20−266	5W682	* **	1223380−302	2	CABLE ASSEMBLY	56232	2	PAOOO	D E
20−267		**	DAU−15SF0	3	CONNECTOR, RECEPTACLE, ELECTRICAL (56232) (spec dwg 1218767−202)	71468	1	PAOZZ	D E
20−268		**	DBU−25PF0	3	CONNECTOR, PLUG, ELECTRICAL (56232) (spec dwg 1218768−203)	71468	1	PAOZZ	D E
20−269		**	17−1657−25	3	BACKSHELL, D−SUB, RFI/EMI (38250) (ALT PN C88000203) (56232) (spec dwg 1218764−203)	02660	1	PAOZZ	D E
20−270		**	C88611000	3	BACKSHELL, EMI/RFI (56232) (spec dwg 1218780−201)	38250	1	PAOZZ	D E
20−271	5W683	**	1223419−302	2	CABLE ASSEMBLY	56232	1	PAOOO	D E
20−272	5W683P1 5W683P2	**	DAU−15PF0	3	CONNECTOR, ELECTRICAL, PLUG (56232) (spec dwg 1218768−202)	71468	12	PAOZZ	D E
20−273	5W683P2	**	17−1657−15	3	BACKSHELL, D−SUB, RFI/EMI (38250) (ALT PN C88000207) (56232) (spec dwg 1218764−202)	02660	1	PAOZZ	D E
20−274	5W684	* **	1222328−304	2	CABLE ASSEMBLY	56232	2	PAOOO	D E

NOTE * : SITE DEPENDENT

NOTE ** : NOT SHOWN

NOTE *** : REQUISITION HIGHEST REVISION LEVEL NSN MANAGED BY SOURCE OF SUPPLY (SOS) G13 OR S9_

FIGURE AND INDEX NO.	REF DES	PART NUMBER	INDENT	DESCRIPTION	CAGE CODE	QTY PER ASSY	CODES SMR	CODES USABLE ON
20−275	5W684P1 ** 5W684P2	DAU−15PF0	3	CONNECTOR, ELECTRICAL, PLUG (56232) (spec dwg 1218768−202)	71468	2	PAOZZ	D E
20−276	**	C88611000	3	BACKSHELL, EMI/RFI (56232) (spec dwg 1218780−201)	38250	1	PAOZZ	D E
20−277	**	17−1657−15	3	BACKSHELL, D−SUB, RFI/EMI (38250) (ALT PN C88000207) (56232) (spec dwg 1218764−202)	02660	1	PAOZZ	D E
20−278	105W685 * **	1223381−301	2	CABLE ASSEMBLY	56232	1	PAOOO	D E
20−279	105W685P1 ** 105W685P2	DBU−25PF0	3	CONNECTOR, PLUG, ELECTRICAL (56232) (spec dwg 1218768−203)	71468	2	PAOZZ	D E
20−280	**	17−1657−25	3	BACKSHELL, D−SUB, RFI/EMI (38250) (ALT PN C88000203) (56232) (spec dwg 1218764−203)	02660	2	PAOZZ	D E
20−281	105W686 * **	1223381−302	2	CABLE ASSEMBLY	56232	1	PAOOO	D E
20−282	105W686P1 ** 105W686P2	DBU−25PF0	3	CONNECTOR, PLUG, ELECTRICAL (56232) (spec dwg 1218768−203)	71468	2	PAOZZ	D E
20−283	**	17−1657−25	3	BACKSHELL, D−SUB, RFI/EMI (38250) (ALT PN C88000203) (56232) (spec dwg 1218764−203)	02660	2	PAOZZ	D E
20−284	105W687 * **	1223380−303	2	CABLE ASSEMBLY	56232	1	PAOOO	D E
20−285	105W687J26 **	DAU−15SF0	3	CONNECTOR, RECEPTACLE, ELECTRICAL (56232) (spec dwg 1218767−202)	71468	1	PAOZZ	D E
20−286	5/105W687P1 **	DBU−25PF0	3	CONNECTOR, PLUG, ELECTRICAL (56232) (spec dwg 1218768−203)	71468	1	PAOZZ	D E
20−287	**	17−1657−25	3	BACKSHELL, D−SUB, RFI/EMI (38250) (ALT PN C88000203) (56232) (spec dwg 1218764−203)	02660	1	PAOZZ	D E
20−288	**	C88611000	3	BACKSHELL, EMI/RFI (56232) (spec dwg 1218780−201)	38250	1	PAOZZ	D E

NOTE * : SITE DEPENDENT

NOTE ** : NOT SHOWN

NOTE *** : REQUISITION HIGHEST REVISION LEVEL NSN MANAGED BY SOURCE OF SUPPLY (SOS) G13 OR S9_

FIGURE AND INDEX NO.	REF DES		PART NUMBER	INDENT	DESCRIPTION	CAGE CODE	QTY PER ASSY	CODES SMR	CODES USABLE ON
20−289	105W688	* **	1223380−304	2	CABLE ASSEMBLY	56232	1	PAOOO	D E
20−290	105W688J27	**	DAU−15SF0	3	CONNECTOR, RECEPTACLE, ELECTRICAL (56232) (spec dwg 1218767−202)	71468	1	PAOZZ	D E
20−291	105W688P1	**	DBU−25PF0	3	CONNECTOR, PLUG, ELECTRICAL (56232) (spec dwg 1218768−203)	71468	1	PAOZZ	D E
20−292		**	17−1657−25	3	BACKSHELL, D−SUB, RFI/EMI (38250) (ALT PN C88000203) (56232) (spec dwg 1218764−203)	02660	1	PAOZZ	D E
20−293		**	C88611000	3	BACKSHELL, EMI/RFI (56232) (spec dwg 1218780−201)	38250	1	PAOZZ	D E
20−294	105W689	* **	1223383−301	2	CABLE ASSEMBLY	56232	1	PAOOO	D E
20−295	105W689P1 105W689P2	**	DBU−25PF0	3	CONNECTOR, PLUG, ELECTRICAL (56232) (spec dwg 1218768−203)	71468	2	PAOZZ	D E
20−296		**	17−1657−25	3	BACKSHELL, D−SUB, RFI/EMI (38250) (ALT PN C88000203) (56232) (spec dwg 1218764−203)	02660	2	PAOZZ	D E
20−297	105W690	* **	1223384−301	2	CABLE ASSEMBLY	56232	2	PAOOO	D E
20−298	105W690J11	**	DAU−15SF0	3	CONNECTOR, RECEPTACLE, ELECTRICAL (56232) (spec dwg 1218767−202)	71468	1	PAOZZ	D E
20−299	105W690P1	**	5−554739−2	3	TELEPHONE PLUG (56232) (spec dwg 1214488−201)	00779	1	PAOZZ	D E
20−300		**	C88611000	3	BACKSHELL, EMI/RFI (56232) (spec dwg 1218780−201)	38250	1	PAOZZ	D E
20−301	5/105W691	**	7180732−00	2	CABLE ASSEMBLY, 4.8 MHZ CLOCK HSP/PSP	90536	1	PAOZZ	
20−302	5/105W700	**	1213588−301	2	CABLE ASSEMBLY	56232	1	PAOOO	
20−303	5/105W700J1	**	MS3400D24−10P	3	CONNECTOR	96906	1	PAOZZ	
20−304		**	10−40450−24S	2	GASKET, EMI (56232) (spec dwg 1217076−209)	77820	3	PAOZZ	
20−305	5/105W701	**	1213589−301	2	CABLE ASSEMBLY	56232	1	PAOOO	
20−306	5/105W701P1	**	MS3406D24−10S	3	CONNECTOR	96906	1	PAOZZ	

NOTE * : SITE DEPENDENT

NOTE ** : NOT SHOWN

NOTE *** : REQUISITION HIGHEST REVISION LEVEL NSN MANAGED BY SOURCE OF SUPPLY (SOS) G13 OR S9_

FIGURE AND INDEX NO.	REF DES	PART NUMBER	INDENT	DESCRIPTION	CAGE CODE	QTY PER ASSY	CODES SMR	CODES USABLE ON
20−307	5/105W701J2 **	MS3400D24−10P	3	CONNECTOR	96906	1	PAOZZ	
20−308	5/105W703 * **	1213706−301 OR 1221866−301	2	CABLE ASSEMBLY	56232	1	PAOOO	D E
20−309	5/105W703J24 **	MS3400D24−10P	3	CONNECTOR	96906	1	PAOZZ	
20−310	5/105W704 **	1223751−301	2	CABLE ASSEMBLY	56232	1	PAOOO	M
20−311	5/105W704 **	1223842−301	2	CABLE ASSEMBLY	56232	1	PAOOO	N
20−312	5/105W704 **	1221867−301	2	CABLE ASSEMBLY	56232	1	PAOOO	G E
20−313	5/105W704J31* **	WC596/13−3	3	CONNECTOR	81348	1	PAOZZ	D E
20−314	5/105W704P1 ** THRU 5/105W704P4	428056	3	CORD ASSEMBLY, ELECTRICAL, POWER (56232) (spec dwg 1214913−201)	5Y921	4	PAOZZ	D E
20−315	**	MS25036−156	3	TERMINAL LUG	96906	2	PAOZZ	D E
20−316	5/105W705 * **	1222342−301	2	HARNESS ASSEMBLY	56232	1	PAOOO	D E
20−317	**	MS25036−101	3	TERMINAL LUG	96906	2	PAOZZ	D E
20−318	**	MS25036−103	3	TERMINAL LUG	96906	2	PAOZZ	D E
20−319	5/105W706 **	1223843−301	2	CABLE ASSEMBLY	56232	1	PAOOO	N
20−320	5/105W706J31 **	WC596/13−3	3	CONNECTOR	81348	1	PAOZZ	D E
20−321	5/105W706P1 ** 5/105W706P2	428056	3	CORD ASSEMBLY, ELECTRICAL, POWER (56232) (spec dwg 1214913−201)	5Y921	2	PAOZZ	D E
20−322	5/105W707 * **	1223815−301	2	CABLE ASSEMBLY	56232	1	PAOOO	D E
20−323	5/105W707J31 **	WC596/13−3	3	CONNECTOR	81348	1	PAOZZ	D E
20−324	**	MS25036−153	3	TERMINAL LUG	96906	1	PAOZZ	D E
20−325	**	MS25036−106	3	TERMINAL LUG	96906	1	PAOZZ	D E

NOTE * : SITE DEPENDENT

NOTE ** : NOT SHOWN

NOTE *** : REQUISITION HIGHEST REVISION LEVEL NSN MANAGED BY SOURCE OF SUPPLY (SOS) G13 OR S9_

FIGURE AND INDEX NO.	REF DES		PART NUMBER	INDENT	DESCRIPTION	CAGE CODE	QTY PER ASSY	CODES SMR	CODES USABLE ON
20−326	5/105W708	* **	1223816−302	2	CABLE ASSEMBLY	56232	1	PAOOO	D E
20−327		**	42332−4	3	TERMINAL, RECEPTACLE	00779	2	PAOZZ	D E
20−328		**	MS25036−153	3	TERMINAL LUG	96906	12	PAOZZ	D E
20−329	5/105W709	* **	1223814−302	2	CABLE ASSEMBLY	56232	1	PAOOO	D E
20−330	5/105W709J29	**	MS3402D18−4P	3	CONNECTOR	96906	1	PAOZZ	D E
20−331		**	42332−4	3	TERMINAL, RECEPTACLE	00779	3	PAOZZ	D E
20−332	5W1	**	34636−1102−101	2	CABLE ASSEMBLY	1M813	1	PAOOO	
20−333	5W1P1	**	MS3106R32−8S	3	CONNECTOR	96906	1	PAOZZ	
20−334	5W1P2	**	MS3106R32−8P	3	CONNECTOR	96906	1	PAOZZ	
20−335	5TB1		39TB12F	2	TERMINAL BOARD	81349	3	PAOZZ	
					(ATTACHING PARTS)				
			MS51958−66	2	SCREW	96906	4	PAOZZ	
			MS35338−138	2	WASHER	96906	4	PAOZZ	
			MS15795−808	2	WASHER	96906	4	PAOZZ	
			MS35650−304	2	NUT	96906	2	PAOZZ	
			NAS1831C6E10	2	POST	80205	2	PAOZZ	
					− − − − − − − − −				
20−336	5TB3		1213874−101	2	BUS BAR	56232	1	PAOZZ	
					(ATTACHING PARTS)				
			MS51964−101	2	SETSCREW	96906	1	PAOZZ	
			MS51958−63	2	SCREW	96906	2	PAOZZ	
			MS35338−141	2	WASHER	96906	1	PAOZZ	
			MS35338−138	2	WASHER	96906	2	PAOZZ	
			MS15795−814	2	WASHER	96906	2	PAOZZ	
			MS15795−808	2	WASHER	96906	2	PAOZZ	
			MS35691−23	2	NUT	96906	1	PAOZZ	
					− − − − − − − − −				
20−337			1213678−301	2	COVER	56232	2	PAOZZ	

NOTE * : SITE DEPENDENT

NOTE ** : NOT SHOWN

NOTE *** : REQUISITION HIGHEST REVISION LEVEL NSN MANAGED BY SOURCE OF SUPPLY (SOS) G13 OR S9_

FIGURE AND INDEX NO.	REF DES	PART NUMBER	INDENT	DESCRIPTION	CAGE CODE	QTY PER ASSY	CODES SMR	CODES USABLE ON
				(ATTACHING PARTS)				
		MS51957−28	2	SCREW	96906	4	PAOZZ	
		MS35338−136	2	WASHER	96906	4	PAOZZ	
		MS15795−805	2	WASHER	96906	4	PAOZZ	
				− − − − − − − − −				
20−338	5TB4 5TB5	37TB2F	2	TERMINAL BOARD	81349	2	PAOZZ	
				(ATTACHING PARTS)				
		MS51957−32	2	SCREW	96906	4	PAOZZ	
		MS35338−136	2	WASHER	96906	4	PAOZZ	
		MS15795−805	2	WASHER	96906	6	PAOZZ	
		MS35649−264	2	NUT	96906	2	PAOZZ	
		NAS1831−4C10	2	POST	80205	2	PAOZZ	
				− − − − − − − − −				
20−339		MSA37TB2	2	MARKER STRIP	96906	2	PAOZZ	
20−340	**	MS9349−21	2	CLAMP	96906	1	PAOZZ	
20−341	**	MS9349−27	2	CLAMP	96906	1	PAOZZ	
20−342	**	MS9349−17	2	CLAMP	96906	1	PAOZZ	
20−343	**	MS9349−07	2	CLAMP	96906	1	PAOZZ	
20−344	**	MS9349−11	2	CLAMP	96906	1	PAOZZ	
20−345	**	MS9349−25	2	CLAMP	96906	1	PAOZZ	B
20−346	**	CGS−50−3	2	GROUND STRIP, FLAT (56232) (spec dwg 1215191−201)	92194	8	PAOZZ	
20−347		1217074−301	2	GROUND STRAP	56232	4	PAOZZ	
20−348		1217074−303	2	GROUND STRAP	56232	1	PAOZZ	
20−349		1217074−302	2	GROUND STRAP	56232	1	PAOZZ	
20−350		1217074−308	2	GROUND STRAP	56232	1	PAOZZ	
20−351		1217074−309	2	GROUND STRAP	56232	1	PAOZZ	
20−352	**	1214747−301	2	JUMPER, POWER BUS BAR	56232	4	PAOZZ	
20−353	**	1214753−301	2	WIRING HARNESS	56232	1	PAOOO	
20−354	**	1214753−302	2	WIRING HARNESS	56232	1	PAOOO	
20−355	**	1214794−302	2	WIRING HARNESS	56232	1	PAOOO	

NOTE * : SITE DEPENDENT

NOTE ** : NOT SHOWN

NOTE *** : REQUISITION HIGHEST REVISION LEVEL NSN MANAGED BY SOURCE OF SUPPLY (SOS) G13 OR S9_

FIGURE AND INDEX NO.	REF DES	PART NUMBER	INDENT	DESCRIPTION	CAGE CODE	QTY PER ASSY	CODES SMR	CODES USABLE ON
20−356	**	1214794−303	2	WIRING HARNESS	56232	1	PAOOO	
20−357	**	1217696−301	2	WIRING HARNESS	56232	1	PAOOO	
20−358	5Z1	26−40754	2	CABINET, ELECTRICAL EQUIPMENT (56232) (spec dwg 1213451−201)	19178	1	XB	A B
	5Z1	22−46642	2	CABINET, ELECTRICAL EQUIPMENT (56232) (spec dwg 1213451−202)	19178	1	XB	B C E
	5Z1	22−52063	2	CABINET, ELECTRICAL EQUIPMENT (56232) (spec dwg 1213451−203)	19178	1	XB	D
	5Z1	26−52986	2	CABINET, ELECTRICAL EQUIPMENT (56232) (spec dwg 1213451−204)	19178	1	XB	C
	5Z1	26−52987	2	CABINET, ELECTRICAL EQUIPMENT (56232) (spec dwg 1213451−205)	19178	1	XB	C
20−359	5Z1MP1 **	1030−20220−1026	3	RFI, SHIELDING, DOOR (Order shielding per foot)	0R2V9	AR	PCOZZ	
20−360	** ***	17−688F01MXXRXX	2	CABLE, DUAL COAXIAL	30331	1	PAOZZ	D E
20−361	** ***	17−704F01MXXRXX	2	CABLE, FAN POWER	30331	1	PAOOO	D E
20−362	** ***	17−705F00MXXRXX	2	CABLE ASSEMBLY	30331	1	PAOOO	D E
20−363	** ***	17−706F05MXXRXX	2	CABLE ASSEMBLY	30331	1	PAOZZ	D E
20−364	** ***	17−709F02MXXRXX	2	CABLE ASSEMBLY	30331	1	PAOZZ	D E
20−365	5/105W710 ** ***	17−786F00MXXRXX	2	CABLE ASSEMBLY, MPC TO MPSC	30331	1	PAOOO	D E
20−366	** ***	95−636F00MXXRXX	2	CABLE ASSEMBLY	30331	2	PAOOO	D E
20−367	**	747306−3	3	CONNECTOR (30331) (source ctrl dwg 26−386F01)	00779	1	PAOZZ	D E
20−368	**	747303−3	3	CONNECTOR (30331) (spec dwg 26−421F01)	00779	1	PAOZZ	D E
20−369	** ***	17−989F04MXXRXX	2	CABLE ASSEMBLY	30331	2	PAOZZ	D E

NOTE * : SITE DEPENDENT

NOTE ** : NOT SHOWN

NOTE *** : REQUISITION HIGHEST REVISION LEVEL NSN MANAGED BY SOURCE OF SUPPLY (SOS) G13 OR S9_

FIGURE AND INDEX NO.	REF DES		PART NUMBER	INDENT	DESCRIPTION	CAGE CODE	QTY PER ASSY	CODES SMR	CODES USABLE ON
20−370		** ***	17−989F07MXXRXX	2	CABLE ASSEMBLY	30331	1	PAOZZ	D E
20−371		** ***	95−795F00MXXRXX	2	CABLE ASSEMBLY	30331	1	PAOOO	D E
20−372	5W711	** ***	95−628F02MXXRXX	2	CABLE ASSEMBLY	30331	1	PAOOO	D E
20−373		** ***	26−351F07MXXRXX	3	CONNECTOR, PLUG	30331	4	PAOZZ	D E
20−374		** ***	17−852F02MXXRXX	2	CABLE ASSEMBLY	30331	3	PAOZZ	
20−375	5W108	**	320226	2	CABLE ASSEMBLY, INTERCONNECTING, VCI−V TO VCI−C (56232) (spec dwg 1222346−204)	65994	1	PAOOO	D E
20−376		** ***	17−783F00MXXRXX	2	CABLE ASSEMBLY	30331	1	PAOZZ	
20−377		** ***	17−835F00MXXRXX	2	CABLE ASSEMBLY	30331	1	PAOZZ	
20−378	5A5W1	** ***	17−926F02MXXRXX	2	CABLE ASSEMBLY	30331	1	PAOZZ	
20−379		** ***	17−989F02MXXRXX	2	CABLE, TRANSMISSION, 40 FLAT	30331	1	PAOZZ	
20−380		** ***	95−791F00MXXRXX	2	CABLE ASSEMBLY	30331	1	PAOZZ	D E
20−381	5FL2	*	RF15009−1	2	FILTER, RFI (POWER MONITOR) (59901) (ALT PN M1931) (56232) (spec dwg 1224373−201)	13619	1	PAOZZ	J
	5/105FL2	*	RF15009−2	2	FILTER, RFI (POWER MONITOR) (59901) (ALT PN M1932) (56232) (spec dwg 1224373−202)	13619	1	PAOZZ	F
					(ATTACHING PARTS)				
			MS51958−63	2	SCREW	96906	2	PAOZZ	F
			MS15795−808	2	WASHER	96906	2	PAOZZ	F
			MS35338−138	2	WASHER	96906	2	PAOZZ	F
					− − − − − − − − −				
20−382	5A33		5D	2	MONITOR (0WY55) (vendor item dwg 2200015−201)	0WBG2	1	PAOLD	G

NOTE * : SITE DEPENDENT

NOTE ** : NOT SHOWN

NOTE *** : REQUISITION HIGHEST REVISION LEVEL NSN MANAGED BY SOURCE OF SUPPLY (SOS) G13 OR S9_

FIGURE AND INDEX NO.	REF DES	PART NUMBER	INDENT	DESCRIPTION	CAGE CODE	QTY PER ASSY	CODES SMR	CODES USABLE ON
	5/105A33	5D	2	MONITOR (0WY55) (vendor item dwg 2200015−201)	0WBG2	1	PAOLD	D
20−383	5A34	247432−001	2	KEYBOARD (0WY55) (vendor item dwg 2200014−202 or 2200105−202) (0TZZ9) (ALT PN KEY−C/104ENH)	65685	1	PAOZZ	G
	5/105A39	247432−001	2	KEYBOARD (0WY55) (vendor item dwg 2200014−202 or 2200105−202) (0TZZ9) (ALT PN KEY−C/104ENH)	65685	1	PAOZZ	D
20−384	5A32	2300000−301	2	CPU TERMINAL	0WY55	1	PAOLD	G
	5/105A38	2300028−301	2	CPU TERMINAL	0WY55	1	PAOLD	D
20−385		1214845−264	2	PLATE, DESIGNATION A33	56232	1	PAOZZ	G
20−386		1214845−265	2	PLATE, DESIGNATION A34	56232	1	PAOZZ	G
20−387		1214845−242	2	PLATE, DESIGNATION A32	56232	1	PAOZZ	G
20−388	5E1	ISOTEL4	2	SURGE SUPPRESSOR (0WY55) (vendor item dwg 2200020−201)	65836	1	PAOZZ	G
	5/105E1	ISOTEL4	2	SURGE SUPPRESSOR (0WY55) (vendor item dwg 2200020−201)	65836	1	PAOZZ	D
20−389	5A36 **	141189−401	2	MOUSE, SERIAL (0WY55) (vendor item dwg 2200014−203 or 2200105−203) (0TZZ9) (ALT PN MOU−MS/ERGO−PS2)	65685	1	PAOZZ	G
	5/105A40 **	141189−401	2	MOUSE, SERIAL (0WY55) (vendor item dwg 2200014−203 or 2200105−203) (0TZZ9) (ALT PN MOU−MS/ERGO−PS2)	65685	1	PAOZZ	D
20−390	5CP1 **	EVNBMCX	2	ADAPTER, SERIAL (7Z797) (ALT PN CC04133) (0WY55) (vendor item dwg 2200025−201)	59951	1	PAOZZ	G
	5/105CP1 **	EVNBMCX	2	ADAPTER, SERIAL (7Z797) (ALT PN CC04133) (0WY55) (vendor item dwg 2200025−201)	59951	1	PAOZZ	D

NOTE * : SITE DEPENDENT

NOTE ** : NOT SHOWN

NOTE *** : REQUISITION HIGHEST REVISION LEVEL NSN MANAGED BY SOURCE OF SUPPLY (SOS) G13 OR S9_

FIGURE AND INDEX NO.	REF DES	PART NUMBER	INDENT	DESCRIPTION	CAGE CODE	QTY PER ASSY	CODES SMR	CODES USABLE ON
	5CP2 **	EVNBMCX	2	ADAPTER, SERIAL (7Z797) (ALT PN CC04133) (0WY55) (vendor item dwg 2200025−201)	59951	1	PAOZZ	L
20−391	5A35 **	ME210	2	ADAPTER, NULL MODEM (0WY55) (vendor item dwg 2200021−201)	59951	1	PAOZZ	G
	5/105A41 **	ME210	2	ADAPTER, NULL MODEM (0WY55) (vendor item dwg 2200021−201)	59951	1	PAOZZ	D
20−392	1CP1 **	769−9654	2	JACK, DUPLEX (0WY55) (vendor item dwg 2200019−201)	2S518	1	PAOZZ	G
20−393	5/105W900 * **	1214756−304	2	CABLE ASSEMBLY	56232	1	PAOOO	G
20−394	5/105W901 * **	1214756−305	2	CABLE ASSEMBLY	56232	1	PAOOO	G
20−395	5/105W907 * **	1214871−331	2	CABLE ASSEMBLY	56232	1	PAOZZ	D
20−396	5/105A37	2300003−301	2	TERMINAL BOARD ASSEMBLY (FAA RMS)	0WY55	1	PAOZZ	H
20−397	5/105W911	2320008−301	2	CABLE ASSEMBLY (FAA RMS)	0WY55	1	PAOZZ	H
20−398	5/105W912	2320009−301	2	CABLE ASSEMBLY (FAA RMS)	0WY55	1	PAOZZ	H
20−399	5/105W910	2320007−301	2	CABLE ASSEMBLY (FAA RMS)	0WY55	1	PAOZZ	H
20−400	5/105A37W1	2320013−302	2	CABLE ASSEMBLY (FAA RMS)	0WY55	1	PAOZZ	H
20−401	5MP2	S1006−20	2	FILTER ELEMENT, AIR	03522	1	PAOZZ	
20−402	5/105W902 **	2320002−302	2	CABLE ASSEMBLY	0WY55	1	PAOZZ	G
20−403	5/105W902A **	2320002−308	2	CABLE ASSEMBLY	0WY55	1	PAOZZ	D
20−404	5/105W692 * **	1224355−301	2	CABLE ASSEMBLY	56232	1	PAOOO	J
20−405	5/105W692P1 **	DCU−37PF0	3	CONNECTOR, ELECTRICAL, PLUG (56232) (spec dwg 1218768−204)	71468	1	PAOZZ	J
20−406	5/105W692P2 **	DCU−37SF0	3	CONNECTOR, ELECTRICAL, PLUG (56232) (spec dwg 1218767−204)	71468	1	PAOZZ	J

NOTE * : SITE DEPENDENT

NOTE ** : NOT SHOWN

NOTE *** : REQUISITION HIGHEST REVISION LEVEL NSN MANAGED BY SOURCE OF SUPPLY (SOS) G13 OR S9_

FIGURE AND INDEX NO.	REF DES	PART NUMBER	INDENT	DESCRIPTION	CAGE CODE	QTY PER ASSY	CODES SMR	CODES USABLE ON
20−407	**	17−1657−37	3	BACKSHELL, D−SUB, RFI/EMI (38250) (ALT PN C88000206) (56232) (spec dwg 1218764−204)	02660	2	PAOZZ	J
20−408	5/105W693 * **	1224369−301	2	CABLE ASSEMBLY	56232	1	PAOOO	F
20−409	5/105W693P1 **	DEU−9PF0	3	CONNECTOR, D−SUB, PLUG (56232) (spec dwg 1218768−201)	71468	1	PAOZZ	F
20−410	5/105W693P2 **	DDU−50SF0	3	CONNECTOR, RECEPTACLE, ELECTRICAL (56232) (spec dwg 1218767−205)	71468	1	PAOZZ	F
20−411	**	17−1657−50	3	BACKSHELL, D−SUB, RFI/EMI (38250) (ALT PN C88000208) (56232) (spec dwg 1218764−205)	02660	2	PAOZZ	F
20−412	5/105W602 * **	1213564−302	2	CABLE ASSEMBLY	56232	1	PAOOO	J
20−413	5/105W602P1 ** 5/105W602J9	MS24308/4−4	3	CONNECTOR	81349	2	PAOOO	J
20−414	**	17−1657−37	3	BACKSHELL, D−SUB, RFI/EMI (38250) (ALT PN C88000206) (56232) (spec dwg 1218764−204)	02660	1	PAOZZ	J
20−415	**	C88134040	3	BACKSHELL, RFI/EMI	38250	1	PAOZZ	J
20−416	5/105W661 **	1218224−302	2	CABLE ASSEMBLY	56232	1	PAOOO	F
20−417	5/105W661P1 ** 5/105W661J13	MS24308/4−5	3	CONNECTOR	81349	2	PAOZZ	F
20−418	**	KDM001−50CA1JR	3	BACKSHELL, RFI/EMI, STRAIN RELIEF (31461) (ALT PN 901−307−31F) (56232) (spec dwg 1214498−231)	50619	1	PAOZZ	F
20−419	**	CT02154	3	BACKSHELL, RFI/EMI, STRAIN RELIEF	50619	1	PAOZZ	F
20−420	5/105W914 **	2320085−301	2	CABLE ASSEMBLY	0WY55	1	PAOZZ	L
20−421	1W900 **	2320002−301	2	CABLE ASSEMBLY, 300”	0WY55	1	PAOZZ	G
20−422	1W900−1 **	2320002−309	2	CABLE ASSEMBLY, 600”	0WY55	1	PAOZZ	D
20−423	1W901 **	2320002−307	2	CABLE ASSEMBLY, 600”	0WY55	1	PAOZZ	D
20−424	W905 **	2320002−305	2	CABLE ASSEMBLY, 300”	0WY55	1	PAOZZ	D

NOTE * : SITE DEPENDENT

NOTE ** : NOT SHOWN

NOTE *** : REQUISITION HIGHEST REVISION LEVEL NSN MANAGED BY SOURCE OF SUPPLY (SOS) G13 OR S9_

FIGURE AND INDEX NO.	REF DES	PART NUMBER	INDENT	DESCRIPTION	CAGE CODE	QTY PER ASSY	CODES SMR	CODES USABLE ON
20−425	5/105W916 **	1223378−305	2	CABLE ASSEMBLY	56232	1	PAOOO	D

USABLE ON CODES

A − LIMITED PRODUCTION WITH MICRO 5 MODIFICATION
B − FULL SCALE PRODUCTION WITH MICRO 5
C − TRAINING SITES WITH MICRO 5 MODIFICATION
D − NWS REDUNDANT RDA
E − FAA REDUNDANT RDA AND RPG
F − REDUNDANT WITH POWER MONITOR FILTERS INSTALLED
G − DOD AND NWS SINGLE THREAD
H − FAA RMS
J − SINGLE THREAD WITH POWER MONITOR FILTER INSTALLED
K − NWS SINGLE CHANNEL
L − DOD SINGLE CHANNEL
M − NWS REDUNDANT CHANNEL #1
N − NWS REDUNDANT CHANNEL #2

NOTE * : SITE DEPENDENT
NOTE ** : NOT SHOWN
NOTE *** : REQUISITION HIGHEST REVISION LEVEL NSN MANAGED BY SOURCE OF SUPPLY (SOS) G13 OR S9_

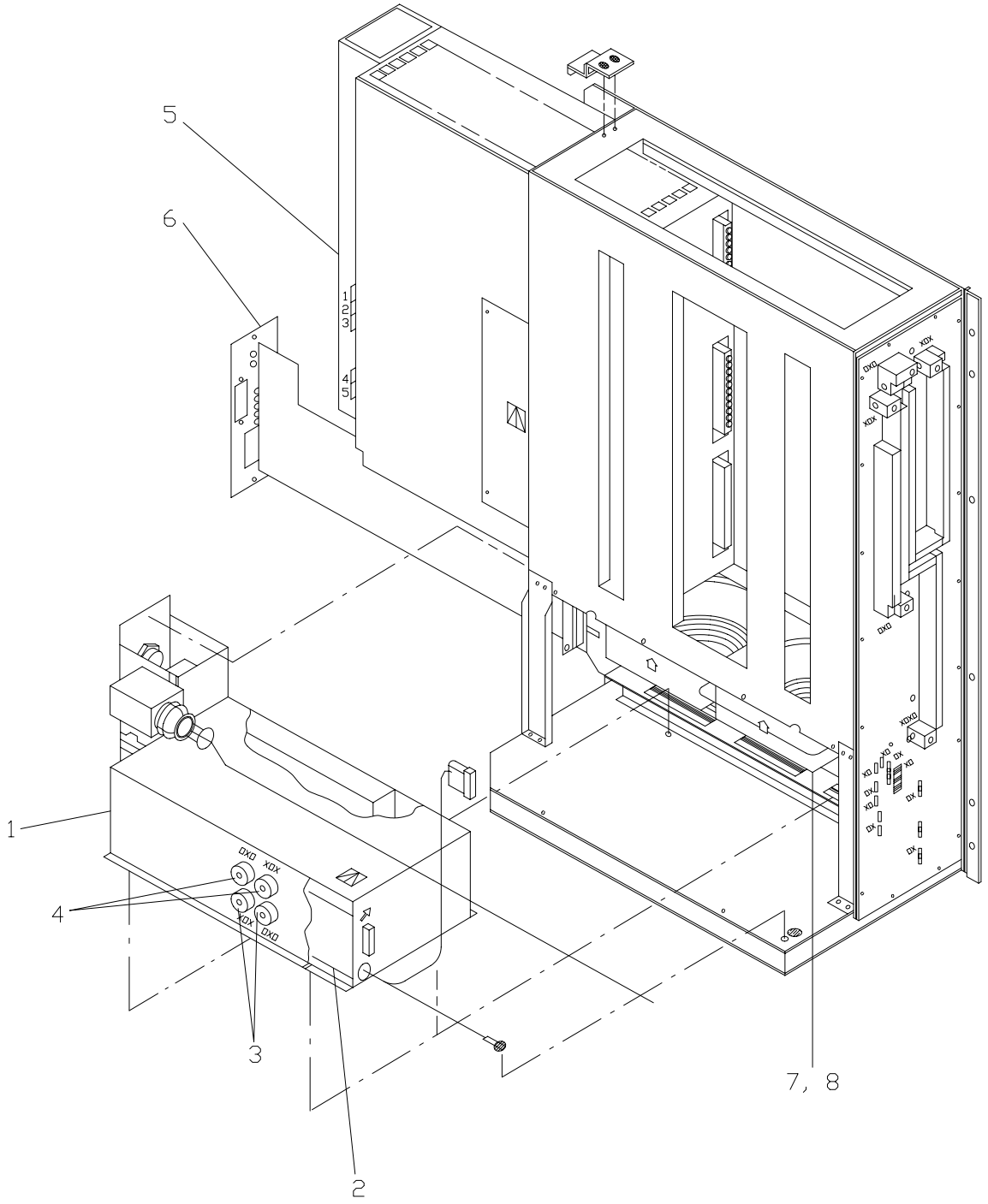

NX1154

FIGURE 21. Swingout Power Subsystem, UD5PS5, and UD41PS1

FIGURE AND INDEX NO.	REF DES	PART NUMBER	INDENT	DESCRIPTION	CAGE CODE	QTY PER ASSY	CODES SMR	CODES USABLE ON
21−	5PS5 * 41PS1	93−AAYF00MXXRXX	1	SWINGOUT POWER SUBSYSTEM (For NHA see FIGURE 20 on Page 2 − 207 and FIGURE 46 on Page 2 − 365)	30331	REF	PAODD	
21−1	5PS5A1 * 41PS1A1	93−ABJF00M00RXX	2	AC POWER MODULE	30331	1	PAODD	
				(ATTACHING PARTS)				
	*	66−172F02MXXRXX	2	SCREW, 6−32 X 0.375 IN.	30331	4	PAOZZ	
		980−01032−06	2	SCREW, 10−32 X 3/8 IN.	30331	1	PAOZZ	
				− − − − − − − − −				
21−2	5PS5A1BT1 * 41PS1A1BT1	NP4−12	3	BATTERY, 12V, 4AH (30331) (ALT PN 24−133F00)	90660	1	PAOZZ	
21−3	5PS5A1CB4 5PS5A1CB5 41PS1A1CB4 41PS1A1CB5	36−038F03MXXRXX	3	CIRCUIT BREAKER, 0.5A	30331	2	PAOZZ	
21−4	5PS5A1CB6 5PS5A1CB7 41PS1A1CB6 41PS1A1CB7	36−038F00MXXRXX	3	CIRCUIT BREAKER, 2A	30331	2	PAOZZ	
21−5	5PS5A2 * 41PS1A2	93−ABRF00M00R04	2	DC POWER SUPPLY	30331	1	PAOLD	
21−6	5PS5A3 * 41PS1A3	09−227F00MXXRXX	2	CDS CONTROL MODULE	30331	1	PAOLD	
				(ATTACHING PARTS)				
	*	66−033F03MXXRXX	2	SCREW, 4−40 X 0.38 IN.	30331	3	PAOZZ	
	*	16−063F01MXXRXX	2	WASHER, NO.4, NYLON	30331	3	PAOZZ	
				− − − − − − − − −				
21−7	5PS5A4 * 41PS1A4	93−ABMF00MXXRXX	2	FAN ASSEMBLY	30331	1	PAODD	
				(ATTACHING PARTS)				
	*	66−033F03MXXRXX	2	SCREW, 4−40 X 0.38 IN.	30331	4	PAOZZ	
				− − − − − − − − −				
21−8	5PS5A4B1 5PS5A4B2 41PS1A4B1 41PS1A4B2	WZG110−AM39−92	3	FAN	62292	2	PAOZZ	

NOTE * : REQUISITION THE HIGHEST REVISION LEVEL NSN MANAGED BY SOURCE OF SUPPLY (SOS) G13 OR S9_

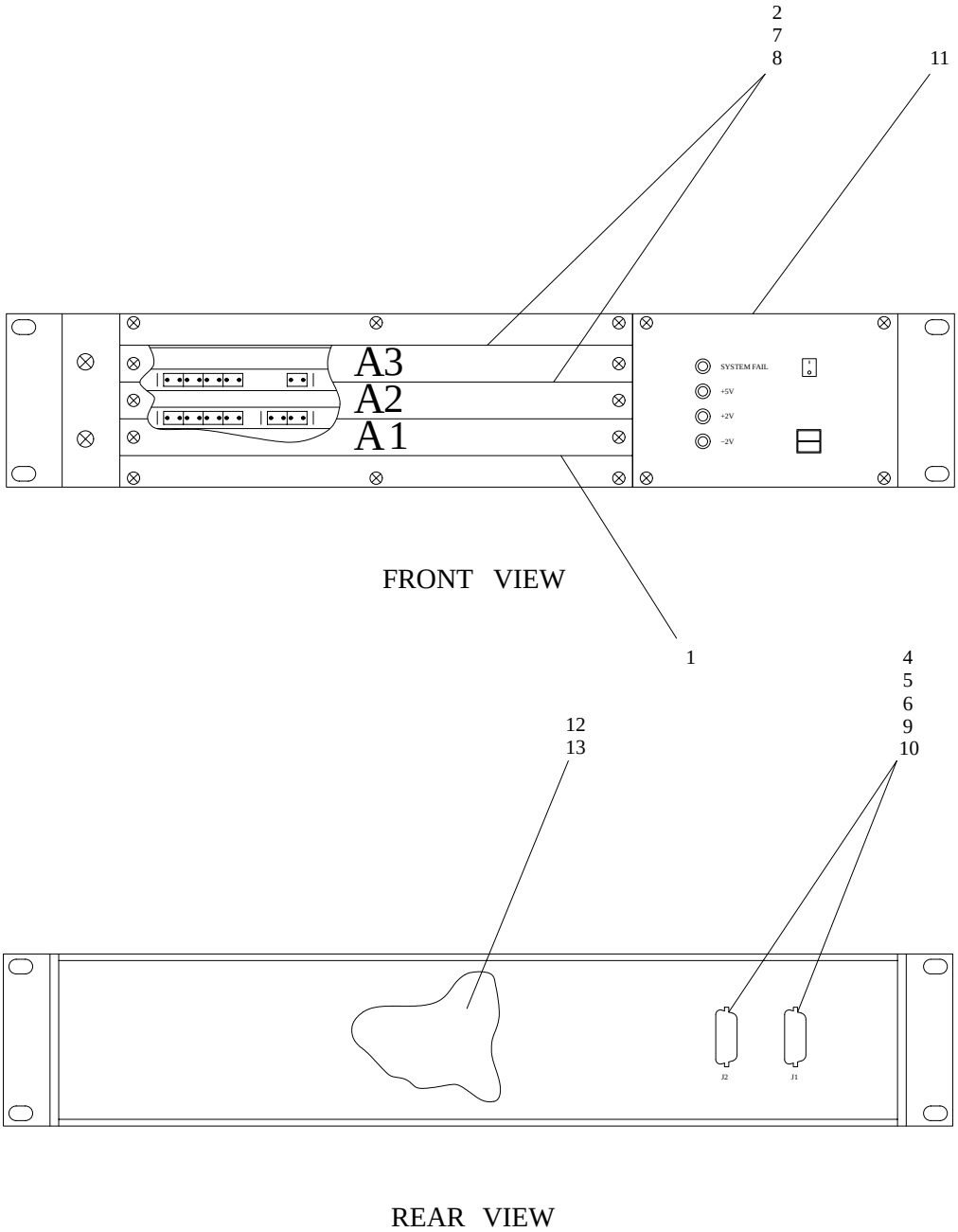

NX1155

FIGURE 22. RDA VME Assembly, UD5A1

FIGURE AND INDEX NO.	REF DES		PART NUMBER	INDENT	DESCRIPTION	CAGE CODE	QTY PER ASSY	CODES SMR	CODES USABLE ON
22−	5A1 105A1	* *	1222416−301 OR 1222416−302	1	VME ASSEMBLY, RDA (For NHA see FIGURE 20 on Page 2 − 207)	56232	REF	XB	
22−1	5A1A1		224001	2	MODULE, VCI−V (56232) (spec dwg 1222346−203)	65994	1	PAOLD	
22−2	5A1A2 5A1A3	*	01−W3840B−01	2	CIRCUIT CARD ASSEMBLY, ISDN PRIMARY RATE CONTROLLER (WIDEBAND) (90536) (spec dwg 7921104−00)	0B1A3	2	PAOLD	
22−3	5A1W1	* **	1222424−301	2	CABLE ASSEMBLY, WIDEBAND INTERFACE	56232	2	PAOOO	
22−4	5A1W1J1	*	205205−2	3	CONNECTOR, RECEPTACLE, ELECTRICAL (56232) (spec dwg 1223103−201)	00779	1	PAOZZ	
22−5	5A1W1P1	*	925486−1	3	CONNECTOR, RECEPTACLE, ELECTRICAL (56232) (spec dwg 1223111−201)	00779	1	PAOZZ	
22−6			1−745253−6	3	CONTACT, REMOVABLE CRIMP, FEMALE (56232) (spec dwg 1223103−202)	00779	15	PAOZZ	
22−7			530151−8	3	CONTACT, SNAP−IN CRIMP, FEMALE (56232) (spec dwg 1223111−202)	00779	96	PAOZZ	
22−8			M24308/26−1	3	CONNECTOR JACKSCREW	81349	2	PAOZZ	
22−9	5A1W1E1	*	MS25036−148	3	TERMINAL LUG	96906	1	PAOZZ	
22−10		*	M24308/26−2	2	CONNECTOR JACKSCREW	81349	4	PAOZZ	
22−11	5A1A4		12V−219−R03J12MP85	2	VME CHASSIS (56232) (spec dwg 1222420−202)	76096	1	PAODD	
			2500024−301	2	FAA MODIFIED VME CHASSIS	0WY55	1	PAOZZ	A
22−12	5A1B1 5A1B2		2410ML04WB30−P00	3	FAN ASSEMBLY, RDA VME CHASSIS (56232) (spec dwg 1222418−202)	0D1M6	2	PAOZZ	
22−13	5A1PS1		QT4A1BD	3	POWER SUPPLY, RDA VME CHASSIS (56232) (spec dwg 1222419−202)	63865	1	PAODD	
22−14	5/105A1W2	**	2330001−301	3	CABLE ASSEMBLY (FAA RMS)	0WY55	1	PAOZZ	A
	NOTE * : SITE DEPENDENT NOTE ** : NOT SHOWN								

Section II. Maintenance Parts List

FIGURE AND INDEX NO.	REF DES	PART NUMBER	INDENT	DESCRIPTION	CAGE CODE	QTY PER ASSY	CODES	
							SMR	USABLE ON
	USABLE ON CODES A − FAA RMS NOTE * : SITE DEPENDENT NOTE ** : NOT SHOWN							

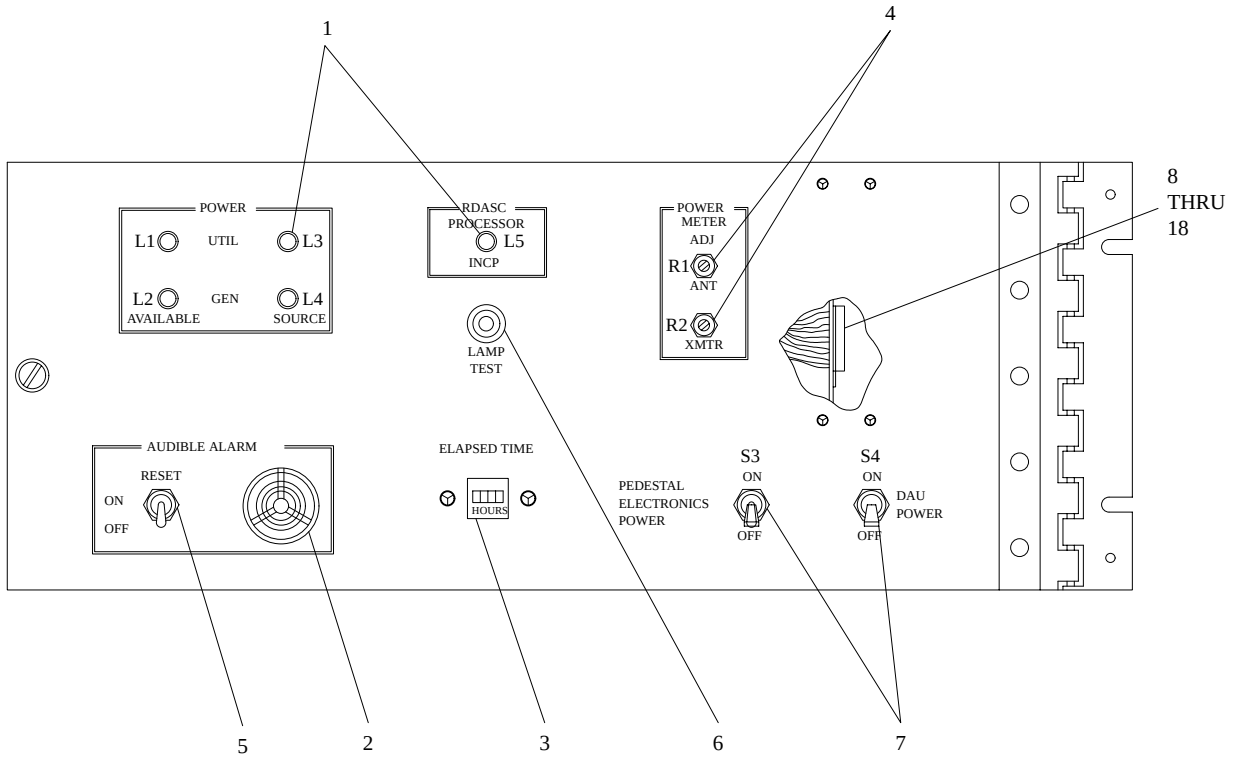

NX1156

FIGURE 23. Maintenance/RDA Panel Assembly, UD5A2

FIGURE AND INDEX NO.	REF DES	PART NUMBER	INDENT	DESCRIPTION	CAGE CODE	QTY PER ASSY	CODES SMR	CODES USABLE ON
23−	5A2 * 105A2	1213593−XXX	1	PANEL ASSEMBLY, MAINTENANCE/RDA (For NHA see FIGURE 20 on Page 2 − 207)	56232	REF	XC	
23−1	5A2DS1 THRU 5A2DS5	JANTXM19500/51902	2	LIGHT EMITTING DIODE	81349	5	PAOZZ	
23−2	5A2LS1	SC628MP	2	BUZZER, ELECTRONIC (56232) (spec dwg 1217044−201)	37942	1	PAOZZ	
23−3	5A2M1	M7793/3−001	2	METER	81349	1	PAOZZ	
				(ATTACHING PARTS)				
		MS51957−17	2	SCREW	96906	2	PAOZZ	
		MS35338−135	2	WASHER	96906	2	PAOZZ	
		MS15795−803	2	WASHER	96906	4	PAOZZ	
		MS35649−244	2	NUT	96906	2	PAOZZ	
				− − − − − − − − −				
23−4	5A2R1 5A2R2	M39015/1−007YP	2	RESISTOR	81349	2	PAOZZ	
23−5	5A2S1	M83731/9−311	2	SWITCH	81349	1	PAOZZ	
23−6	5A2S2	M8805/96−009	2	SWITCH	81349	1	PAOZZ	
23−7	5A2S3 5A2S4	MS24523−22	2	SWITCH	96906	2	PAOZZ	
23−8	5A2TB1	39TB5F	2	TERMINAL BOARD	81349	1	PAOZZ	
				(ATTACHING PARTS)				
		MS51958−67	2	SCREW	96906	2	PAOZZ	
		MS51958−68	2	SCREW	96906	2	PAOZZ	
		MS15795−808	2	WASHER	96906	6	PAOZZ	
		MS35338−138	2	WASHER	96906	4	PAOZZ	
		MS35650−304	2	NUT	96906	2	PAOZZ	
				− − − − − − − − −				
23−9	5W634	1213502−301	2	CABLE ASSEMBLY	56232	1	PAOOO	
23−10	5W634P1	DBU−25PF0	3	CONNECTOR, PLUG, ELECTRICAL (56232) (spec dwg 1218768−203)	71468	1	PAOZZ	
23−11	5W634P2	M24308/25−9	3	CONNECTOR, SCREWLOCK	81349	2	PAOZZ	
23−12	5W634P3	MS25036−101	3	TERMINAL LUG	96906	2	PAOZZ	
23−13	5W634P4	MS25036−148	3	TERMINAL LUG	96906	1	PAOZZ	
23−14		M85049/48−2−3	3	CONNECTOR ACCESSORIES	81349	1	PAOZZ	
	NOTE * :	SITE DEPENDENT						

FIGURE AND INDEX NO.	REF DES	PART NUMBER	INDENT	DESCRIPTION	CAGE CODE	QTY PER ASSY	CODES	
							SMR	USABLE ON
23−15		TBJC	2	BUS (JUMPER)	81349	1	PAOZZ	
23−16		MS25036−106	2	TERMINAL LUG	96906	5	PAOZZ	
23−17		MS25036−153	2	TERMINAL LUG	96906	3	PAOZZ	
23−18		MS25036−149	2	TERMINAL LUG	96906	2	PAOZZ	
	NOTE * :	SITE DEPENDENT						

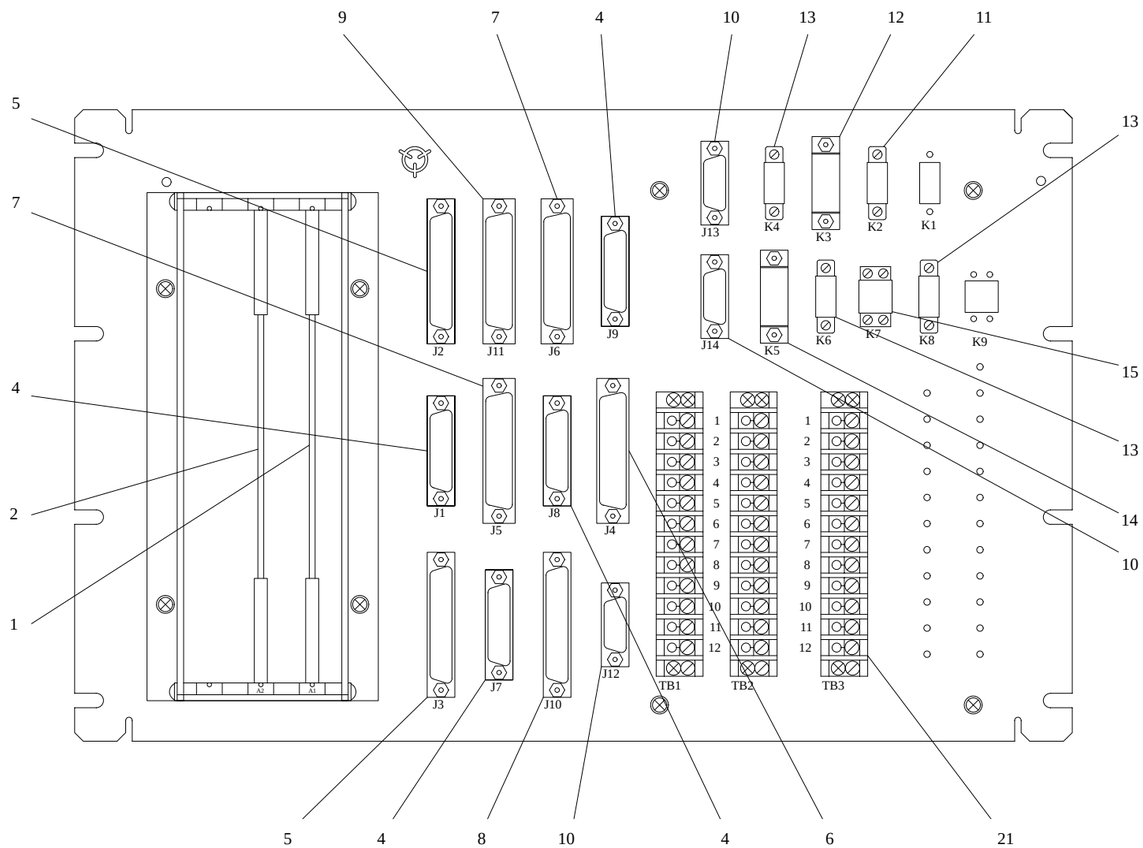

FRONT VIEW

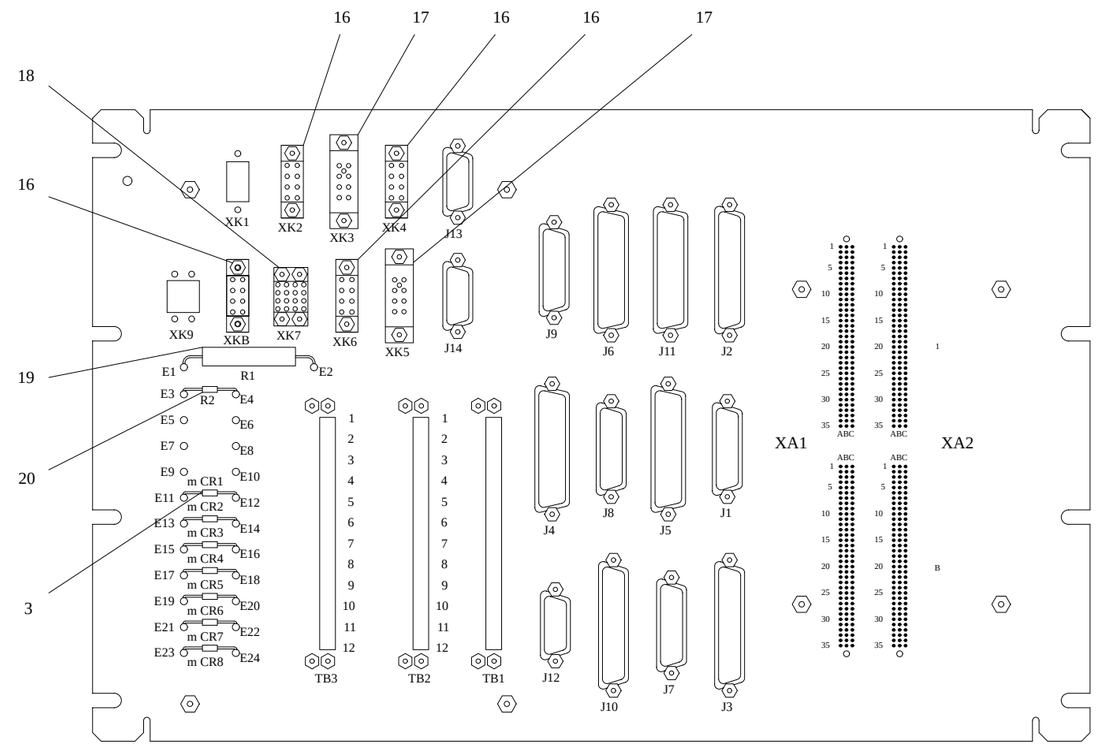

REAR VIEW

NX1157

FIGURE 24. DAU Panel Assembly, UD5A3

FIGURE AND INDEX NO.	REF DES	PART NUMBER	INDENT	DESCRIPTION	CAGE CODE	QTY PER ASSY	CODES SMR	CODES USABLE ON
24−	5A3 *	1213458−301	1	DAU PANEL ASSEMBLY (For NHA see FIGURE 20 on Page 2 − 207)	56232	REF	PAODD	A
	5A3 * 105A3	1218226−XXX	1	DAU PANEL ASSEMBLY (FOR NHA see FIGURE 20 on Page 2 − 207)	56232	REF	PAODD	B
24−1	5A3A1	1389802−302	2	CIRCUIT CARD ASSEMBLY, DAU DIGITAL PROCESSOR	56232	1	PAOLD	
24−2	5A3A2	1526471−301	2	ANALOG PROCESSOR	56232	1	PAOLD	
24−3	5A3CR2 * THRU 5A3CR8	JANTX1N649−1	2	SEMICONDUCTOR DEVICE	81349	7	PAOZZ	
24−4	5A3J1 * 5A3J7 THRU 5A3J9	DBMM25SF179	2	CONNECTOR, ELECTRICAL, RECTANGULAR, 25 CONTACTS (56232) (spec dwg 1214956−203)	71468	4	PAOZZ	
24−5	5A3J2 * 5A3J3	DCMM37SF179	2	CONNECTOR, ELECTRICAL, RECTANGULAR, 37 CONTACTS (56232) (spec dwg 1214956−204)	71468	2	PAOZZ	
24−6	5A3J4 *	DCMM37SF179	2	CONNECTOR, ELECTRICAL, RECTANGULAR, 37 CONTACTS (56232) (spec dwg 1214956−204)	71468	1	PAOZZ	A
	5A3J4 *	DDMM50SF179	2	CONNECTOR, ELECTRICAL, RECTANGULAR, 50 CONTACTS (56232) (spec dwg 1214956−205)	71468	1	PAOZZ	B
24−7	5A3J5 * 5A3J6	DDMM50SF179	2	CONNECTOR, ELECTRICAL, RECTANGULAR, 50 CONTACTS (56232) (spec dwg 1214956−205)	71468	2	PAOZZ	
24−8	5A3J10	DCMM37PF179	2	CONNECTOR, D−SUB, WIRE WRAP (56232) (spec dwg 1214957−204)	71468	1	PAOZZ	
24−9	5A3J11	DBMM25SF179	2	CONNECTOR, ELECTRICAL, RECTANGULAR, 25 CONTACTS (56232) (spec dwg 1214956−203)	71468	1	PAOZZ	A
	5A3J11 *	DDMM50SF179	2	CONNECTOR, ELECTRICAL, RECTANGULAR, 50 CONTACTS (56232) (spec dwg 1214956−205)	71468	1	PAOZZ	B
	NOTE * :	SITE DEPENDENT						

FIGURE AND INDEX NO.	REF DES	PART NUMBER	INDENT	DESCRIPTION	CAGE CODE	QTY PER ASSY	CODES SMR	CODES USABLE ON
24−10	5A3J12 THRU 5A3J14	DAMM15SF179	2	CONNECTOR, ELECTRICAL, RECTANGULAR, 15 CONTACTS (56232) (spec dwg 1214956−202)	71468	3	PAOZZ	B
				(ATTACHING PARTS)				
		M24308/26−2	2	CONNECTOR JACKSCREW	81349	28	PAOZZ	
				− − − − − − − − −				
24−11	5A3K2	M39016/6−141M	2	RELAY	81349	1	PAOZZ	
24−12	5A3K3	M83536/9−024M	2	RELAY	81349	1	PAOZZ	
24−13	5A3K4 5A3K6 5A3K8	M39016/6−141M	2	RELAY	81349	3	PAOZZ	B
24−14	5A3K5	M83536/9−024M	2	RELAY	81349	1	PAOZZ	B
24−15	5A3K7	M39016/53−026M	2	RELAY	81349	1	PAOZZ	B
24−16	5A3XK2 5A3XK4 5A3XK6 5A3XK8	HRCW−31JT3	2	SOCKET, RELAY (56232) (spec dwg 339222−2)	91663	4	PAOZZ	
24−17	5A3XK3 5A3XK5	M12883/41−06S	2	SOCKET	81349	2	PAOZZ	
24−18	5A3XK7	HRFB−605JT3	2	SOCKET, RELAY (56232) (spec dwg 1218228−201)	91663	1	PAOZZ	B
24−19	5A3R1	RWR78S1000FS	2	RESISTOR	81349	1	PAOZZ	
24−20	5A3R2	RLR07C2740FS	2	RESISTOR	81349	1	PAOZZ	
24−21	5A3TB1 THRU 5A3TB3	A−A−59125/4	2	TERMINAL BOARD	81349	3	PAOZZ	B
				(ATTACHING PARTS)				
		MS51957−31	2	SCREW	96906	12	PAOZZ	B
		MS35338−136	2	WASHER	96906	12	PAOZZ	B
		NAS620C6	2	WASHER	80205	24	PAOZZ	B
		NAS671C6	2	NUT	80205	12	PAOZZ	B
				− − − − − − − − −				
		USABLE ON CODES A − NON REDUNDANT CONFIGURATION B − REDUNDANT CONFIGURATION						
	NOTE * :	SITE DEPENDENT						

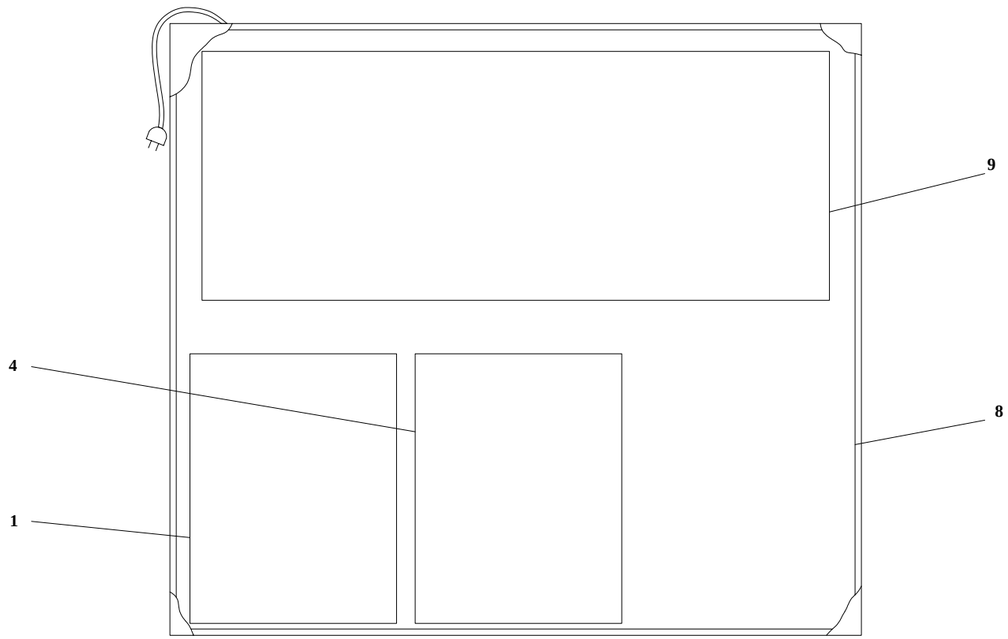

TOP VIEW

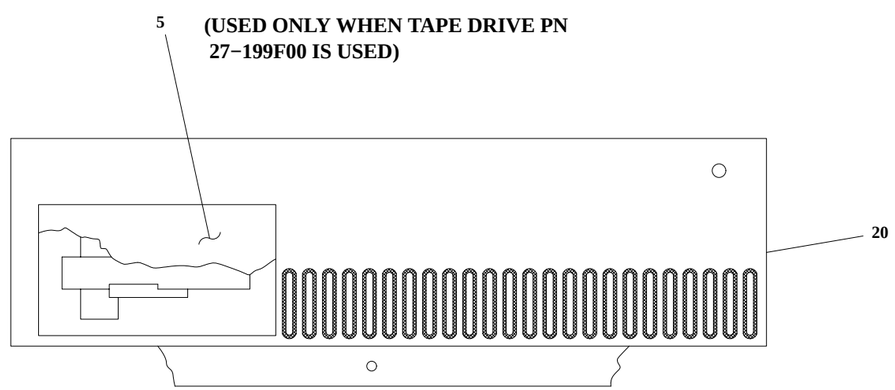

FRONT VIEW (WITH COVER)

NX1158

CABLE ASSEMBLIES (NOT SHOWN)

INDEX NO.	REF DES	FROM	TO	USABLE ON CODE
25−11	−	TB2 TB3	GND	−
25−13	−	TB2 TB3	P2(A5A1) P3(A5A2)	− −

FIGURE 25. SCSI Assembly, UD5A5

FIGURE AND INDEX NO.	REF DES		PART NUMBER	INDENT	DESCRIPTION	CAGE CODE	QTY PER ASSY	CODES SMR	CODES USABLE ON
25−	5A5 105A5	***	92−390F01MXXRXX	1	SCSI ASSEMBLY (For NHA see FIGURE 20 on page 2 − 207)	30331	REF	AD	
25−1	5A5A1	** ***	27−199F00MXXRXX	2	TAPE DRIVE, 1/4 IN.	30331	1	PAOLD	
25−2	5A5A1C01	*	DC 600A	2	TAPE, CARTRIDGE, MAGNETIC, DATA STORAGE (SCSI)	52327	1	PAOZZ	
25−3	5A5A1C02	*	102791−12	2	KIT, HEAD CLEANING 1/4 IN CARTRIDGE DRIVE (SCSI)	60902	1	PAOZZ	
25−4	5A5A2	** ***	27−204F00MXXRXX	2	DISK DRIVE, 600MB	30331	1	PAOLD	
25−5		***	93−ADLF00MXXRXX	2	COVER, FRONT PANEL	30331	1	PAOZZ	
25−6		*	MS35649−264	3	NUT, HEX	96906	2	PAOZZ	
25−7		* ***	16−328F02MXXRXX	3	LOCK, WASHER	30331	2	PAOZZ	
25−8	5A5A4	***	93−527F00MXXRXX	2	SCSI ENCLOSURE ASSEMBLY WITH POWER SUPPLY	30331	1	PBOZZ	
25−9	5A5PS1	***	34−046F01MXXRXX	3	POWER SUPPLY, +12, +5V, SCSI (0KY32) (ALT PN SQV400−1222)	30331	1	PAOLD	
25−10	5A5PS1F2	*	217 3.15	3	FUSE, 250V, 3.15A	75915	1	PAOZZ	
25−11		* ***	17−834F00MXXRXX	3	GROUND STRAP	30331	1	PAOZZ	
25−12	5A5W3	* ***	17−873F00MXXRXX	3	CABLE, FRONT PANEL	30331	1	PAOZZ	
25−13	5A5W2	* ***	17−928F00MXXRXX	2	CABLE, POWER, 5/12 VDC	30331	1	PAOZZ	
25−14		* ***	95−580F00MXXRXX	2	CABLE, FAN ADAPTER	30331	1	PAOOO	
25−15		*	1−480702−0	3	CONNECTOR	00779	1	PAOZZ	
25−16		* ***	26−304F01MXXRXX	3	CONNECTOR, PLUG	30331	1	PAOZZ	
25−17		* ***	26−303F02MXXRXX	3	CONTACT	30331	4	PAOZZ	
25−18		* ***	26−295F04MXXRXX	3	CONTACT	30331	2	PAOZZ	

NOTE * : NOT SHOWN

NOTE ** : SITE DEPENDENT

NOTE *** : REQUISITION HIGHEST REVISION LEVEL NSN MANAGED BY SOURCE OF SUPPLY (SOS) G13 OR S9_

FIGURE AND INDEX NO.	REF DES	PART NUMBER	INDENT	DESCRIPTION	CAGE CODE	QTY PER ASSY	CODES	
							SMR	USABLE ON
25−19	5A5DS1 * ***	33−053F00MXXRXX	2	LED (28480) (ALT PN HLMP−3300)	30331	1	PAOZZ	
25−20	***	14−847F00MXXRXX	2	COVER, SCSI	30331	1	PAOZZ	

NOTE * : NOT SHOWN

NOTE ** : SITE DEPENDENT

NOTE *** : REQUISITION HIGHEST REVISION LEVEL NSN MANAGED BY SOURCE OF SUPPLY (SOS) G13 OR S9_

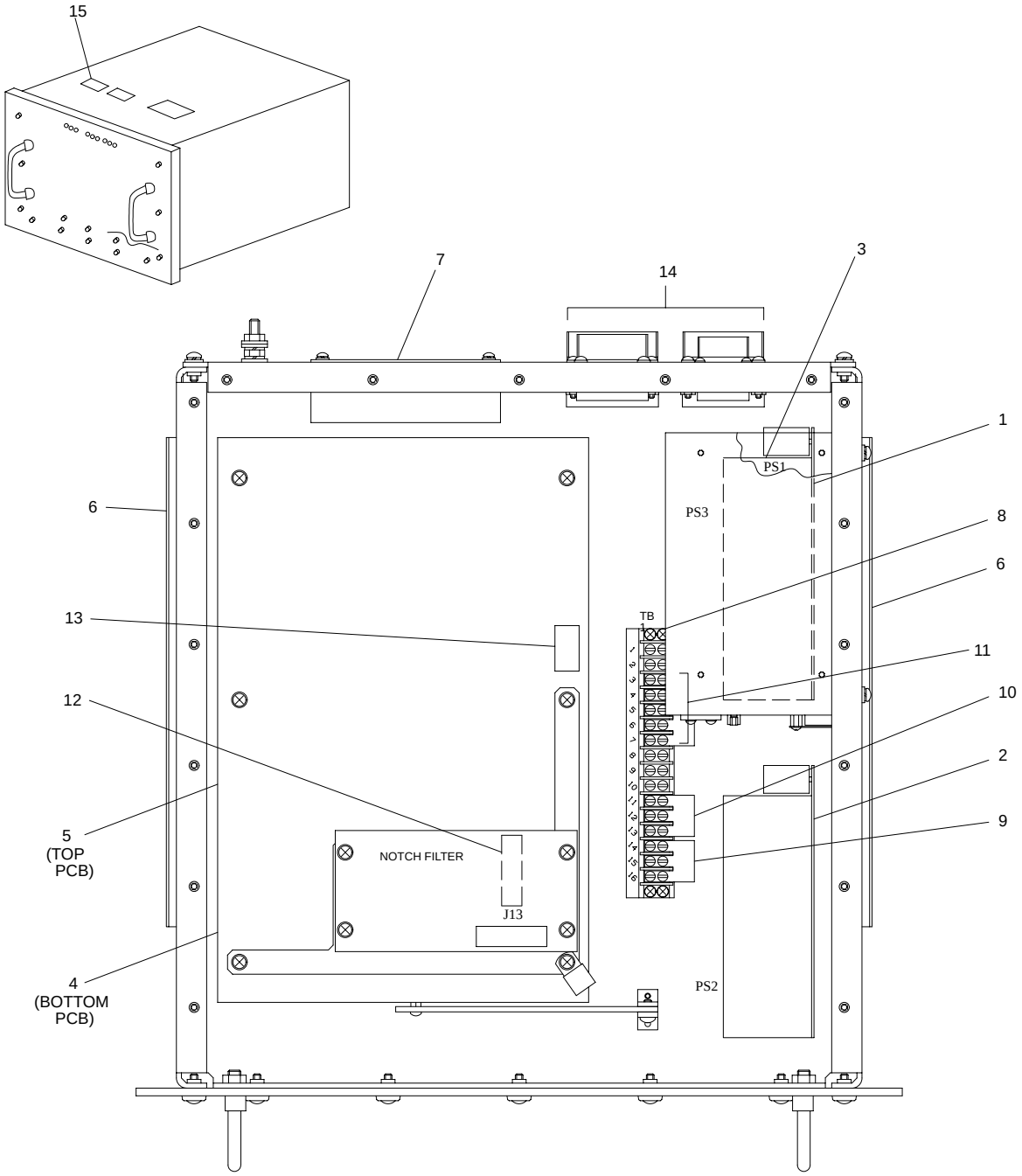

NX1159

FIGURE 26. Digital Control Unit, UD5A6

FIGURE AND INDEX NO.	REF DES	PART NUMBER	INDENT	DESCRIPTION	CAGE CODE	QTY PER ASSY	CODES SMR	CODES USABLE ON
26−	5A6	2500002−301	1	DIGITAL CONTROL UNIT (For NHA see FIGURE 20 on Page 2 − 207)	0WY55	REF	PBODD	
26−1	5A6PS1	ZB90T5/15	2	POWER SUPPLY, +5V, +/−15V	58910	1	PAODD	
26−2	5A6PS2	Z28B4	2	POWER SUPPLY, +28V	58910	1	PAODD	
				(ATTACHING PARTS)				
		MS51957−45	2	SCREW	96906	6	PAOZZ	
		MS35338−137	2	WASHER	96906	6	PAOZZ	
		MS15795−807	2	WASHER	96906	6	PAOZZ	
				− − − − − − − − −				
26−3	5A6PS3	LZS−50−1	2	POWER SUPPLY, +5V (0WY55) (spec dwg 2200022−201)	4D307	1	PAOOO	
		312 5A	3	FUSE, 250V	75915	1	PAOZZ	
		MDA 2½A	3	FUSE, 250V	71400	1	PAOZZ	
				(ATTACHING PARTS)				
		B1867EC040130	2	SCREW	80204	3	PAOZZ	
		D70342/2−053	2	WASHER	81349	3	PAOZZ	
		D70336/1−20	2	WASHER	81349	3	PAOZZ	
				− − − − − − − − −				
26−4	5A6A2	40505−1302−102	2	DIGITAL CARD	1M813	1	PAOLD	
26−5	5A6A1	40505−1301−102	2	ANALOG CARD W/NOTCH FILTER	1M813	1	PAOLD	
26−6		C−230−S−118	2	SLIDE, CHASSIS	06666	2	PAOZZ	
26−7	5A6B1	028422	2	FAN, TUBEAXIAL	5Y921	1	PAOZZ	
				(ATTACHING PARTS)				
		MS51957−33	2	SCREW	96906	4	PAOZZ	
		MS35338−136	2	WASHER	96906	4	PAOZZ	
		MS15795−806	2	WASHER	96906	8	PAOZZ	
		MS35649−264	2	NUT	96906	4	PAOZZ	
				− − − − − − − − −				
26−8	5A6TB1	600A−16	2	TERMINAL BLOCK	81349	1	PAOZZ	
26−9	5A6MS3	600J	3	JUMPER	26405	1	PAOZZ	
26−10	5A6MS5	600RJ3	3	JUMPER	26405	2	PAOZZ	
26−11	5A6MS4	600RJ5	3	JUMPER	26405	1	PAOZZ	
	NOTE * : SITE DEPENDENT							
	NOTE ** : NOT SHOWN							

FIGURE AND INDEX NO.	REF DES	PART NUMBER	INDENT	DESCRIPTION	CAGE CODE	QTY PER ASSY	CODES SMR	CODES USABLE ON
				(ATTACHING PARTS)				
		MS51957−32	2	SCREW	96906	4	PAOZZ	
		NAS620C6	2	WASHER	80205	4	PAOZZ	
		MS35338−136	2	WASHER	96906	4	PAOZZ	
		NAS671C6	2	NUT	80205	4	PAOZZ	
				− − − − − − − − −				
26−12	5A6W1	24636−1105−101	2	CABLE ASSEMBLY, DIGITAL BUS	1M813	1	PAOZZ	
26−13	5A6W2	34636−1106−101	2	CABLE ASSEMBLY, DC PWR BUS	1M813	1	PAOZZ	
26−14	5A6W3	44636−1116−102	2	HARNESS ASSEMBLY, DCU	1M813	1	PADDD	
26−15		1215264−201	2	LABEL (HIGH VOLTAGE)	56232	1	PAOZZ	
26−16	5A6W900 **	2320003−301	2	CABLE ASSEMBLY	0WY55	1	PAOZZ	
	NOTE * : SITE DEPENDENT NOTE ** : NOT SHOWN							

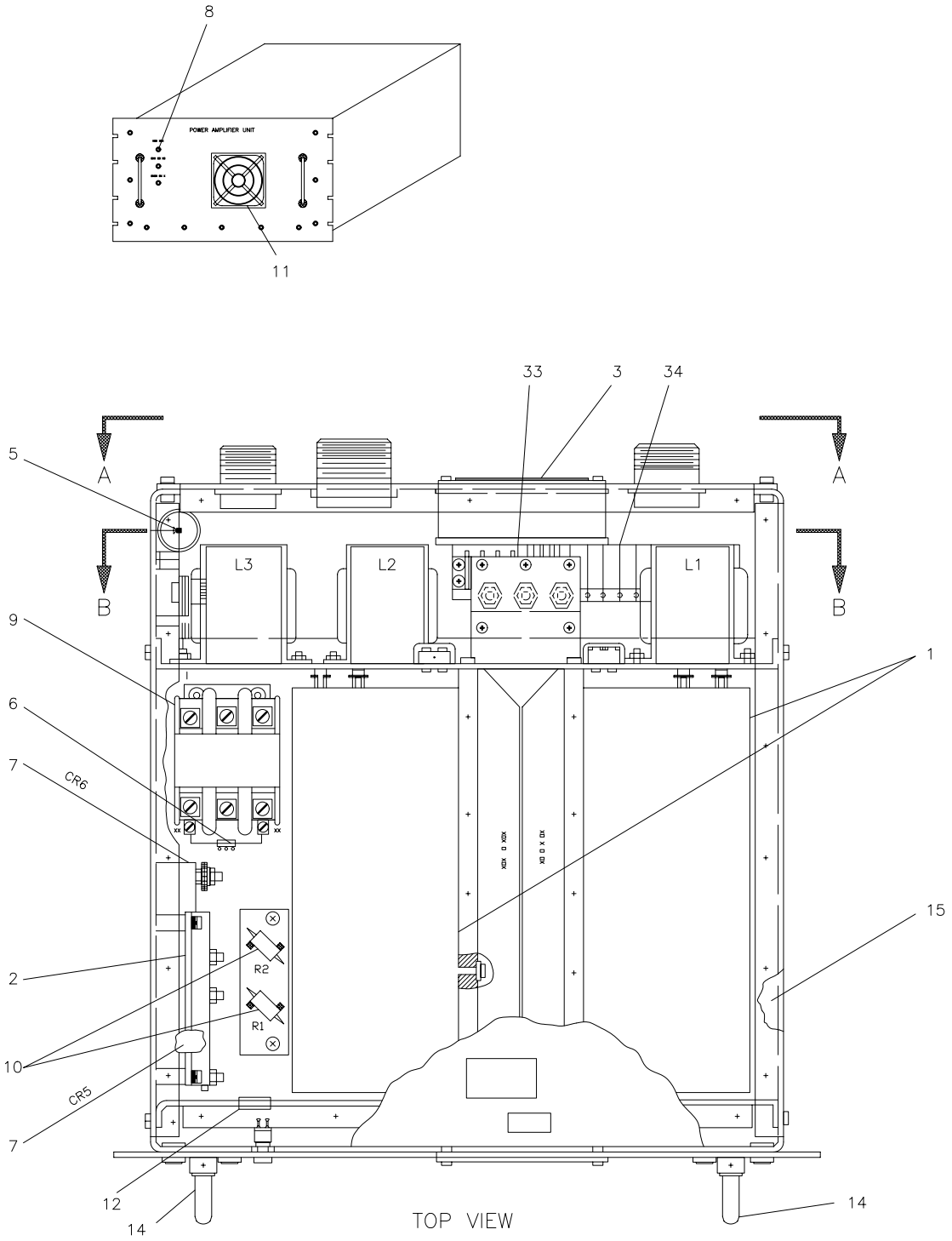

NX1162

FIGURE 27. Pedestal Power Amplifier, UD5A7 (Sheet 1 of 2)

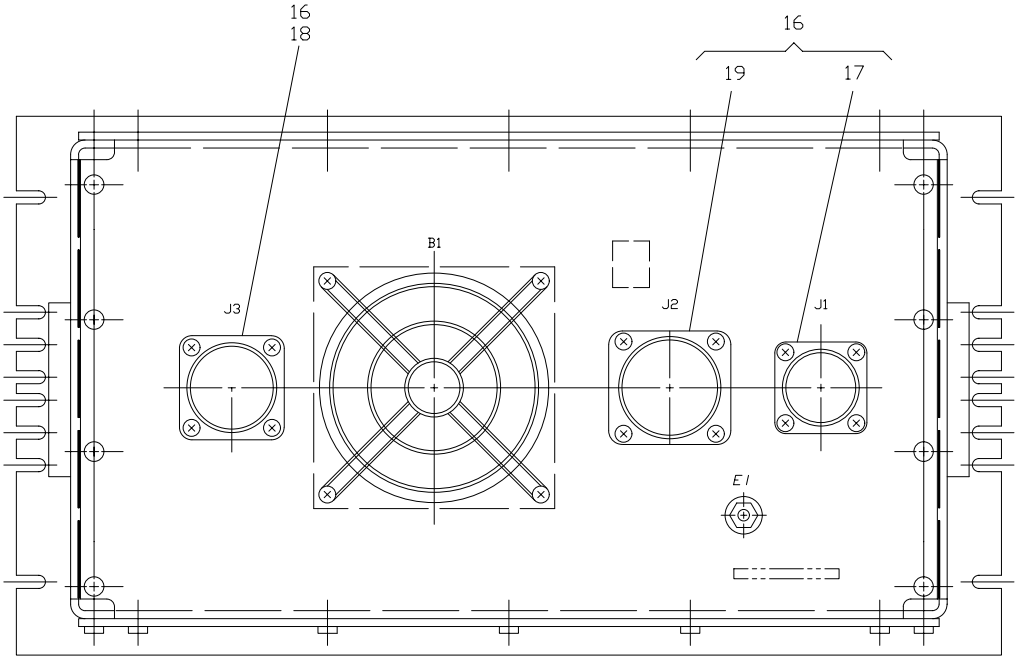

SECTION A-A

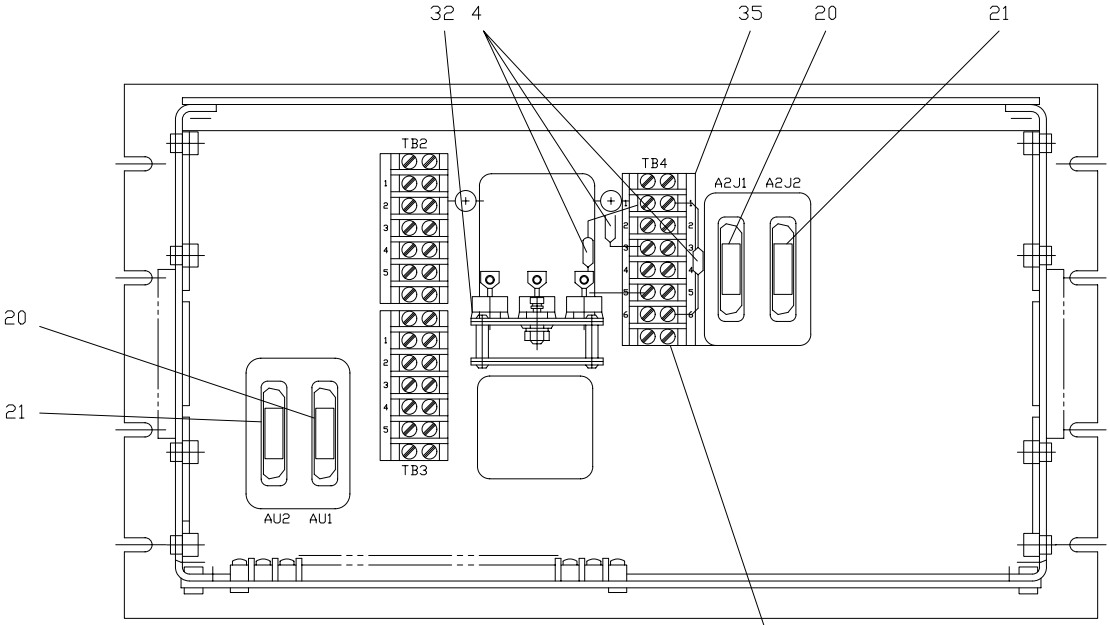

SECTION B-B

FSP

23
THRU
31

NX1163

FIGURE 27. Pedestal Power Amplifier, UD5A7 (Sheet 2 of 2)

FIGURE AND INDEX NO.	REF DES	PART NUMBER	INDENT	DESCRIPTION	CAGE CODE	QTY PER ASSY	CODES SMR	CODES USABLE ON
27−	5A7	54636−1003−102	1	PEDESTAL POWER AMPLIFIER UNIT (For NHA see FIGURE 20 on page 2 − 207)	1M813	REF	PBODD	
27−1	5A7A1 5A7A2	DCM−6000−200/30/45/CL	2	AMPLIFIER, POWER, 4KW (1M813) (spec dwg 34636−5016−1)	61773	2	PAOLD	
				(ATTACHING PARTS)				
		MS51957−66	2	SCREW	96906	16	PAOZZ	
		MS15795−808	2	WASHER	96906	16	PAOZZ	
		MS35338−138	2	WASHER	96906	16	PAOZZ	
				− − − − − − − − −				
27−2	5A7A3	44636−1303−101	2	PRINTED WIRING ASSEMBLY, HV MONITOR	1M813	1	PAOLD	
				(ATTACHING PARTS)				
		MS51958−63	2	SCREW	96906	4	PAOZZ	
		MS35338−138	2	WASHER	96906	4	PAOZZ	
		MS15795−808	2	WASHER	96906	4	PAOZZ	
				− − − − − − − − −				
27−3	5A7B1	028422	2	FAN, TUBEAXIAL	5Y921	1	PAOZZ	
				(ATTACHING PARTS)				
		MS51957−32	2	SCREW	96906	4	PAOZZ	
		MS35338−136	2	WASHER	96906	4	PAOZZ	
		NAS620C6	2	WASHER	80205	4	PAOZZ	
		MS35649−264	2	NUT	96906	4	PAOZZ	
				− − − − − − − − −				
27−4	5A7C3 THRU 5A7C5	431P104X92	2	CAPACITOR	56289	3	PAOZZ	
27−5	5A7C2	M39018/03−1298M	2	CAPACITOR	81349	1	PAOZZ	
27−6	5A7CR4	JANTX1N5552	2	SEMICONDUCTOR DEVICE	81349	1	PAOZZ	
27−7	5A7CR5 5A7CR6	SMCC44116C	2	SEMICONDUCTOR DEVICE	0U8A3	2	PAOZZ	
				(ATTACHING PARTS)				
		MS51959−51	2	SCREW	96906	6	PAOZZ	
		MS15795−807	2	WASHER	96906	6	PAOZZ	
		MS35338−137	2	WASHER	96906	6	PAOZZ	
	NOTE * :	NOT SHOWN						

FIGURE AND INDEX NO.	REF DES	PART NUMBER	INDENT	DESCRIPTION	CAGE CODE	QTY PER ASSY	CODES SMR	CODES USABLE ON
		MS35649−284	2	NUT	96906	6	PAOZZ	
				− − − − − − − − −				
27−8	5A7DS1 THRU 5A7DS3	1030QD3	2	LAMP, NEON	91802	3	PAOZZ	
27−9	5A7K1	P40P42D12P1−24	2	RELAY, 40 AMP, 3 PST−NO	77342	1	PAOZZ	
				(ATTACHING PARTS)				
		MS51958−63	2	SCREW	96906	4	PAOZZ	
		MS35338−138	2	WASHER	96906	4	PAOZZ	
		MS15795−808	2	WASHER	96906	4	PAOZZ	
		MS35650−304	2	NUT	96906	4	PAOZZ	
				− − − − − − − − −				
27−10	5A7R1 5A7R2	RER65FR100R	2	RESISTOR	81349	2	PAOZZ	
27−11	5A7MP6	06450−M	2	FILTER, AIR	0ACZ1	1	PAOZZ	
				(ATTACHING PARTS)				
		MS51957−31	2	SCREW	96906	4	PAOZZ	
		MS35338−136	2	WASHER	96906	4	PAOZZ	
		NAS620C6	2	WASHER	80205	4	PAOZZ	
		MS35649−264	2	NUT	96906	4	PAOZZ	
				− − − − − − − − −				
27−12		MS35489−40	2	GROMMET	96906	1	PCOZZ	
27−13	*	MS21266−3N	2	GROMMET	96906	3	PCOZZ	
27−14		M1095−2	2	HANDLE	04729	2	PAOZZ	
27−15		C−230−S−118	2	SLIDE, CHASSIS	06666	2	PAOZZ	
27−16	5A7W1	54636−1117−102	2	HARNESS	1M813	1	PAOOO	
27−17	5A7W1J1	MS3102R24−10P	3	CONNECTOR	96906	1	PAOZZ	
27−18	5A7W1J3	MS3452W28−9S	3	CONNECTOR	96906	1	PAOZZ	
27−19	5A7W1J2	MS3452W32−8P	3	CONNECTOR	96906	1	PADZZ	
27−20	5A7W1P1 5A7W1P3	DBMM5W5S	3	CONNECTOR	71468	2	PAOZZ	
27−21	5A7W1P2 5A7W1P4	M24308/2−3	3	CONNECTOR	81349	2	PAOZZ	
27−22	5A7W1P5 *	M24308/2−2F	3	CONNECTOR (00779) (ALT PN 205557−2)	81349	1	PAOZZ	
27−23		MS25036−154	3	TERMINAL LUG	96906	6	PAOZZ	
27−24		MS25036−106	3	TERMINAL LUG	96906	19	PAOZZ	

NOTE * : NOT SHOWN

FIGURE AND INDEX NO.	REF DES	PART NUMBER	INDENT	DESCRIPTION	CAGE CODE	QTY PER ASSY	CODES SMR	CODES USABLE ON
27−25		MS25036−102	3	TERMINAL LUG (98410) (ALT PN A532−06)	96906	17	PAOZZ	
27−26		MS25036−112	3	TERMINAL LUG	96906	3	PAOZZ	
27−27		MS25036−103	3	TERMINAL LUG	96906	3	PAOZZ	
27−28		MS25036−108	3	TERMINAL LUG	96906	5	PAOZZ	
27−29		MS25036−149	3	TERMINAL LUG	96906	2	PAOZZ	
27−30		C−836−06	3	LUG	98410	21	PAOZZ	
27−31		AA−8134	3	LUG	98410	2	PAOZZ	
27−32		34636−2055−1	2	BUS BAR	1M813	1	PAOZZ	
27−33		601RJ−3	2	JUMPER	26405	3	PAOZZ	
27−34	5A7TB1	38TB16F	2	TERMINAL BOARD	81349	1	PAOZZ	
27−35	5A7TB4	38TB6F	2	TERMINAL BOARD	81349	1	PAOZZ	
				(ATTACHING PARTS)				
		MS51957−32	2	SCREW	96906	8	PAOZZ	
		NAS620C6	2	WASHER	80205	4	PAOZZ	
		MS35338−136	2	WASHER	96906	8	PAOZZ	
		MS35649−264	2	NUT	96906	4	PAOZZ	
				− − − − − − − − −				
	NOTE * :	NOT SHOWN						

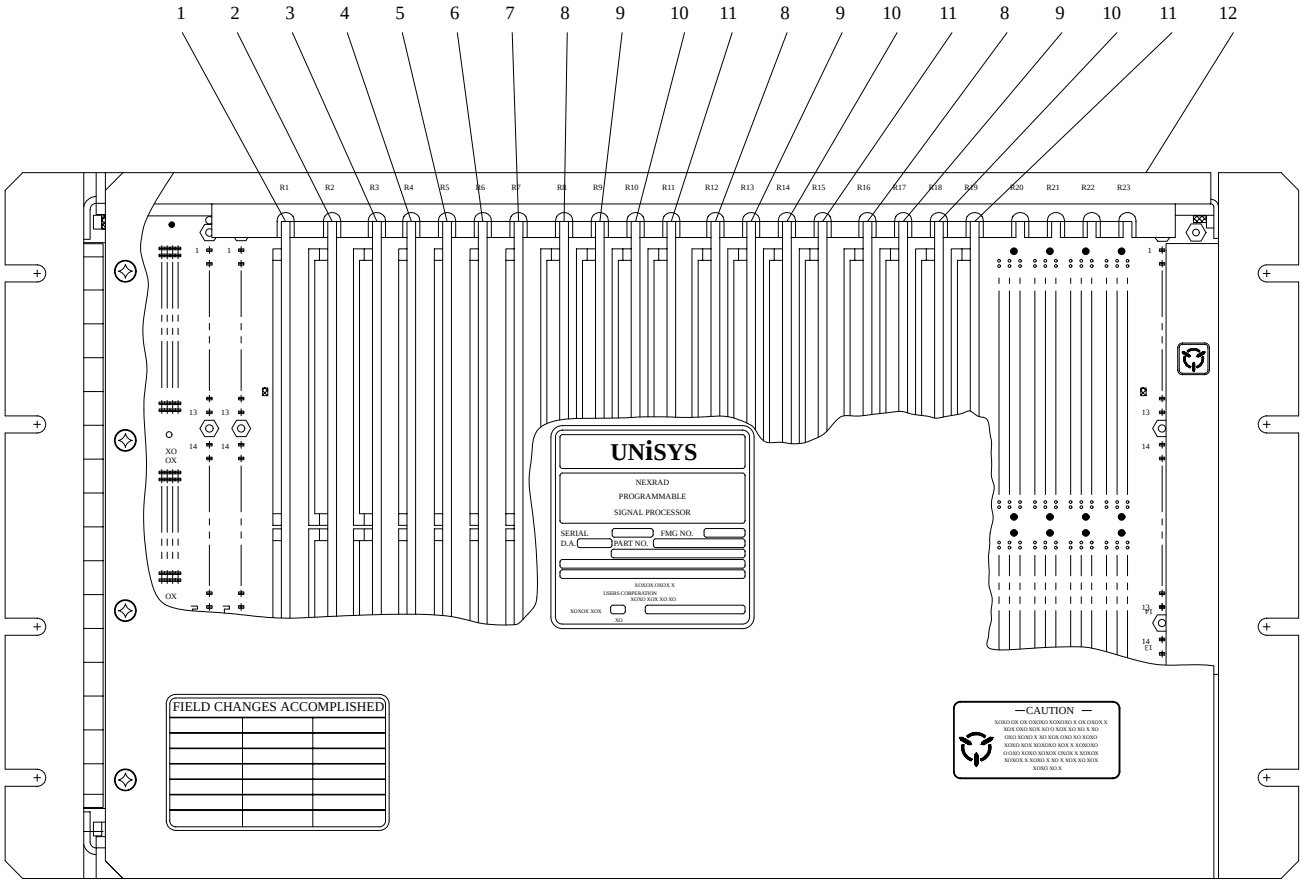

NX1164

FIGURE 28. Programmable Signal Processor, UD5A9

FIGURE AND INDEX NO.	REF DES	PART NUMBER	INDENT	DESCRIPTION	CAGE CODE	QTY PER ASSY	CODES	
							SMR	USABLE ON
28−	5A9	7339350−04	1	PROGRAMMABLE SIGNAL PROCESSOR (For NHA see FIGURE 20 on Page 2 − 207)	90536	REF	XB	
28−1	5A9A1	7328334−03	2	CIRCUIT CARD ASSEMBLY, INPUT SIGNAL CONDITIONER	90536	1	PAOLD	
28−2	5A9A2	7339439−01	2	CIRCUIT CARD ASSEMBLY, IOC CONTROLLER	90536	1	PAOLD	
28−3	5A9A3	7328340−01	2	CIRCUIT CARD ASSEMBLY, IOC OUTPUT MEMORY	90536	1	PAOLD	
28−4	5A9A4	7329942−00	2	CIRCUIT CARD ASSEMBLY, ACU 1−BUS INTERFACE UNIT	90536	1	PAOLD	
28−5	5A9A5	7329946−01	2	CIRCUIT CARD ASSEMBLY, ACU 2−MICROSEQUENCER	90536	1	PAOLD	
28−6	5A9A6	7180750−00	2	CIRCUIT CARD ASSEMBLY, ACU 3−REGISTER ALU	90536	1	PAOLD	
28−7	5A9A7	7257315−00	2	CIRCUIT CARD ASSEMBLY, ACU 4−MEMORY ADRS GENERATOR	90536	1	PAOLD	
28−8	5A9A8 5A9A12 5A9A16	7172737−01	2	CIRCUIT CARD ASSEMBLY, ARITHU 4−MEMORY	90536	3	PAOLD	
28−9	5A9A9 5A9A13 5A9A17	7257275−01	2	CIRCUIT CARD ASSEMBLY, ARITHU 1−INPUT MULTIPLEXER	90536	3	PAOLD	
28−10	5A9A10 5A9A14 5A9A18	7257279−00	2	CIRCUIT CARD ASSEMBLY, ARITHU 2−MULTIPLEXER/ACCUMULATOR	90536	3	PAOLD	
28−11	5A9A11 5A9A15 5A9A19	7257283−00	2	CIRCUIT CARD ASSEMBLY, ARITHU 3−OUTPUT SELECTOR	90536	3	PAOLD	
28−12	5A9A20	7339347−00	2	CHASSIS ASSEMBLY	90536	1	PAODD	

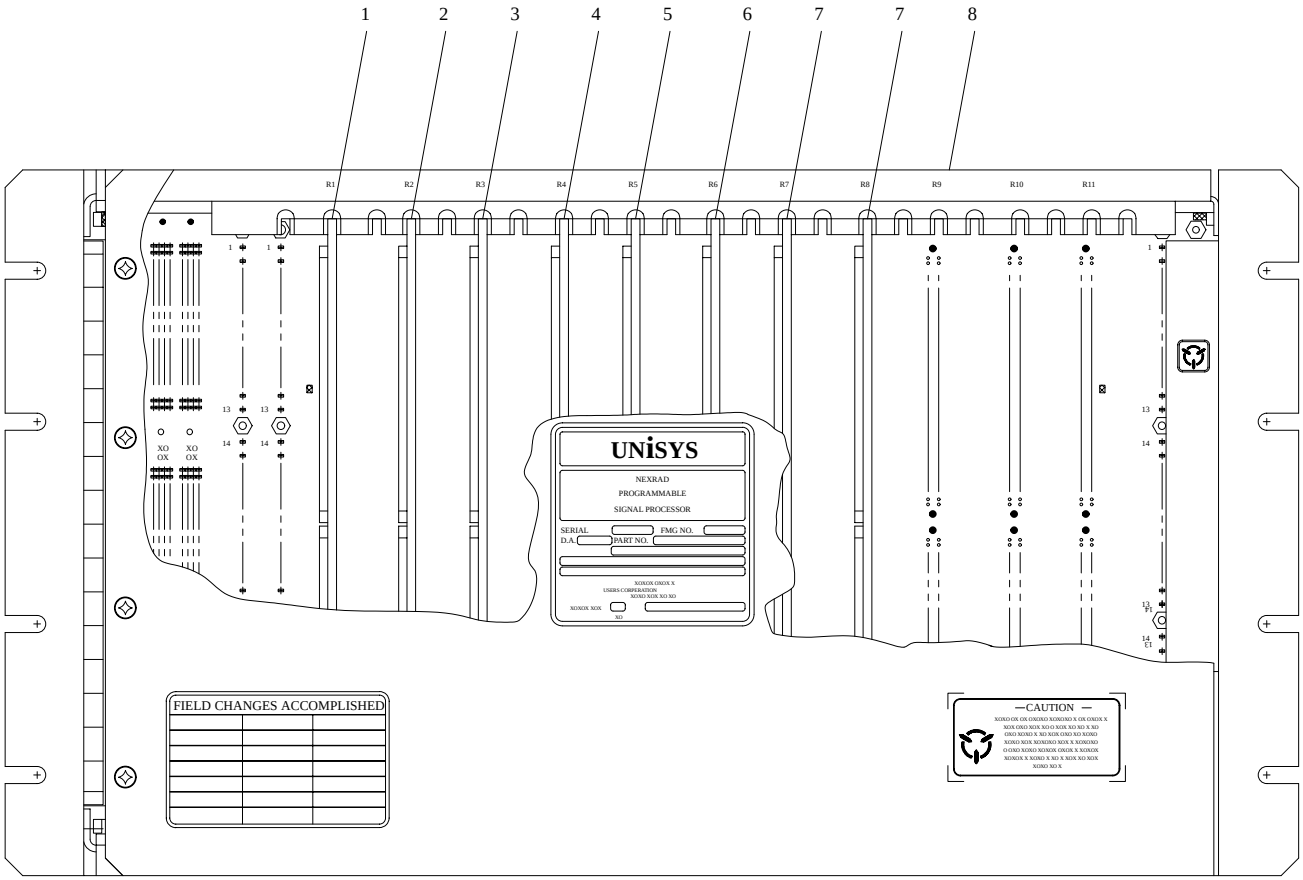

NX1165

FIGURE 29. Hardwired Signal Processor, UD5A10

FIGURE AND INDEX NO.	REF DES	PART NUMBER	INDENT	DESCRIPTION	CAGE CODE	QTY PER ASSY	CODES SMR	CODES USABLE ON
29−	5A10	7172770−02	1	SIGNAL PROCESSOR, HARDWIRED (For NHA see FIGURE 20 on Page 2 − 207)	90536	REF	XB	A
	5/105A10	7172770−03	1	SIGNAL PROCESSOR, HARDWIRED (For NHA see FIGURE 20 on Page 2 − 207)	90536	REF	XB	
29−1	5A10A1	7172745−01	2	CIRCUIT CARD ASSEMBLY, CONTROL INTERFACE A	90536	1	PAOLD	
29−2	5A10A2	7172757−02	2	CIRCUIT CARD ASSEMBLY, FILTER OUTPUT/CLUTTER MAP	90536	1	PAOLD	
29−3	5A10A3	7172749−02	2	CIRCUIT CARD ASSEMBLY, CONTROL INTERFACE B	90536	1	PAOLD	
29−4	5A10A4	7172765−02	2	CIRCUIT CARD ASSEMBLY, SYNCHRONIZER	90536	1	PAOLD	A
	5/105A10A4	7172765−03	2	CIRCUIT CARD ASSEMBLY, SYNCHRONIZER	90536	1	PAOLD	
29−5	5A10A5	7172753−01	2	CIRCUIT CARD ASSEMBLY, CONTROL INTERFACE C	90536	1	PAOLD	
29−6	5A10A6	7172761−00	2	CIRCUIT CARD ASSEMBLY, PRESCALER	90536	1	PAOLD	A
	5/105A10A6	7172761−01	2	CIRCUIT CARD ASSEMBLY, PRESCALER	90536	1	PAOLD	
29−7	5A10A7 5A10A8	7172741−02	2	CIRCUIT CARD ASSEMBLY, CLUTTER FILTER	90536	2	PAOLD	
29−8		7172777−01	2	CHASSIS ASSEMBLY	90536	1	PAODD	A
		7172777−02	2	CHASSIS ASSEMBLY	90536	1	PAODD	B

USABLE ON CODES

A − NON−REDUNDANT CONFIGURATION ONLY

B − REDUNDANT CONFIGURATION (CAN BE USED IN NON−REDUNDANT SYSTEMS)

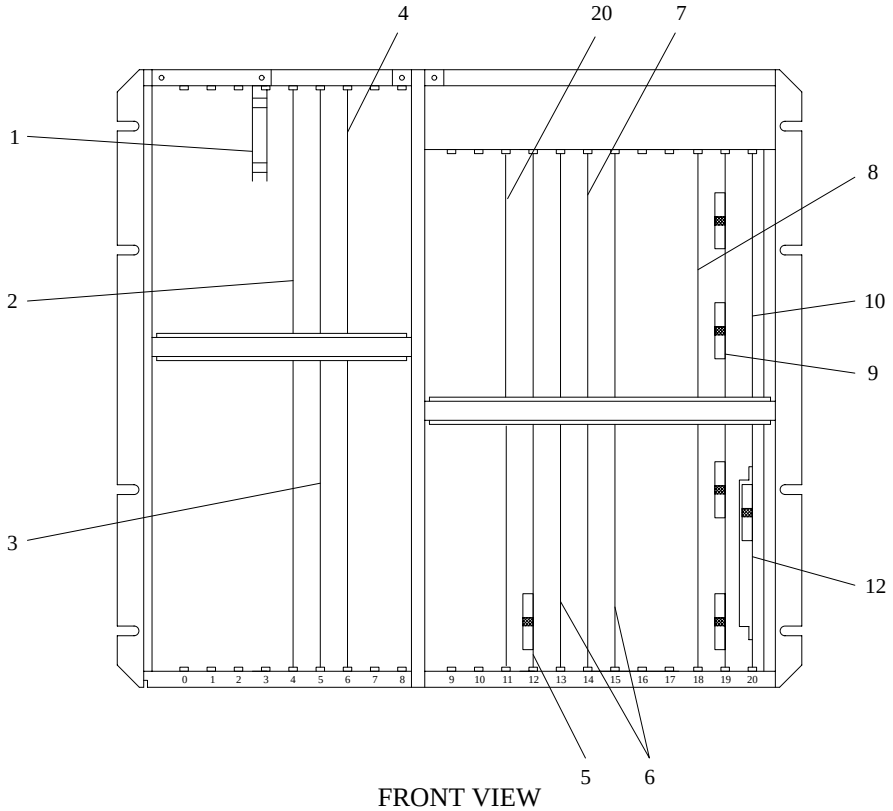

NX1166

FIGURE 30. M5/ES Chassis Assembly, RDA, UD5A12

FIGURE AND INDEX NO.	REF DES	PART NUMBER	INDENT	DESCRIPTION	CAGE CODE	QTY PER ASSY	CODES SMR	CODES USABLE ON
30−	5A12 **	92−616F00MXXRXX	1	M5/ES CHASSIS ASSEMBLY, RDA (For NHA SEE FIGURE 20 ON PAGE 2 − 207)	30331	REF	XB	
30−1	5A12A3 **	93−ABSF00MXXRXX	2	TEMP SENSE ASSEMBLY, UPPER CHASSIS	30331	1	PAOLD	
30−2	5A12A4 **	35−AAMF00MXXRXX	2	MICRO 5 PROCESSOR ASSEMBLY	30331	1	PAOLD	
30−3	5A12A5 **	35−941F00M01RXX	2	CIRCUIT CARD ASSEMBLY, DIRECT MEMORY INTERFACE	30331	1	PAOLD	
30−4	5A12A6 **	35−ABIF07MXXRXX	2	CIRCUIT CARD ASSEMBLY, CMM, 8MB	30331	1	PAOLD	
30−5	5A12A12 ** **	96−162F01M00R13 OR 96−162F01M01R06	2	CIRCUIT CARD ASSEMBLY, OPTICAL DISK CONTROLLER	30331	1	PAOLD	
30−6	5A12A13 ** 5A12A15	35−732F00MXXRXX	2	CIRCUIT CARD ASSEMBLY, SELECTOR CHANNEL	30331	2	PAOLD	
30−7	5A12A14 **	96−275F00MXXRXX	2	CIRCUIT CARD ASSEMBLY, PSPI	30331	1	PAOLD	
30−8	5A12A18	202660	2	MODULE, VCI−C (56232) (spec dwg 1222346−202)	65994	1	PAOLD	
30−9	5A12A19 **	35−702F00M02RXX	2	CIRCUIT CARD ASSEMBLY, COMM. MUX, 8 LINE	30331	1	PAOLD	
30−10	5A12A20A1	BTC−504	2	MODULE, CLOCK/CALENDAR (56232) (spec dwg 1213909−202)	62510	1	PAOLD	
30−11	5A12A20A1BT1 * 5A12A20A1BT2	BR2325	3	BATTERY	77542	2	PAOZZ	
30−12	5A12A20A2 **	96−217F00MXXRXX	2	CIRCUIT CARD ASSEMBLY, 8KB LSU W/AUTO RESTART	30331	1	PAOLD	
30−13	5A12A21 **	35−955F01MXXRXX	2	CIRCUIT CARD ASSEMBLY, CLOCK DISTRIBUTION, S BUS	30331	1	PAOLD	

NOTE * : NOT SHOWN

NOTE ** : REQUISITION HIGHEST REVISION LEVEL NSN MANAGED BY SOURCE OF SUPPLY (SOS) G13 OR S9_

FIGURE AND INDEX NO.	REF DES	PART NUMBER	INDENT	DESCRIPTION	CAGE CODE	QTY PER ASSY	CODES SMR	CODES USABLE ON
30−14	5A12AT3 ** 5A12AT4 5A12AT7 THRU 5A12AT10	35−813F01MXXRXX	2	CIRCUIT CARD ASSEMBLY, I/O TERMINATOR	30331	6	PAOZZ	
30−15	5A12AT5 **	35−814F01MXXRXX	2	CIRCUIT CARD ASSEMBLY, DMA TERMINATOR	30331	1	PAOZZ	
30−16	5A12AT6 **	35−814F02MXXRXX	2	CIRCUIT CARD ASSEMBLY, DMA TERMINATOR	30331	1	PAOZZ	
30−17	5A12AT1 **	35−886F00MXXRXX	2	CIRCUIT CARD ASSEMBLY, TERMINATOR, S BUS	30331	1	PAOLD	
30−18	5A12AT2 **	35−ADLF00MXXRXX	2	TERMINATOR BOARD	30331	1	PAOZZ	
30−19	**	17−989FXXMXXRXX	2	CABLE, TRANSMISSION, 40 FLAT	30331	1	PAOZZ	
30−20	5A12A11	202760−52	2	LEVEL II CONTROLLER (0WY55) (spec dwg 2200002−201)	65994	1	PAOLD	

NOTE * : NOT SHOWN

NOTE ** : REQUISITION HIGHEST REVISION LEVEL NSN MANAGED BY SOURCE OF SUPPLY (SOS) G13 OR S9_

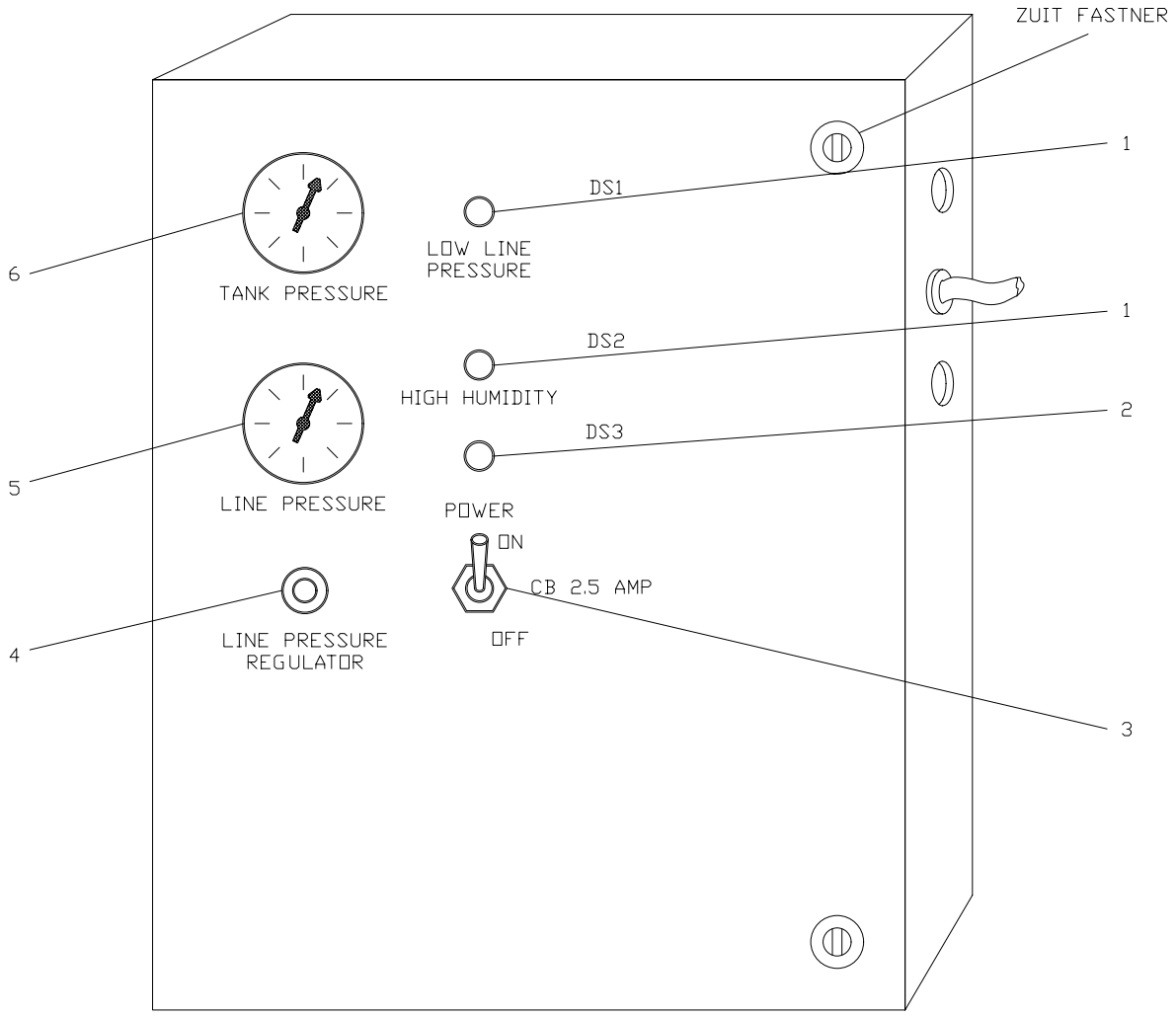

NX1167

FIGURE 31. Waveguide Pressurization Unit, UD6 (Sheet 1 of 2)

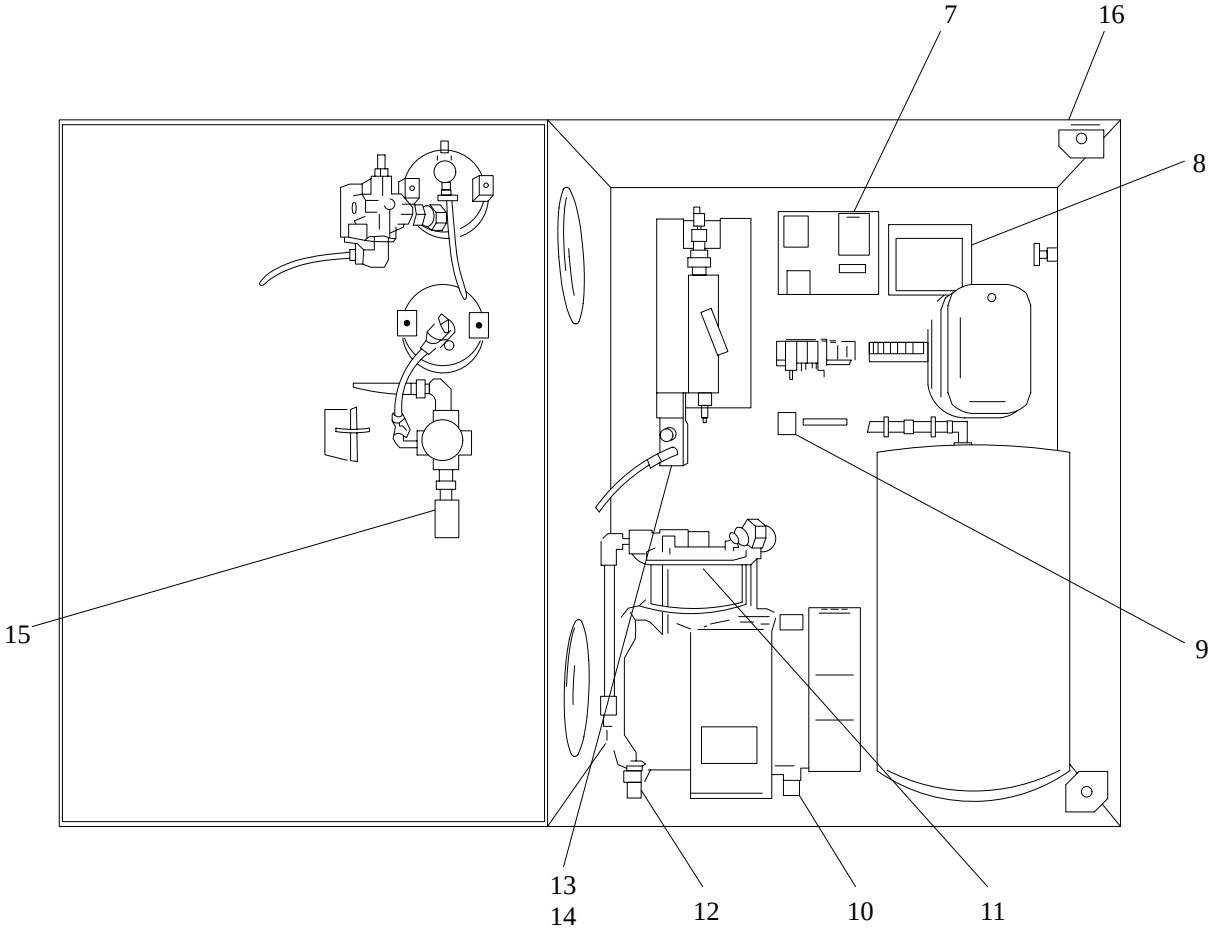

NX1168

FIGURE 31. Waveguide Pressurization Unit, UD6 (Sheet 2 of 2)

FIGURE AND INDEX NO.	REF DES	PART NUMBER	INDENT	DESCRIPTION	CAGE CODE	QTY PER ASSY	CODES SMR	CODES USABLE ON
31−	6	19331	1	PRESSURIZATION UNIT WAVEGUIDE, MODEL HA−4 (56232) (source ctrl dwg 1213660−201) (For NHA see FIGURE 2 on page 2 − 17)	08441	REF	PAODD	
31−1	6DS1 6DS2	13225	2	LAMP ASSEMBLY (WITH LAMPHOLDER)	08441	2	PAOZZ	
31−2	6DS3	13226	2	LAMP ASSEMBLY (WITH LAMPHOLDER)	08441	1	PAOZZ	
31−3	6CB1	32227	2	CIRCUIT BREAKER, 2.5 AMP	08441	1	PADZZ	
31−4	6M1	32163	2	REGULATOR, LINE PRESSURE	08441	1	PADZZ	
31−5	6M2	0005390013	2	GAUGE, LINE PRESSURE	08441	1	PADZZ	
31−6	6M3	0005390015	2	GAUGE, TANK PRESSURE	08441	1	PADZZ	
31−7	6H1	14701	2	HUMIDISTAT	08441	1	PADZZ	
31−8	6T1	14339	2	TIMER	08441	1	PADZZ	
31−9	6K1	14126	2	RELAY, ALARM	08441	1	PADZZ	
31−10	6MP2	32241	2	SHOCK MOUNT, SOFT	08441	1	PADZZ	
31−11	6MP10	35561	2	FILTER, COMPRESSOR	08441	1	PAOZZ	
31−12	6MP3	32242	2	SHOCK MOUNT, HARD	08441	1	PADZZ	
31−13	6L1	32936	2	VALVE, SOLENOID	08441	1	PADZZ	
31−14	6MP4	0022646002	2	MUFFLER, PURGE (18925) (ALT PN ASN−6)	08441	1	PAOZZ	
31−15	6S2	0060157001	2	SWITCH, ALARM, LOW PRESSURE (08441) (ALT PN 37007)	08441	1	PADZZ	
31−16		32239	2	CABINET	08441	1	XB	
31−17	6MP11 *	M6855/4−11H089	2	TUBING, RUBBER, SYNTHETIC	81349	AR	PCOZZ	
	NOTE * : NOT SHOWN							

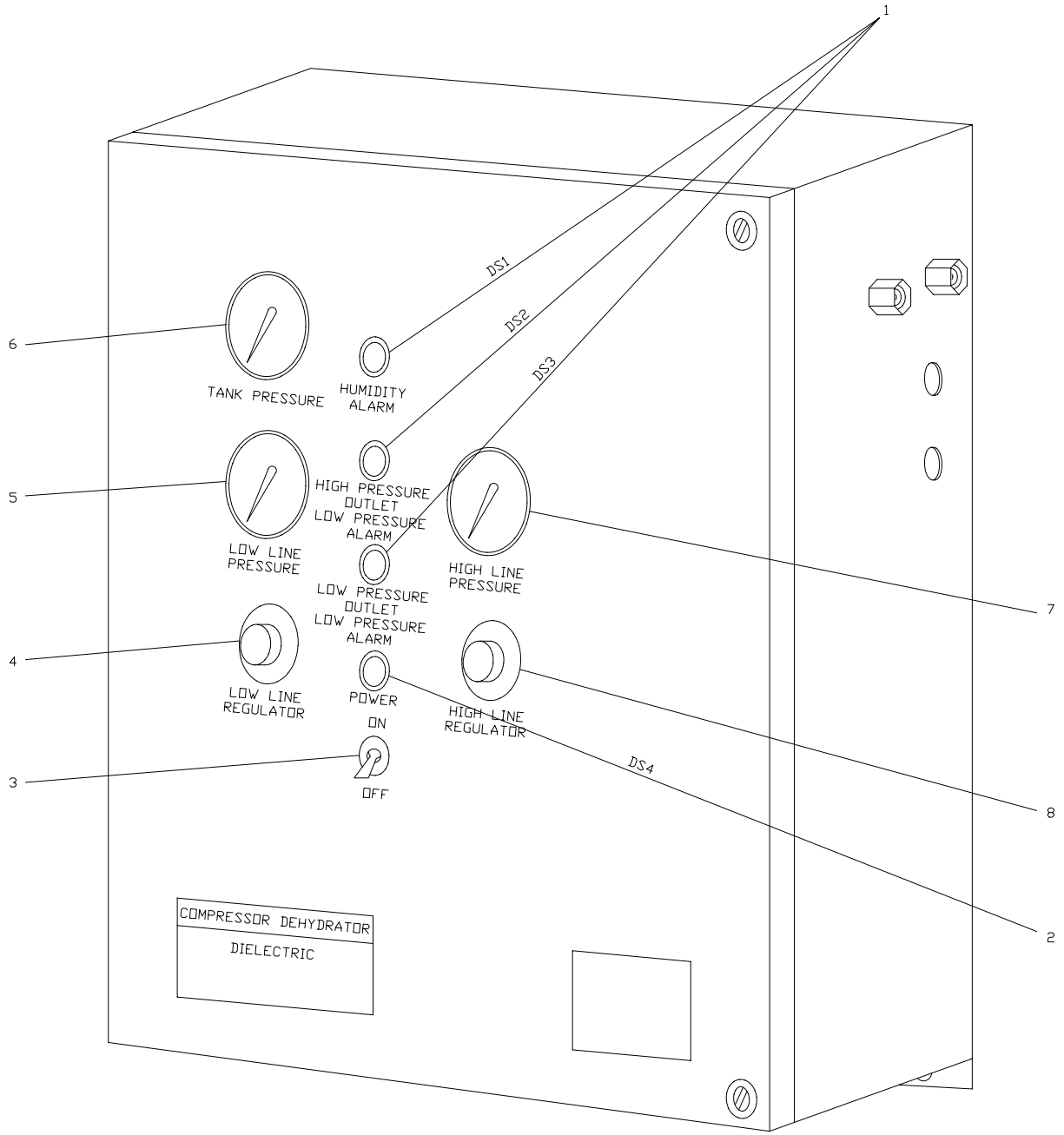

NX1169

FIGURE 32. Dual Outlet Waveguide Pressurization Unit, UD6 (Sheet 1 of 2)

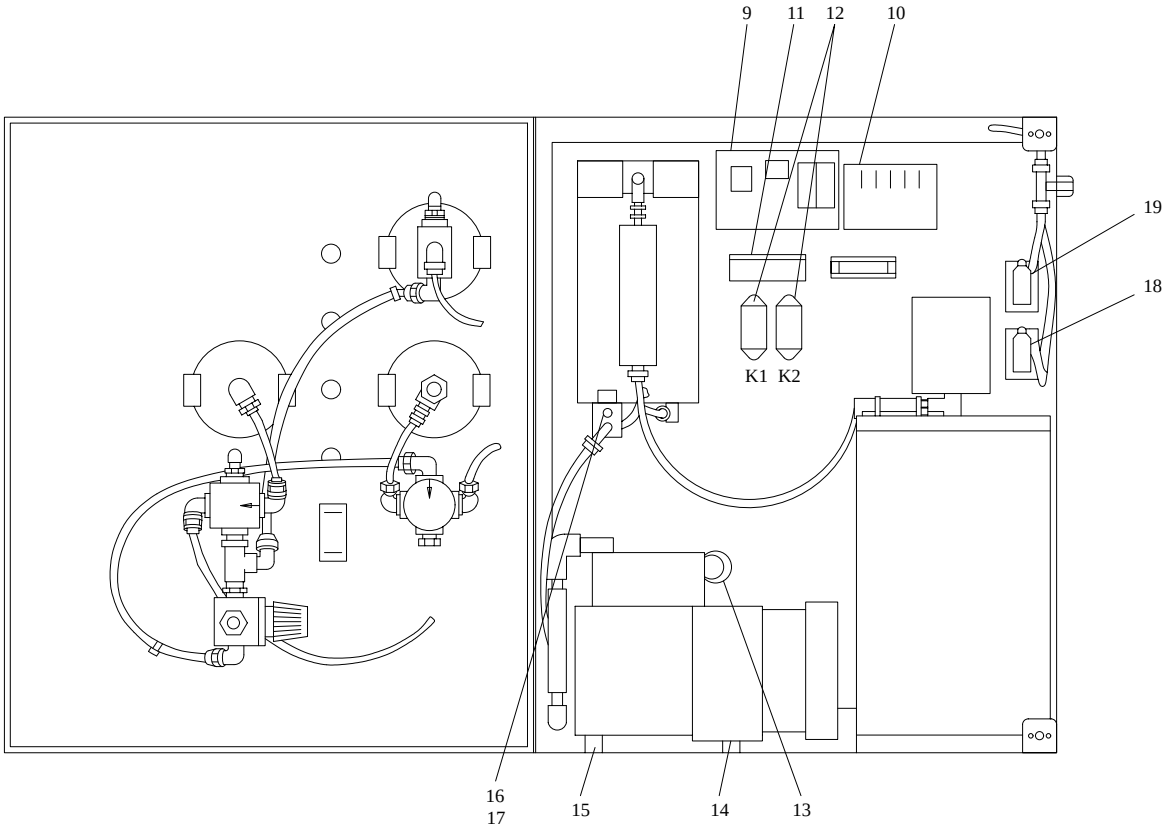

INSIDE OF CABINET

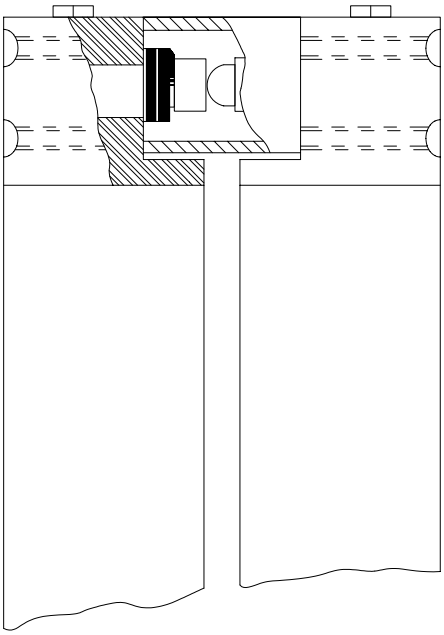

NX1170

DRYER ASSEMBLY

FIGURE 32. Dual Outlet Waveguide Pressurization Unit, UD6 (Sheet 2 of 2)

FIGURE AND INDEX NO.	REF DES	PART NUMBER	INDENT	DESCRIPTION	CAGE CODE	QTY PER ASSY	CODES SMR	CODES USABLE ON
32−	6D	40327	1	PRESSURIZATION UNIT, WAVEGUIDE, DUAL OUTLET, MODEL HA−4X2 (56232) (source ctrl dwg 1217035−201) (For NHA see FIGURE 2 on Page 2 − 17)	08441	REF	PAODD	
32−1	6D−DS1 THRU 6D−DS3	13225	2	LAMP ASSEMBLY (WITH LAMPHOLDER)	08441	3	PAOZZ	
32−2	6D−DS4	13226	2	LAMP ASSEMBLY (WITH LAMPHOLDER)	08441	1	PAOZZ	
32−3	6D−CB1	32227	2	CIRCUIT BREAKER, 2.5 AMP	08441	1	PADZZ	
32−4	6D−M1	32163	2	REGULATOR, LINE PRESSURE	08441	1	PADZZ	
32−5	6D−M2	0005390013	2	GAUGE, LINE PRESSURE	08441	1	PADZZ	
32−6	6D−M4	0005390016	2	GAUGE, TANK PRESSURE	08441	1	PADZZ	
32−7	6D−M3	0005390015	2	GAUGE, TANK PRESSURE	08441	1	PADZZ	
32−8	6D−M5	40328	2	REGULATOR HIGH PRESSURE	08441	1	PADZZ	
32−9	6D−H1	14701	2	HUMIDISTAT	08441	1	PADZZ	
32−10	6D−T1	14339	2	TIMER	08441	1	PADZZ	
32−11	6D−TB2	0015434606	2	TERMINAL BOARD, ALARM	08441	1	PADZZ	
32−12	6D−K1 6D−K2	14126	2	RELAY, ALARM	08441	2	PADZZ	
32−13	6D−MP10	35561	2	FILTER, COMPRESSOR	08441	1	PAOZZ	
32−14	6D−MP2	32241	2	SHOCK MOUNT, SOFT	08441	1	PADZZ	
32−15	6D−MP3	32242	2	SHOCK MOUNT, HARD	08441	1	PADZZ	
32−16	6D−L1	32936	2	VALVE, SOLENOID	08441	1	PADZZ	
32−17	6D−MP4	0022646002	2	MUFFLER, PURGE (18925) (ALT PN ASN−6)	08441	1	PAOZZ	
32−18	6D−S2	0060157001	2	SWITCH, ALARM, LOW PRESSURE (08441) (ALT PN 37007)	08441	1	PADZZ	
32−19	6D−S3	39985	2	SWITCH, ALARM, HIGH PRESSURE	08441	1	PADZZ	
32−20	6D−MP11 *	M6855/4−11H089	2	RUBBER TUBING	81349	AR	PCOZZ	
	NOTE * : NOT SHOWN							

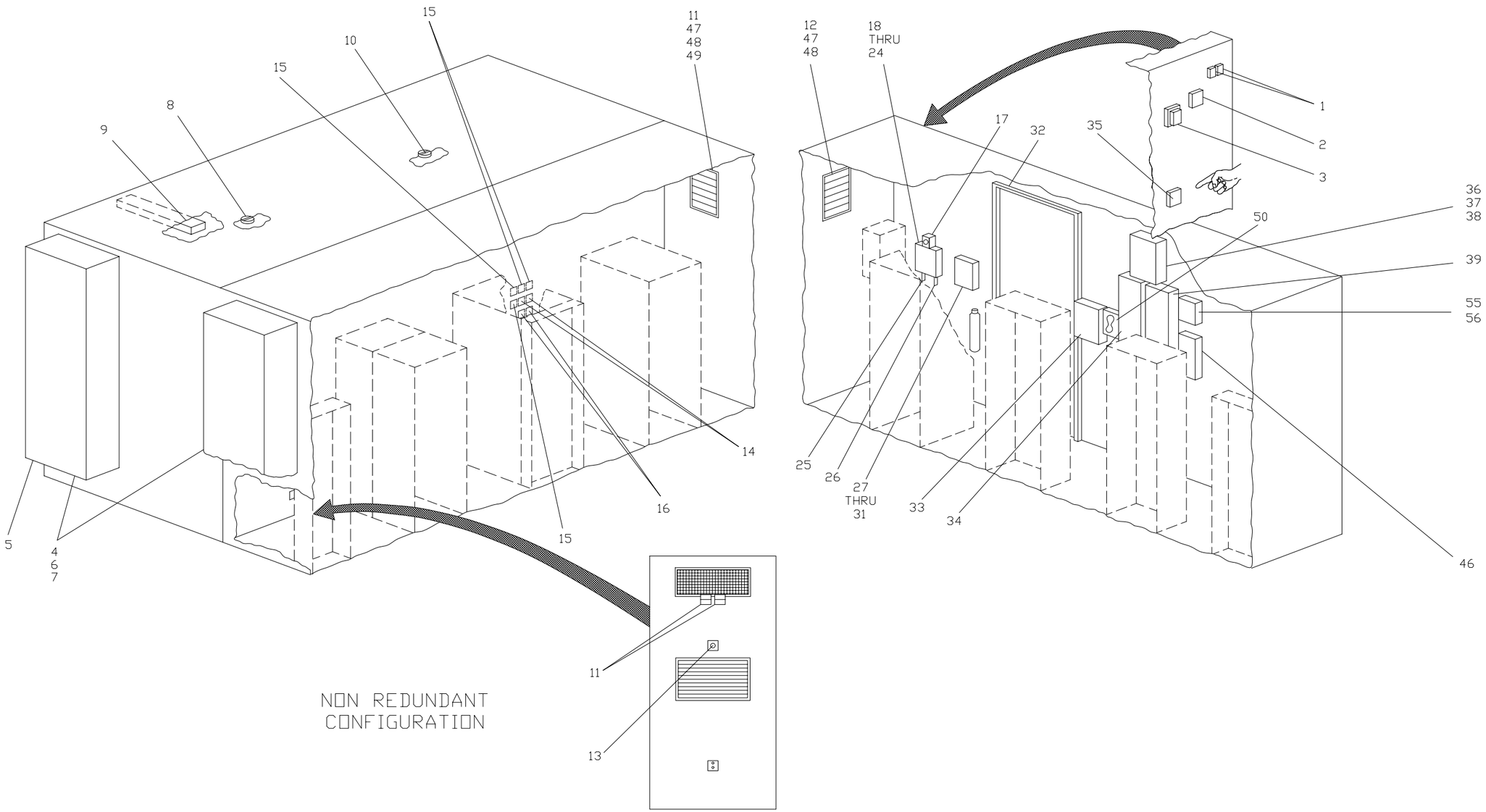

NX1171

FIGURE 33. Shelter, UD7 (Sheet 1 of 2)

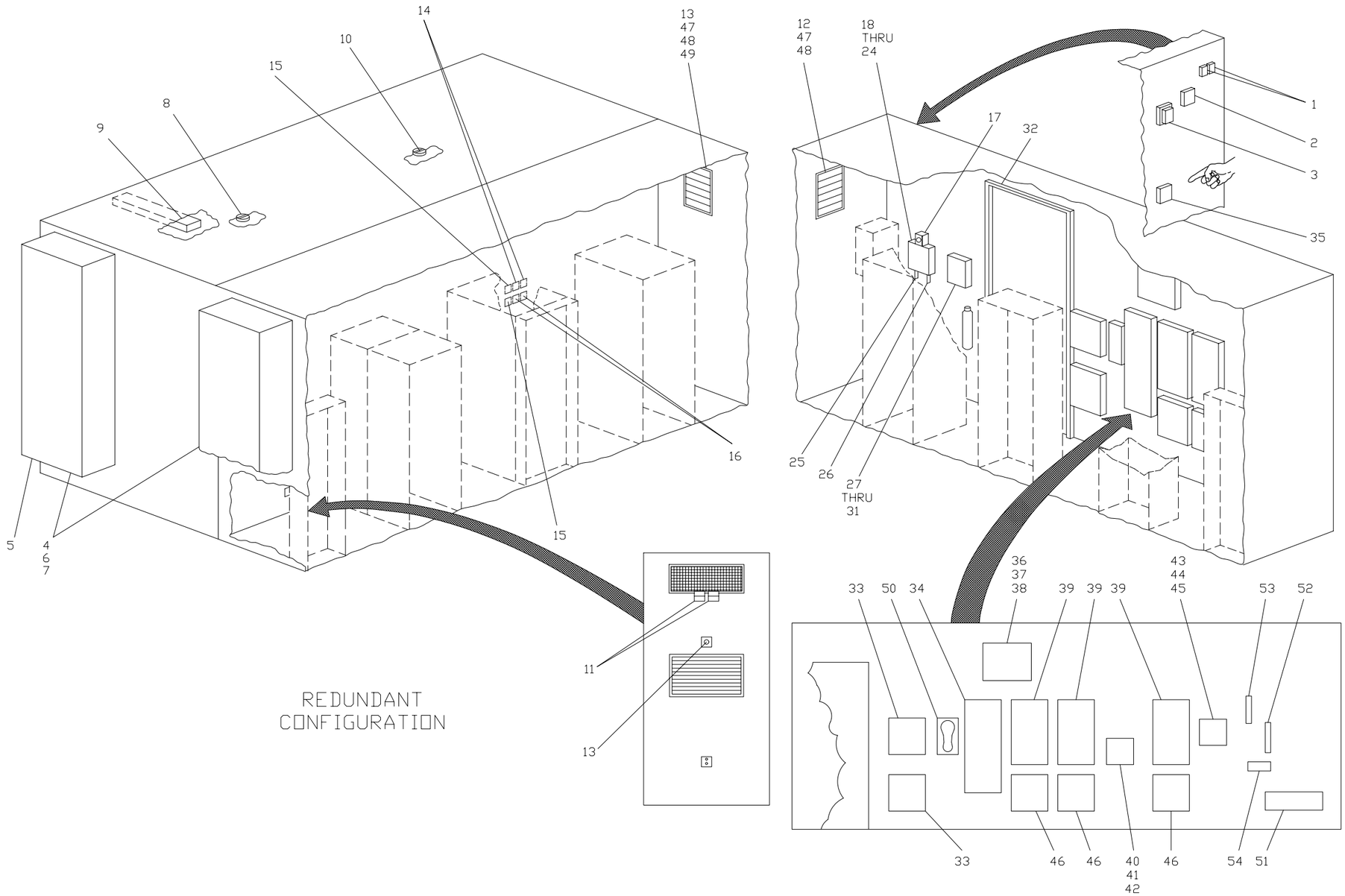

NX1172

FIGURE 33. Shelter, UD7 (Sheet 2 of 2)

FIGURE AND INDEX NO.	REF DES	PART NUMBER	INDENT	DESCRIPTION	CAGE CODE	QTY PER ASSY	CODES SMR	CODES USABLE ON
33−	7	D−1296	1	SHELTER (For NHA see FIGURE 2 on Page 2 − 17)	0E2J5	REF	XB	A
	7	D−1974	1	SHELTER (For NHA see FIGURE 2 on Page 2 − 17)	0E2J5	REF	XB	B
	7	D−1172	1	SHELTER (For NHA see FIGURE 2 on Page 2 − 17)	0E2J5	REF	XB	C
	7	D−1437	1	SHELTER, REDUNDANT (For NHA see FIGURE 2 on Page 2 − 17)	0E2J5	REF	XB	D
	7	D−2241	1	SHELTER, REDUNDANT (For NHA see FIGURE 2 on Page 2 − 17)	0E2J5	REF	XB	E
33−1	7A22	743−PF−4150 (−58 TO 120F)	2	SENSOR, EXTERIOR TEMPERATURE, −58 TO 120 DEG F	33969	1	PAOZZ	
	7A52	743−PF−4150 (−58 TO 120F)	2	SENSOR, EXTERIOR TEMPERATURE, −58 TO 120 DEG F	33969	1	PAOZZ	D E
33−2	7DS1	7−010−0308	2	STROBE LIGHT, PLAIN	1CSX7	1	PAOZZ	
33−3	7DS2	3650	2	EXTERIOR LIGHT (0E2J5) (ALT PN 10278)	52770	1	PAOZZ	
33−4	7AC1 7AC2 *	60WA−B09	2	AIR CONDITIONER UNIT (ACU)	52359	2	XB	A B C
	7AC1 7AC2 *	WA601−B09	2	AIR CONDITIONER UNIT (ACU)	52359	2	XB	D E
33−5	*	ECW−4A	3	KIT, ECONOMIZER, AIR CONDITIONER (USED WITH MODELS 60WA AIR CONDITIONERS)	52359	1	XB	A B C
	*	EIFM−5	3	KIT, ECONOMIZER, AIR CONDITIONER (USED WITH MODELS WA601 AIR CONDITIONERS)	52359	1	XB	D E

NOTE * : SITE DEPENDENT

NOTE ** : REPLACE POWER SUPPLY P/N 21077 WITH SAME UNTIL STOCK IS EXHAUSTED; THEREAFTER, SITES REPLACING P/N 21077 WITH P/N MU250−60 MUST INSTALL MOUNTING BRACKET P/N 23285. EITHER UPS CAN BE MOUNTED ON MOUNTING BRACKET P/N 23285.

NOTE *** : TEMPERATURE RANGE IS A REQUIRED COMPONENT OF THE PART NUMBER.

NOTE **** : NOT SHOWN

FIGURE AND INDEX NO.	REF DES	PART NUMBER	INDENT	DESCRIPTION	CAGE CODE	QTY PER ASSY	CODES SMR	CODES USABLE ON
33−6	7AC1MP1 7AC2MP1	7004−016	3	FILTER, AC, 20X30X1 (0EJ25) (ALT PN 13547)	52359	2	PAOZZ	
33−7	7AC1MP1−1 7AC2MP1−1	004−0272619	3	FILTER, AC, 20X30X2	52359	2	PAOZZ	H
33−8	7A17	7−010−0435	2	SMOKE DETECTOR	1CSX7	1	PAOZZ	
	7A47	7−010−0435	2	SMOKE DETECTOR	1CSX7	1	PAOZZ	D E
33−9	7DS3 THRU 7DS8	CA−2224−4	2	FLUORESCENT LIGHT FIXTURE	56950	6	XB	
33−10	7A23	7−010−0434	2	IONIZATION DETECTOR	1CSX7	1	PAOZZ	
	7A53	7−010−0434	2	IONIZATION DETECTOR	1CSX7	1	PAOZZ	D E
33−11	7A18 *** 7A19	733−PF−U−8/4150 (32 TO 122F)	2	DISCHARGE SENSOR, 32 TO 122 DEG F	33969	2	PAOZZ	
	7A48 *** 7A49	733−PF−U−8/4150 (32 TO 122F)	2	DISCHARGE SENSOR, 32 TO 122 DEG F	33969	2	PAOZZ	D E
33−12	7A21 ***	733−PF−U−8/4150 (14 TO 140F)	2	DISCHARGE SENSOR, TRANSMITTER, 14 TO 140 DEG F	33969	1	PAOZZ	
	7A51 ***	733−PF−U−8/4150 (14 TO 140F)	2	DISCHARGE SENSOR, TRANSMITTER, 14 TO 140 DEG F	33969	1	PAOZZ	D E
33−13	7A14 THRU 7A16	S830A1005−1	2	INDICATOR, CLOGGED FILTER	27319	3	PAOZZ	
	7A44	S830A1005−1	2	INDICATOR, CLOGGED FILTER	27319	1	PAOZZ	D E
33−14	7S3 * 7S4	T874B1019	2	THERMOSTAT	27319	2	PAOZZ	
33−15	7S5 * 7S35	2E206	2	THERMOSTAT, TRANSMITTER (0E2J5) (ALT PN 10877)	25795	2	PAOZZ	
33−16	7A20	753−PB/XO (32 to 122)	2	SENSOR, INTERIOR TEMPERATURE, 32 TO 122 DEG F	33969	1	PAOZZ	

NOTE * : SITE DEPENDENT

NOTE ** : REPLACE POWER SUPPLY P/N 21077 WITH SAME UNTIL STOCK IS EXHAUSTED; THEREAFTER, SITES REPLACING P/N 21077 WITH P/N MU250−60 MUST INSTALL MOUNTING BRACKET P/N 23285. EITHER UPS CAN BE MOUNTED ON MOUNTING BRACKET P/N 23285.

NOTE *** : TEMPERATURE RANGE IS A REQUIRED COMPONENT OF THE PART NUMBER.

NOTE **** : NOT SHOWN

FIGURE AND INDEX NO.	REF DES	PART NUMBER	INDENT	DESCRIPTION	CAGE CODE	QTY PER ASSY	CODES SMR	CODES USABLE ON
	7A50	753−PB/XO (32 to 122)	2	SENSOR, INTERIOR TEMPERATURE, 32 TO 122 DEG F	33969	1	PAOZZ	D E
33−17	7A4	7−003−0126	2	VIBRATING ALARM HORN	1CSX7	1	PAOZZ	
33−18	7A5 *	7−010−0363	2	FIRE SUPPRESSION SYSTEM	1CSX7	1	XC	
33−19	7A5A1 *	7−010−0450	3	PRINTED CIRCUIT BOARD	1CSX7	1	PAODD	
33−20	7A5BT1 * 7A5BT2	PS−1270	3	BATTERY 12 VDC 6.5AH	56309	2	PCOZZ	
33−21	7A5T1 *	7−010−0371	3	TRANSFORMER	1CSX7	1	XB	
33−22	7A5A2	7−010−0448	2	ENCLOSURE, FIRE SUPPRESSION ASSEMBLY	1CSX7	1	PAOZZ	
33−23	7A5K1	7−015−0179	2	RELAY, AUXILIARY	1CSX7	1	PAOZZ	
33−24	7A5PS1	7−010−0449	2	POWER SUPPLY, 24V	1CSX7	1	PAOZZ	
33−25	7A7	2−010−0144	2	MANUAL ABORT STATION	1CSX7	1	PAODD	
33−26	7A6	2−010−0142	2	MANUAL DISCHARGE STATION	1CSX7	1	PAOZZ	
33−27		19948	2	SECURITY ALARM ASSEMBLY	0E2J5	1	XB	
33−28	7A12	A−12N126	3	SECURITY PANEL	00843	1	XB	
33−29	7A12K1 THRU 7A12K3	5X840	3	RELAY	25795	3	PAOZZ	
33−30	7A12XK1 THRU 7A12XK3	5X853	3	SOCKET, RELAY	25795	3	PAOZZ	
33−31	7A12T1	E060E	3	TRANSFORMER, 120/24 VAC	28455	1	PAOZZ	
33−32	7S1	39−2GY	2	SWITCH, DOOR ALARM, MAGNETIC (0E2J5) (ALT PN 13272)	33240	1	PAOZZ	
33−33	7A1 * 7A24	A16N16A	2	UTILITIES JUNCTION BOX	00843	2	XB	

NOTE * : SITE DEPENDENT

NOTE ** : REPLACE POWER SUPPLY P/N 21077 WITH SAME UNTIL STOCK IS EXHAUSTED; THEREAFTER, SITES REPLACING P/N 21077 WITH P/N MU250−60 MUST INSTALL MOUNTING BRACKET P/N 23285. EITHER UPS CAN BE MOUNTED ON MOUNTING BRACKET P/N 23285.

NOTE *** : TEMPERATURE RANGE IS A REQUIRED COMPONENT OF THE PART NUMBER.

NOTE **** : NOT SHOWN

FIGURE AND INDEX NO.	REF DES	PART NUMBER	INDENT	DESCRIPTION	CAGE CODE	QTY PER ASSY	CODES SMR	CODES USABLE ON
33−34	7A2	PB424CC200 1 NB	2	MAIN POWER PANEL	08372	1	XB	A B C E
	7A2	PB424CC225 1 NB	2	MAIN POWER PANEL	08372	1	XB	D
33−35	7S7	49−515	2	SECURITY ALARM KEY SWITCH (02929) (ALT PN 81F1312) (09353) (ALT PN Y101132C203NQ)	62676	1	PAOZZ	
33−36	7A11	CPS II 120W OR CPS120W	2	SURGE SUPPRESSOR (29779) (ALT PN 1800A−120Y) (56232) (spec dwg 1217803−201)	30992	1	PAODD	
33−37	7A11A1	CPS II 120	3	MODULE, SURGE SUPPRESSOR MODEL 1000−426	30992	1	PAOLD	
33−38	7A11MP1	25P−326R	3	LENS, LIGHT (RED)	71744	3	PAOZZ	
33−39	7A3 *	PB304ML125 1 NB	2	SECONDARY POWER DISTRIBUTION PANEL	08372	1	XB	
	7A29 *	PB304ML125 1 NB	2	SECONDARY POWER DISTRIBUTION PANEL	08372	1	XB	D E
	7A30 *	PB304ML125 1 NB	2	SECONDARY POWER DISTRIBUTION PANEL	08372	1	XB	E
33−40	7A68	CPS II 120W OR CPS120W	2	SURGE SUPPRESSOR (29779) (ALT PN 1800A−120Y) (56232) (spec dwg 1217803−201)	30992	1	PAODD	D E
33−41	7A68A1	CPS II 120	3	MODULE, SURGE SUPPRESSOR MODEL 1000−426	30992	1	PAOLD	D E
33−42	7A68MP1	25P−326R	3	LENS, LIGHT (RED)	71744	3	PAOZZ	D E
33−43	7A69	CPS II 120W OR CPS120W	2	SURGE SUPPRESSOR (29779) (ALT PN 1800A−120Y) (56232) (spec dwg 1217803−201)	30992	1	PAODD	E

NOTE * : SITE DEPENDENT

NOTE ** : REPLACE POWER SUPPLY P/N 21077 WITH SAME UNTIL STOCK IS EXHAUSTED; THEREAFTER, SITES REPLACING P/N 21077 WITH P/N MU250−60 MUST INSTALL MOUNTING BRACKET P/N 23285. EITHER UPS CAN BE MOUNTED ON MOUNTING BRACKET P/N 23285.

NOTE *** : TEMPERATURE RANGE IS A REQUIRED COMPONENT OF THE PART NUMBER.

NOTE **** : NOT SHOWN

FIGURE AND INDEX NO.	REF DES	PART NUMBER	INDENT	DESCRIPTION	CAGE CODE	QTY PER ASSY	CODES SMR	CODES USABLE ON
33−44	7A69A1	CPS II 120	3	MODULE, SURGE SUPPRESSOR MODEL 1000−426	30992	1	PAOLD	E
33−45	7A69MP1	25P−326R	3	LENS, LIGHT (RED)	71744	3	PAOZZ	E
33−46	7S6 *	2500031−301	2	CONTACTOR, MAGNETIC, MODIFIED	0WY55	1	PAOZZ	
	7S36 *	2500031−301	2	CONTACTOR, MAGNETIC, MODIFIED	0WY55	2	PAOZZ	D E
	7S37 *	2500031−301	2	CONTACTOR, MAGNETIC, MODIFIED	0WY55	2	PAOZZ	E
				(ATTACHING PARTS)				
	7S6MP1	S130NG11CAD12 155NNEF1	2	SCREW, SEMS, HELICAL SPRING LW	05047	4	PADZZ	
				− − − − − − − − −				
33−47	7A9 * 7A10	CD40−22″X22″	2	MOTORIZED DAMPER ASSEMBLY, EXHAUST	34081	2	XB	
	7A39 * 7A40	CD40−22″X22″	2	MOTORIZED DAMPER ASSEMBLY, EXHAUST	34081	2	XB	D E
33−48	7A9B1 * 7A10B1	MA−418−0−0−2 OR MA−418−0−0−3	3	MOTOR, ACTUATOR (0E2J5) (ALT PN 11985)	65149	2	PAOZZ	
	7A39B1 * 7A40B1	MA−418−0−0−2 OR MA−418−0−0−3	3	MOTOR, ACTUATOR (0E2J5) (ALT PN 11985)	65149	2	PAOZZ	D E
33−49	7MP3−1 *	601−215	2	FILTER, TRANSMITTER, 18”X20”X2”	9R269	2	PAOZZ	G
	7MP3 *	18X18X1	2	FILTER, TRANSMITTER	82127	2	PAOZZ	D E F
33−50	7A28 *	43−456A	2	INTERCOM STATION, TELEPHONE AND 2−WAY INTERCOM SYSTEM (Replaces PN 43−616)	62676	1	PAOZZ	
	7A28−1 *	SPS−210	2	INTERCOM STATION, SOUND POWERED	56093	1	PAOZZ	

NOTE * : SITE DEPENDENT

NOTE ** : REPLACE POWER SUPPLY P/N 21077 WITH SAME UNTIL STOCK IS EXHAUSTED; THEREAFTER, SITES REPLACING P/N 21077 WITH P/N MU250−60 MUST INSTALL MOUNTING BRACKET P/N 23285. EITHER UPS CAN BE MOUNTED ON MOUNTING BRACKET P/N 23285.

NOTE *** : TEMPERATURE RANGE IS A REQUIRED COMPONENT OF THE PART NUMBER.

NOTE **** : NOT SHOWN

FIGURE AND INDEX NO.	REF DES	PART NUMBER	INDENT	DESCRIPTION	CAGE CODE	QTY PER ASSY	CODES SMR	CODES USABLE ON
33−51	* **	21977	2	INTERCOM, POWER SUPPLY, UNINTERRUPTED	0E2J5	1	PAOZZ	
	7PS1	MU250−60HZ	2	INTERCOM, POWER SUPPLY, UNINTERRUPTED	55455	1	PAOZZ	
		23301	2	INTERCOM, POWER SUPPLY, UNINTERRUPTED	0E2J5	1	PAOZZ	
	7PS1MP1	23285	2	UPS MOUNTING BRACKET	0E2J5	1	PAOZZ	
33−52	7TB1	R66CB16	2	TERMINAL BOARD, 12 POSITION	77554	1	PAOZZ	
33−53	7TB2	R700A−66−B1−A25	2	TERMINAL BLOCK	2Y806	1	PAOZZ	
33−54	7TB8	274−657	2	TERMINAL BLOCK	62676	1	PAOZZ	
33−55	7TPS1	EHB125NS	2	ENCLOSURE, NEMA, CIRCUIT BREAKER	56365	1	PAOZZ	A B
33−56	7TPS1CB1	EHB14015	3	CIRCUIT BREAKER	63637	1	PAOZZ	A B
33−57	7MP1 ****	93K7AB15D−STK−626−RH	2	KNOB, DOOR, SHELTER	70019	1	PAOZZ	
33−58	****	11364	2	WEATHER STRIP, SHELTER	0E2J5	1	PAOZZ	

USABLE ON CODES

A − 18 FOOT RDA SHELTER
B − 24 FOOT RDA SHELTER
C − RDA/RPG (COLLOCATED) SHELTER
D − REDUNDANT SHELTER, FAA
E − REDUNDANT SHELTER, NWS
F − FSP
G − LPP
H − EXTREMELY DIRTY ENVIRONMENT

NOTE * : SITE DEPENDENT

NOTE ** : REPLACE POWER SUPPLY P/N 21077 WITH SAME UNTIL STOCK IS EXHAUSTED; THEREAFTER, SITES REPLACING P/N 21077 WITH P/N MU250−60 MUST INSTALL MOUNTING BRACKET P/N 23285. EITHER UPS CAN BE MOUNTED ON MOUNTING BRACKET P/N 23285.

NOTE *** : TEMPERATURE RANGE IS A REQUIRED COMPONENT OF THE PART NUMBER.

NOTE **** : NOT SHOWN

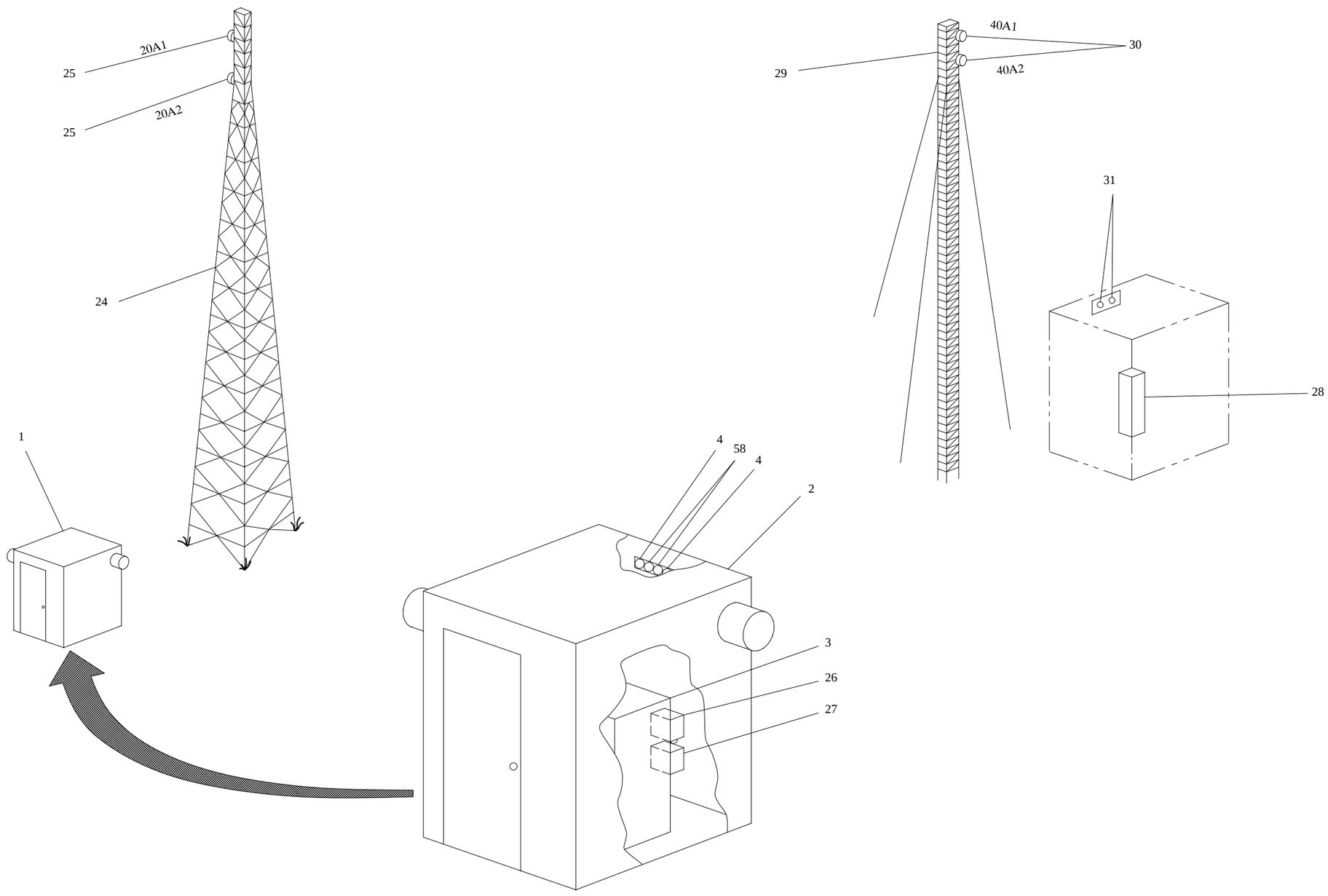

FIGURE 34. MLOS Group (Sheet 1 of 2)

CABLE ASSEMBLIES (NOT SHOWN)

INDEX NO.	REF DES	FROM	TO	USABLE ON CODE
34−5	19W1	P1(19J3)	P2(AC−POWER)	A
34−8	8W2	P1(39J2)	8A2TB1, A26LOAD	B
34−11	8W4	P1(19J2)	8A2TB1	A
34−14	*8W5	P1(19J1)	8A26 LOAD	A
34−14	*8W5	P1(19J1)	8A29 TB1	A
34−15	*8W6	P1(39J1)	8A26 LOAD	B
34−15	*8W6	P1(39J1)	8A29 TB1	B
34−18	8W7	P1(A29P1NTWK)	8A26 LOAD	B
34−22	W90	19J4	W42P1	A
34−23	W91	19J5	W43P1	A
34−32	*W42	W90P2	20A10J1	A
34−35	39W1	39J3	AC−POWER	B
34−36	*W43	W91P2	20A11J1	
34−37	*W48	W96P2	40A1J1	B
34−38	*W49	W97P2	40A2J1	B
34−39	W96	39J4	W48P1	B
34−40	W97	39J5	W49P1	B
34−41	*W250	P(39J2)2	P(22J20)1	B
34−45	*W250	P(39J2)2	P(22J20)1	B
34−49	*W251	P(39J1)2	P(22J19)1	B

* SITE DEPENDENT

FIGURE 34. MLOS Group (Sheet 2 of 2)

FIGURE AND INDEX NO.	REF DES		PART NUMBER	INDENT	DESCRIPTION	CAGE CODE	QTY PER ASSY	CODES SMR	CODES USABLE ON
34−		*	1217740−XXX	1	MLOS GROUP ASSEMBLY	56232	REF	XC	
34−1	8	*	1217047−XXX	2	MLOS EQUIPMENT SHELTER ASSEMBLY	56232	1	XC	
34−2	13		D−1389−1	3	SHELTER, MLOS EQUIPMENT (For breakdown see FIGURE 40 on Page 2 − 335)	0E2J5	1	XC	
34−3	19	*	1214904−XXX	3	MICROWAVE RADIO (For breakdown see FIGURE 42 on Page 2 − 343)	56232	1	AD	
34−4			B537A	3	SUPPORT, WAVEGUIDE BOOT (56232) (spec dwg 1217073−202)	29189	2	PCOZZ	A
34−5	19W1	**	1217776−303	3	CABLE ASSEMBLY	56232	1	PAOOO	A
34−6	19W1P1	**	D38999/26WD5SN	4	CONNECTOR	96906	1	PAOZZ	
34−7	19W1P2	**	WC596/13−3	4	CONNECTOR	81348	1	PAOZZ	
34−8	8W2	* **	1217777−302	3	CABLE ASSEMBLY	56232	1	PAOOO	B
34−9	8W2P1	**	D38999/26WC35PN	4	CONNECTOR	96906	1	PAOZZ	B
34−10		**	MS25036−145	4	TERMINAL LUG	96906	3	PAOZZ	B
34−11	8W4	**	1217779−301	3	CABLE ASSEMBLY	56232	1	PAOOO	A
34−12	8W4P1	**	D38999/26WC35PN	4	CONNECTOR	96906	1	PAOZZ	A
34−13		**	MS25036−144	4	TERMINAL LUG	96906	2	PAOZZ	A
34−14	8W5	* **	1219663−303	3	CABLE ASSEMBLY	56232	1	PAOOO	A
34−15	8W6	* **	1219663−304	3	CABLE ASSEMBLY	56232	1	PAOOO	B
34−16	8W6P1	**	D38999/26WA35PN	4	CONNECTOR	81349	1	PAOZZ	
34−17		**	MS25036−101	4	TERMINAL LUG	96906	5	PAOZZ	
34−18	8W7	**	1224060−305	3	CABLE ASSEMBLY	56232	1	PAOOO	B
34−19	8W7P1	**	DAU−15SF0	4	CONNECTOR, RECEP-TACLE, ELECTRICAL (56232) (spec dwg 1218767−202)	71468	1	PAOZZ	B
34−20		**	MS25036−101	4	TERMINAL LUG	96906	5	PAOZZ	B
34−21		**	C88611000	4	BACKSHELL, EMI/RFI (56232) (spec dwg 1218780−201)	38250	1	PAOZZ	B

NOTE * : SITE DEPENDENT
NOTE ** : NOT SHOWN

FIGURE AND INDEX NO.	REF DES		PART NUMBER	INDENT	DESCRIPTION	CAGE CODE	QTY PER ASSY	CODES SMR	CODES USABLE ON
34−22	W90	**	222009−203	3	CABLE ASSEMBLY (56232) (spec dwg 1217775−203)	84147	1	PAOOO	A
34−23	W91	**	222009−204	3	CABLE ASSEMBLY (56232) (spec dwg 1217775−204)	84147	1	PAOOO	A
34−24	20		MF−RDA−AA	2	TOWER, SELF−SUPPORTING, 50 METERS	29189	1	AO	A
34−25	20A1 20A2	*	1217781−201	2	ANTENNA, HIGH PERFORMANCE	56232	2	PAOZZ	A
34−26	8A26	*	1218807−XXX	3	LINE PROTECTOR ASSEMBLY	56232	1	PAODD	A B
34−27	8A29	*	1222301−201	3	CHANNEL SERVICE UNIT ASSEMBLY	56232	1	XA	A B
34−28	39	*	1214904−XXX	2	MICROWAVE RADIO (For breakdown see FIGURE 44 on Page 2 − 351)	56232	1	AD	B
34−29	40		MF−RPG−AA	2	TOWER, GUYED, 50 METERS	29189	1	AO	B
34−30	40A1	*	1217781−201	2	ANTENNA, HIGH PERFORMANCE	56232	2	PAOZZ	B
34−31			B537A	2	SUPPORT, WAVEGUIDE BOOT (56232) (spec dwg 1217073−202)	29189	2	PCOZZ	
34−32	W42	* **	1213591−336	2	CABLE ASSEMBLY	56232	1	PAOOO	A
34−33	W42P2	**	L45R	3	CONNECTOR, COAXIAL, 7/8 IN. DIA FLANGE (56232) (spec dwg 1214567−202)	84147	1	PAOZZ	
34−34	W42P1	**	L45N	3	CONNECTOR, N FEMALE (56232) (spec dwg 1217681−202)	84147	1	PAOZZ	
34−35	39W1	* **	1217776−304	2	CABLE ASSEMBLY	56232	1	PAOOO	B
34−36	W43	* **	1213591−344	2	CABLE ASSEMBLY	56232	1	PAOOO	A
34−37	W48	* **	1213591−357	2	CABLE ASSEMBLY	56232	1	PAOOO	B
34−38	W49	* **	1213591−367	2	CABLE ASSEMBLY	56232	1	PAOOO	B

NOTE * : SITE DEPENDENT
NOTE ** : NOT SHOWN

FIGURE AND INDEX NO.	REF DES		PART NUMBER	INDENT	DESCRIPTION	CAGE CODE	QTY PER ASSY	CODES SMR	CODES USABLE ON
34−39	W96	**	222009−201	2	CABLE ASSEMBLY (56232) (spec dwg 1217775−201)	84147	1	PAOOO	B
34−40	W97	**	222009−202	2	CABLE ASSEMBLY (56232) (spec dwg 1217775−202)	84147	1	PAOOO	B
34−41	W250	* **	1217038−301	2	CABLE ASSEMBLY	56232	1	PAOOO	B
34−42		**	M24308/4−2	3	CONNECTOR	81349	1	PAOZZ	B
34−43		**	D38999/26WC35PN	3	CONNECTOR	96906	1	PAOZZ	B
34−44		**	KDM001−15CA4JF	3	BACKSHELL, EMI/RFI, STRAIN RELIEF (31461) (ALT PN 901−307−11F) (56232) (spec dwg 1214498−211)	50619	1	PAOZZ	B
34−45	W250	* **	1223893−301	2	CABLE ASSEMBLY	56232	1	PAOOO	B
34−46	W250P1	**	DAU−15PF0	3	CONNECTOR, ELECTRICAL, PLUG (56232) (spec dwg 1218768−202)	71468	1	PAOZZ	B
34−47	W250P2	**	D38999/26WC35PN	3	CONNECTOR	96906	1	PAOZZ	B
34−48		**	17−1657−09	3	BACKSHELL, RFI/EMI (38250) (ALT PN C88000218) (56232) (spec dwg 1218764−201)	02660	1	PAOZZ	B
34−49	W251	* **	1223893−302	2	CABLE ASSEMBLY	56232	1	PAOOO	B
	W251	* **	1224065−301	2	CABLE ASSEMBLY	56232	1	PAOOO	
34−50	W251P1	**	DAU−15PF0	3	CONNECTOR, ELECTRICAL, PLUG (56232) (spec dwg 1218768−202)	71468	1	PAOZZ	B
34−51	W251P2	**	D38999/26WC35PN	3	CONNECTOR	96906	1	PAOZZ	B
34−52		**	17−1657−09	3	BACKSHELL, RFI/EMI (38250) (ALT PN C88000218) (56232) (spec dwg 1218764−201)	02660	1	PAOZZ	B
34−53	W251P1	**	M24308/4−2	3	CONNECTOR	81349	1	PAOZZ	B
34−54	W251P2	**	D38999/26WA35PN	3	CONNECTOR	81349	1	PAOZZ	B
34−55		**	1217823−302	2	GROUNDING CABLE	56232	1	PAOOO	B
34−56		**	1217823−305	2	GROUNDING CABLE	56232	1	PAOOO	B

NOTE * : SITE DEPENDENT
NOTE ** : NOT SHOWN

Section II. Maintenance Parts List

FIGURE AND INDEX NO.	REF DES	PART NUMBER	INDENT	DESCRIPTION	CAGE CODE	QTY PER ASSY	CODES SMR	CODES USABLE ON
34−57	**	1217823−306	2	GROUNDING CABLE	56232	1	PAOOO	B
34−58		204989−2	2	GROUND STRAP KIT, SELF CLINCHING (56232) (spec dwg 1214548−201)	84147	4	PAOZZ	
34−59	W253 **	1219700−302	2	CABLE ASSEMBLY	56232	1	PAOOO	B
34−60	W253P1 W253P2 **	DAU−15PF0	3	CONNECTOR, RECEPTACLE, ELECTRICAL (56232) (spec dwg 1218768−202)	71468	2	PAOZZ	
34−61	**	17−1657−15	3	BACKSHELL, D−SUB, RFI/EMI (38250) (ALT PN C88000207) (56232) (spec dwg 1218764−202)	02660	2	PAOZZ	

USABLE ON CODES

A − RDA MLOS GROUP ASSEMBLY

B − RPG MLOS GROUP ASSEMBLY

NOTE * : SITE DEPENDENT

NOTE ** : NOT SHOWN

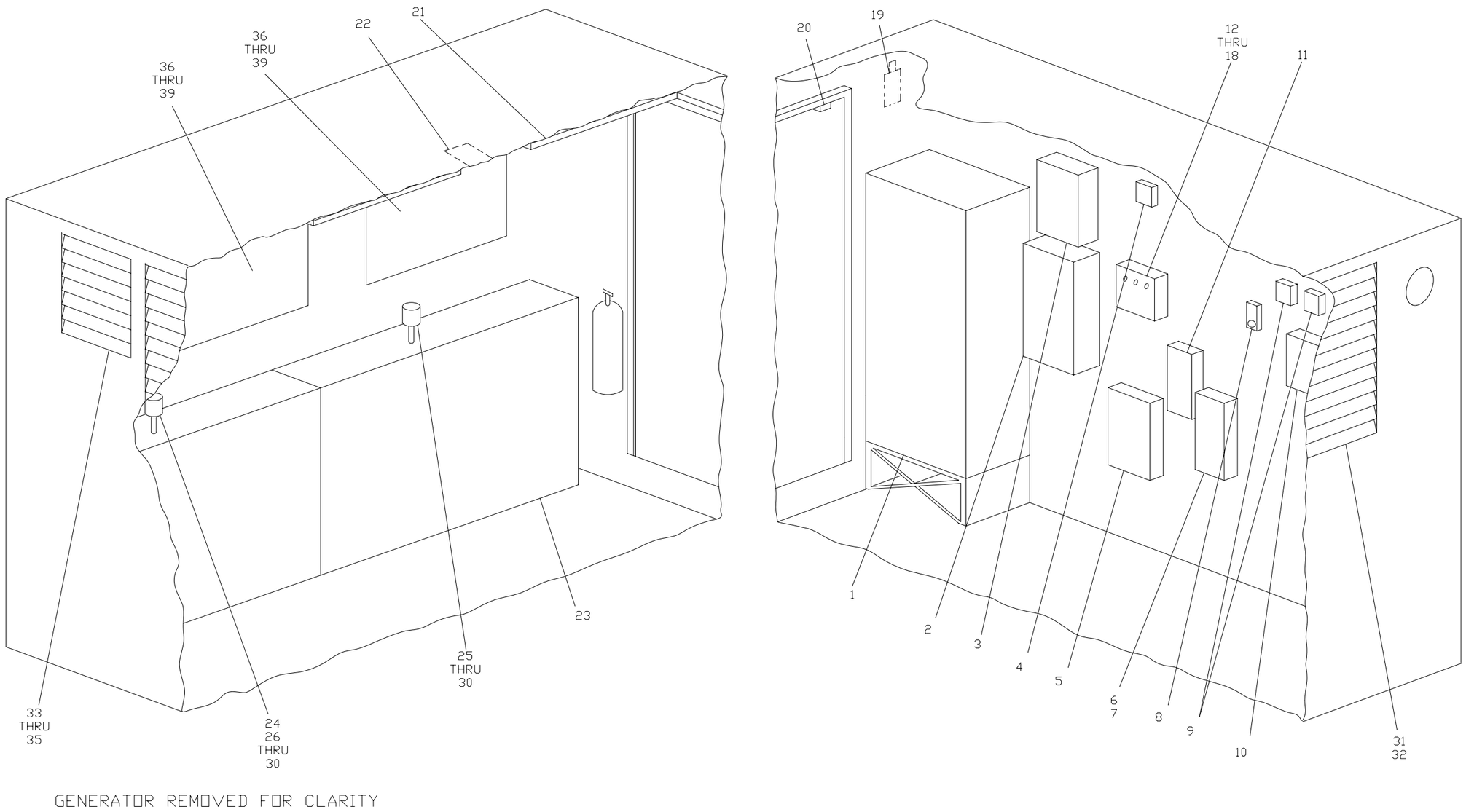

NX1174

FIGURE 35. RDA Site Generator Shelter, UD10

FIGURE AND INDEX NO.	REF DES	PART NUMBER	INDENT	DESCRIPTION	CAGE CODE	QTY PER ASSY	CODES SMR	CODES USABLE ON
35−	10 *	D−1388−1	1	SHELTER, GENERATOR, RDA (For NHA see FIGURE 1 on Page 2 − 1)	0E2J5	REF	XC	
	10 *	D−1388−3	1	SHELTER, GENERATOR, RDA (For NHA see FIGURE 1 on Page 2 − 1)	0E2J5	REF	XC	
	10 *	D−1719	1	SHELTER, GENERATOR, RDA (For NHA see FIGURE 1 on Page 2 − 1)	0E2J5	REF	XC	
35−1	10A1−1	OT3	2	AUTO TRANSFER SWITCH (ONAN) (For breakdown see FIGURE 36 on Page 2 − 312)	44940	1	PAFDD	A
	10A1	294306	2	AUTO TRANSFER SWITCH (KOHLER) (For breakdown see FIGURE 37 on Page 2 − 317)	67271	1	XC	B
35−2	10S1	Q2L3225	2	SWITCH, POWER DISCONNECT, UTILITY, 225 AMP	63637	1	PAOZZ	
35−3	10A2	CH12BB	2	POWER DISTRIBUTION PANEL	08372	1	PAOZZ	
35−4	10K1	5X847A	2	RELAY, HEATER LOCKOUT	56950	1	PAOZZ	
35−5	10HR1	2E441	2	HEATER	25795	1	PAOZZ	
35−6	10TPS1	D324N	2	FUSED DISCONNECT, 200 AMP (0E2J5) (ALT PN 24340)	56365	1	PAOZZ	
35−7	10TPS1F1 10TPS1F2 10TPS1F3	TR200R	3	FUSE, 200 AMP, TIME DELAY	71424	3	PAOZZ	
35−8	10S2	2E206	2	THERMOSTAT, TRANSMITTER (0E2J5) (ALT PN 10877)	25795	1	PAOZZ	
35−9	10A7	753−PB/XO (32 TO 122)	2	SENSOR, INTERIOR TEMPERATURE	33969	1	PAOZZ	
	10A12	753−PB/XO (32 TO 122)	2	SENSOR, INTERIOR TEMPERATURE	33969	1	PAOZZ	C
35−10	10A9	191380	2	ALARM PANEL	0E2J5	1	PAOZZ	
	10A9	191381	2	ALARM PANEL	0E2J5	1	PAOZZ	C
35−11	10A22	191382	2	AUXILIARY ALARM PANEL	0E2J5	1	PAOZZ	C
35−12	10A20	1455−85	2	SURGE PROTECTOR	23663	1	PAODD	
	NOTE * :	SITE DEPENDENT						

FIGURE AND INDEX NO.	REF DES	PART NUMBER	INDENT	DESCRIPTION	CAGE CODE	QTY PER ASSY	CODES SMR	CODES USABLE ON
35−13	10A20E1/E2 10A20E3/E4 10A20E5/E6	72233	2	MODULE, PROTECTOR	23663	6	PAOZZ	
35−14	10A20F1 * 10A20F2 * 10A20F3 *	FRN−R−60	3	FUSE, 250V, 60A (23663) (ALT PN 63569)	71400	3	PAOZZ	
35−15	10A20F1−1 * 10A20F2−1 * 10A20F3−1 *	FRN−R−40	3	FUSE, 250V, 40A (IF A SYSTEM HAS PN 77109 INSTALLED, REPLACE BOTH MODULES ON THAT PHASE WITH PN 72233)	71400	3	PAOZZ	
35−16	10A20DS1 * 10A20DS2 * 10A20DS3 *	72346−01	3	LED ASSEMBLY	23663	3	PAOZZ	
35−17	10A20DS1−1 * 10A20DS2−1 * 10A20DS3−1 *	NE51H	3	LAMP	81349	3	PAOZZ	
35−18	10A20E2	72317−01	3	PROTECTOR, N−G	23663	1	PAOZZ	
35−19	10DS1	3650	2	EXTERIOR LIGHT (0E2J5) (ALT PN 10278)	52770	1	PAOZZ	
35−20	10S3	39−2GY	2	SWITCH, DOOR ALARM, MAGNETIC (0E2J5) (ALT PN 13272)	33240	1	PAOZZ	
35−21	10DS2 10DS3	CA−2224−4	2	FLUORESCENT LIGHT FIXTURE	56950	2	XB	
35−22	10A8	502	2	THERMAL DETECTOR	07464	1	PAOZZ	
35−23	10A6	906406	2	FUEL TANK ASSEMBLY, DUAL	8L740	1	XB	
35−24	10A6A1	13614−1	3	FUEL SENSOR ASSEMBLY	0E2J5	1	PAODD	
35−25	10A6A2	13614−1	3	FUEL SENSOR ASSEMBLY	0E2J5	1	PAODD	C
35−26	10A6A1A1	700−1−24	4	PROBE, FUEL LEVEL SENSOR	2W222	1	PAOZZ	
	10A6A2A1	700−1−24	4	PROBE, FUEL LEVEL SENSOR	2W222	1	PAOZZ	C
35−27	10A6A1A2	408−2200	4	ELECTRONIC UNIT	2W222	1	PAOZZ	
	10A6A2A2	408−2200	4	ELECTRONIC UNIT	2W222	1	PAOZZ	C
35−28	10A6A1E1	377−0001−24	4	SPARK ARRESTER	2W222	1	PAOZZ	
	10A6A2E1	377−0001−24	4	SPARK ARRESTER	2W222	1	PAOZZ	C
35−29	10A6A1E2	377−4−14	4	SURGE SUPPRESSOR	2W222	1	PAOZZ	
	NOTE * :	SITE DEPENDENT						

FIGURE AND INDEX NO.	REF DES	PART NUMBER	INDENT	DESCRIPTION	CAGE CODE	QTY PER ASSY	CODES SMR	CODES USABLE ON
	10A6A2E2	377−4−14	4	SURGE SUPPRESSOR	2W222	1	PAOZZ	C
35−30	10A6A1MT4	207−0007−209	4	INSULATOR	2W222	1	PAOZZ	
	10A6A2MT4	207−0007−209	4	INSULATOR	2W222	1	PAOZZ	C
35−31	10A3	CD36−36”x36”	2	DAMPER ASSEMBLY, EXHAUST	34081	1	XB	
35−32	10A3B1	MA−418−0−0−2 OR MA−418−0−0−3	3	MOTOR, ACTUATOR (0E2J5) (ALT PN 11985)	65149	1	PAOZZ	
35−33	10A11	CD36−20”X20”	2	DAMPER ASSEMBLY, EXHAUST	34081	1	PAOZZ	
35−34	10A11B1	MA−418−0−0−2 OR MA−418−0−0−3	3	MOTOR, ACTUATOR (0E2J5) (ALT PN 11985)	65149	1	PAOZZ	
35−35	10A11B2	7C527	3	FAN, EXHAUST	25795	1	PAOZZ	
35−36	10A4 10A5	CD36−42”X42”	2	DAMPER ASSEMBLY, INTAKE	34081	2	XB	
35−37	10A4B1 10A5B1	MA−418−0−0−2 OR MA−418−0−0−3	3	MOTOR, ACTUATOR (0E2J5) (ALT PN 11985)	65149	2	PAOZZ	
35−38	10A4MP1 10A5MP1	21198A	3	FILTER, AIR 21”X42”X1” (FIBERGLASS WITH EXPANDED METAL)	0E2J5	4	PAOZZ	
35−39	10A4MP1−1 10A5MP1−1	21X41X1	3	FILTER MEDIA	57316	4	PAOZZ	

USABLE ON CODES

A − LPP SITES (ONAN ENGINE GENERATOR)

B − FSP SITES (KOHLER ENGINE GENERATOR)

C − REDUNDANT SITES

NOTE * : SITE DEPENDENT

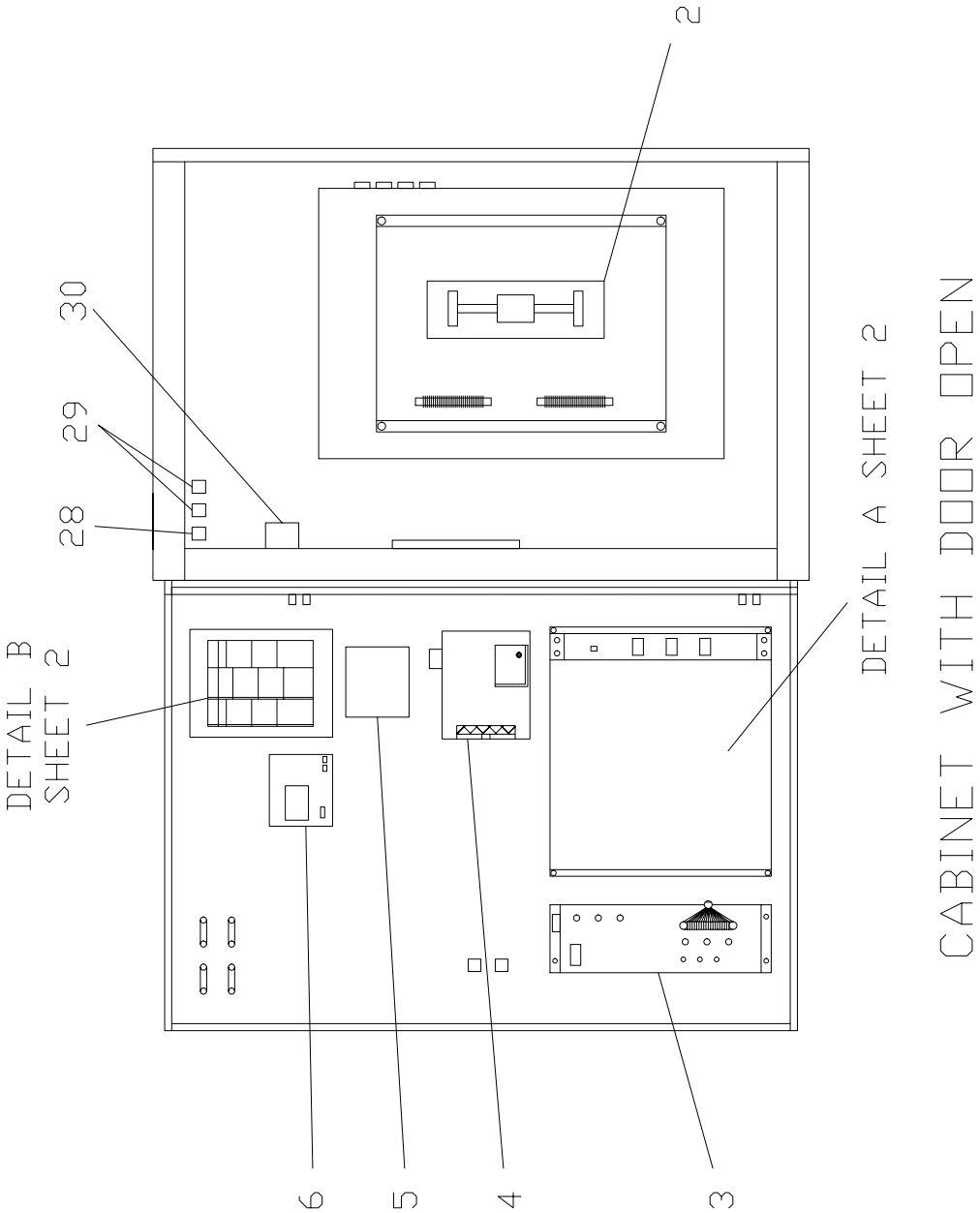

NX1782

FIGURE 36. ONAN Generator/Transfer Switch System (Sheet 1 of 3)

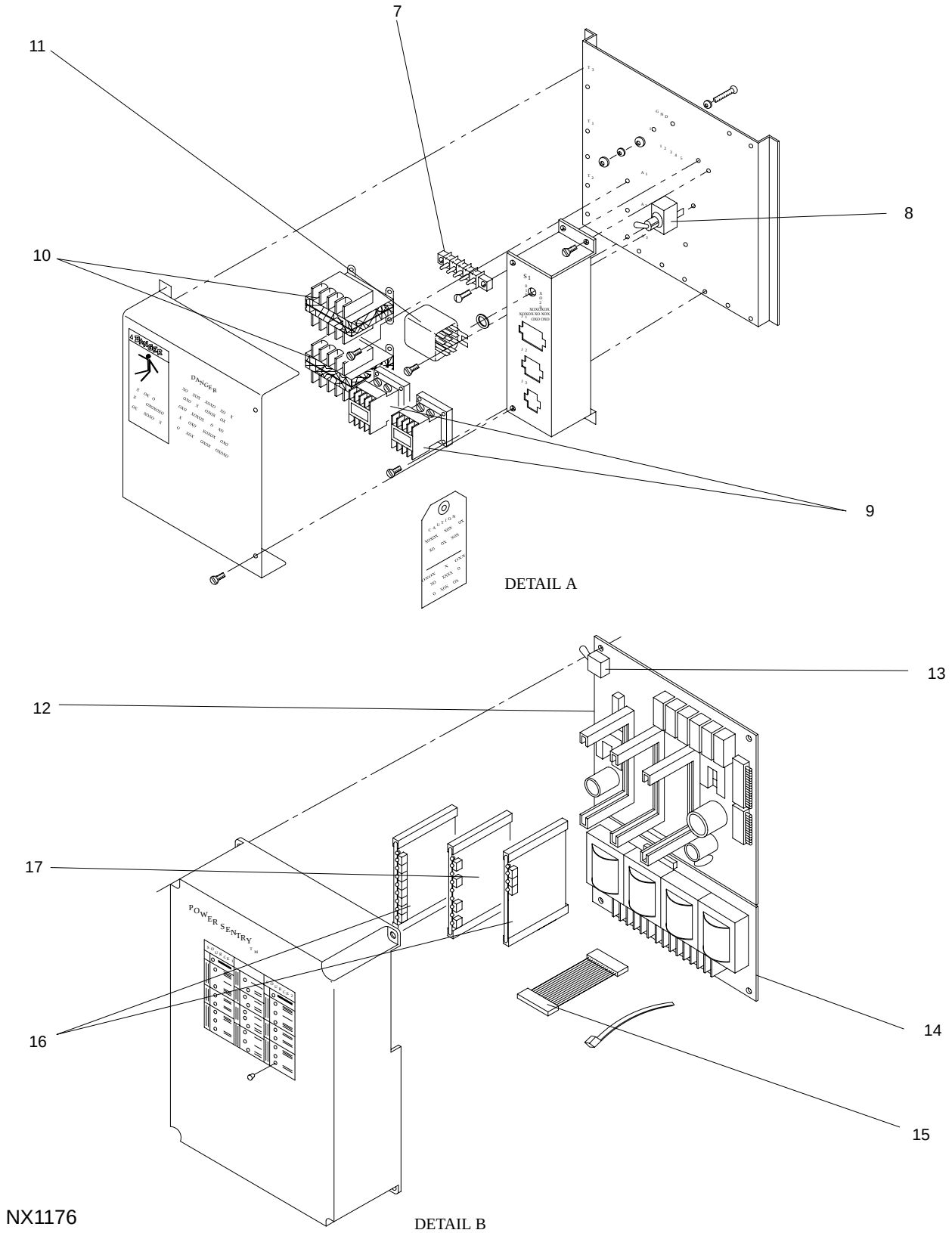

FIGURE 36. ONAN Generator/Transfer Switch System (Sheet 2 of 3)

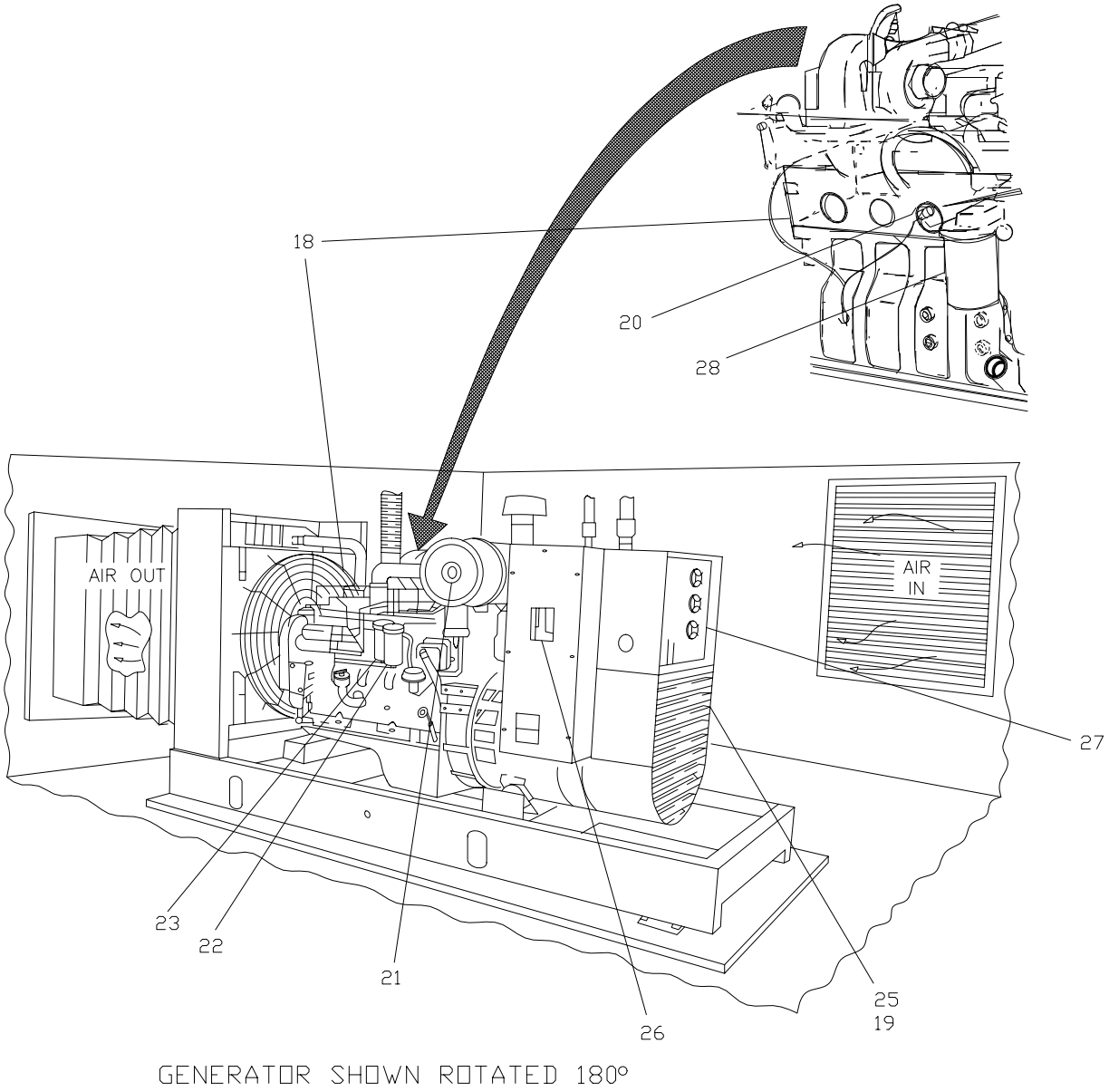

NX1175

FIGURE 36. ONAN Generator/Transfer Switch System (Sheet 3 of 3)

FIGURE AND INDEX NO.	REF DES	PART NUMBER	INDENT	DESCRIPTION	CAGE CODE	QTY PER ASSY	CODES SMR	CODES USABLE ON
36−			1	ONAN GENERATOR/TRANSFER SWITCH SYSTEM		REF		
36−1	10A1−1	OT3	2	AUTO TRANSFER SWITCH (For NHA see FIGURE 35 on Page 2 − 307)	44940	1	PAFDD	
36−2	10A1S1−1	306−3489−03	3	TRANSFER SWITCH	44940	1	PAOZZ	
36−3	10A1A6−1	300−3530	3	BATTERY CHARGER	44940	1	PAOZZ	
36−4	10A1A2−1	300−3096	3	PCB, SIGNAL MODULE	44940	1	PAOZZ	
36−5	10A1A8−1	300−3164	3	PROGRAM TRANSITION MODULE	44940	1	PAOZZ	
36−6	10A1A3−1	307−2577	3	EXERCISER CLOCK	44940	1	PAOZZ	
36−7	10A1A1TB1−1	332−2884	4	TERMINAL BLOCK	44940	1	PAOZZ	
36−8	10A1A1S1−1	308−0406	4	SWITCH, TOGGLE, DPDT	44940	1	PAOZZ	
36−9	10A1A1K2−1 10A1A1K3−1	307−2648	4	RELAY, 4PDT, 24VAC	44940	2	PAOZZ	
36−10	10A1A1T1−1 10A1A1T2−1	315−0655−02	4	TRANSFORMER, POWER ACCESSORY PANEL	44940	2	PAOZZ	
36−11	10A1A1K1−1	307−2575	4	RELAY, 3PDT, 24VAC	44940	1	PAOZZ	
36−12	10A1A4−1	300−4069	4	MOTHERBOARD, POWER SENTRY	44940	1	PAOZZ	
36−13	10A1A4S1−1	308−0841	5	SWITCH, TOGGLE	44940	1	PAOZZ	
36−14	10A1A9−1	300−3092	4	PCB, TRANSFORMER	44940	1	PAOZZ	
36−15	10A1W1−1	323−1387	4	CABLE ASSEMBLY	44940	1	PAOZZ	
36−16	10A1A4A1−1 10A1A4A3−1	300−3093−01	4	VOLTAGE SENSING MODULE (44940) (ALT PN 300−3093−11)	44940	2	PAOZZ	
36−17	10A1A4A2−1	300−3094	4	PCB, TIME DELAY	44940	1	PAOZZ	
36−18	10M1−1	6BT5.9	2	ENGINE, DIESEL	15434	1	XB	
36−19	10M1BT1−1 10M1BT2−1	416−0796	3	BATTERY, LEAD ACID	44940	2	PCOZZ	
36−20	10M1MP4−1	3903264	3	FILTER, OIL (U1138) (ALT PN LF−3349)	35284	1	PAOZZ	
36−21	10M1MP1−1	140−2148	3	FILTER, AIR	44940	1	PAOZZ	
36−22	10M1MP2−1	FS−1280	3	FILTER, FUEL, WATER, SEPARATOR	33457	1	PAOZZ	
36−23	10M1MP5−1	FF5052	3	FILTER, FUEL	33457	1	PAOZZ	
36−24	10M1MP3−1 *	333−0532−01	3	PLUG, HEAT EXCHANGER	44940	1	PAOZZ	
36−25	10G1−1	MODEL 80DGDA	2	GENERATOR	44940	1	XB	
	NOTE * :	NOT SHOWN						

FIGURE AND INDEX NO.	REF DES	PART NUMBER	INDENT	DESCRIPTION	CAGE CODE	QTY PER ASSY	CODES	
							SMR	USABLE ON
36−26	10G1S1−1	320−1512−10	3	SWITCH, POWER, DISCONNECT, 225 AMP	44940	1	PAOZZ	
36−27	10G1K1−1	307−1056	3	RELAY	44940	1	PAOZZ	
36−28	10A1TD1	CDB−38−70003	3	RELAY, TIME DELAY	77342	1	PAOZZ	
36−29	10A1K2−1 10A1K3−1	5X827	3	RELAY	25795	2	PAOZZ	
36−30	10A1K7	269958	3	RELAY	67271	1	PAOZZ	
	NOTE * :	NOT SHOWN						

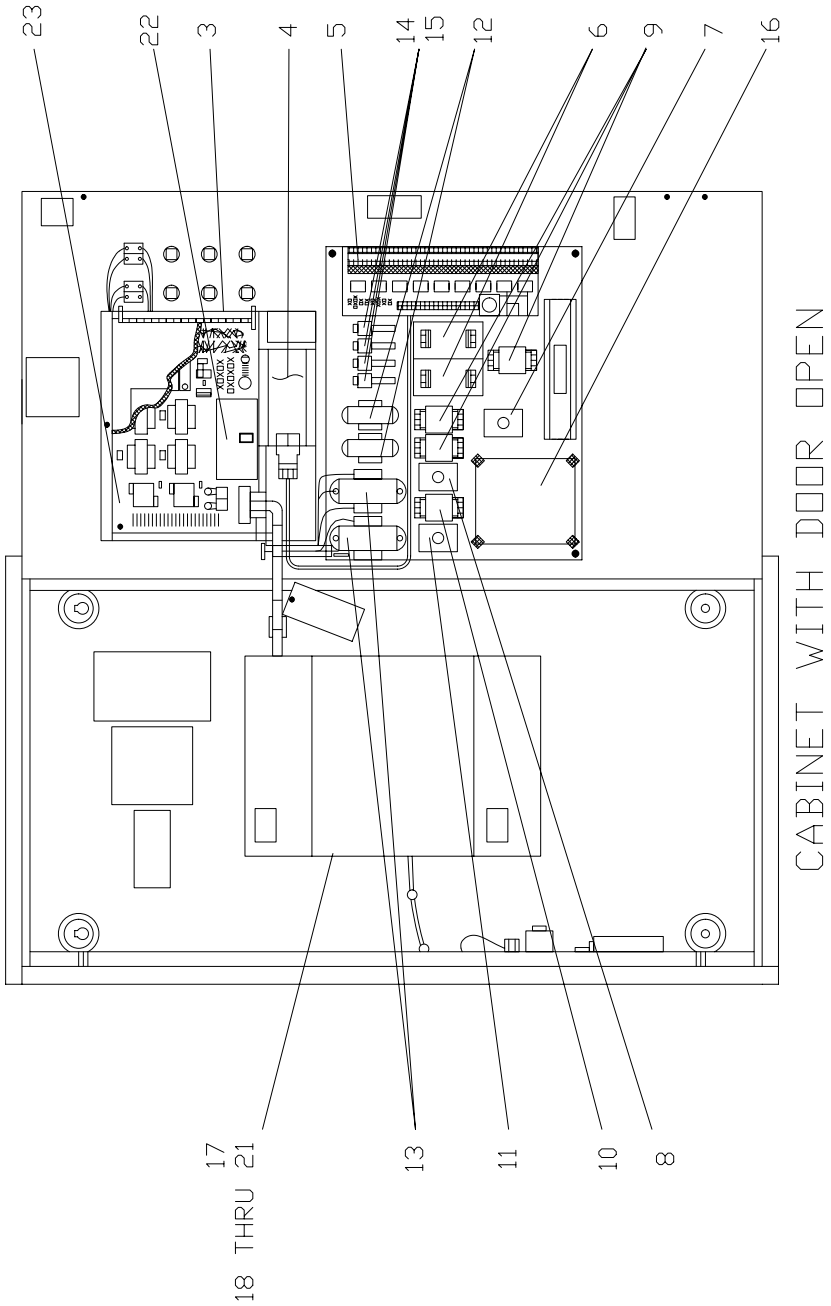

NX1783

FIGURE 37. KOHLER Generator/Transfer Switch System (Sheet 1 of 5)

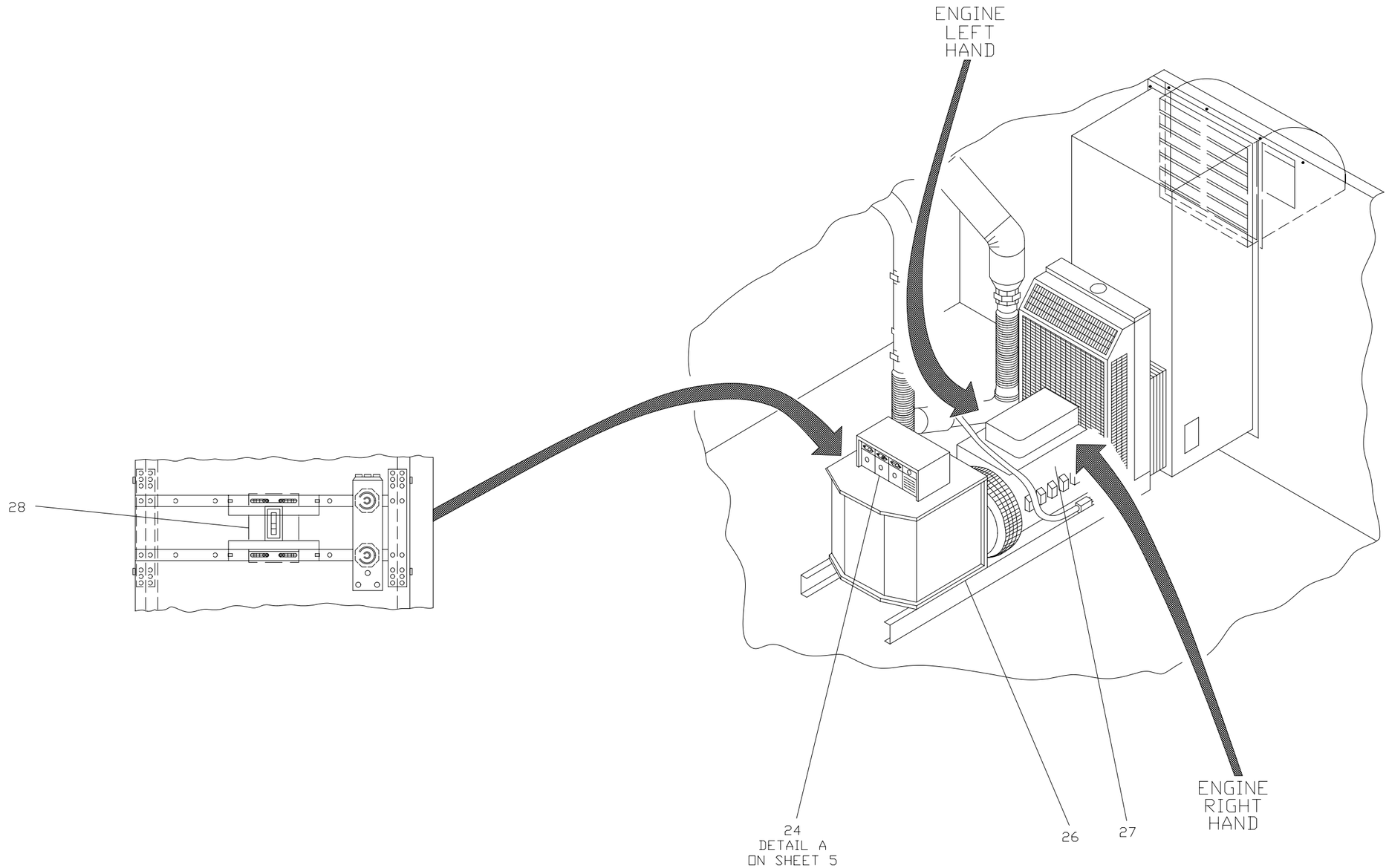

NX1178

FIGURE 37. KOHLER Generator/Transfer Switch System (Sheet 2 of 5)

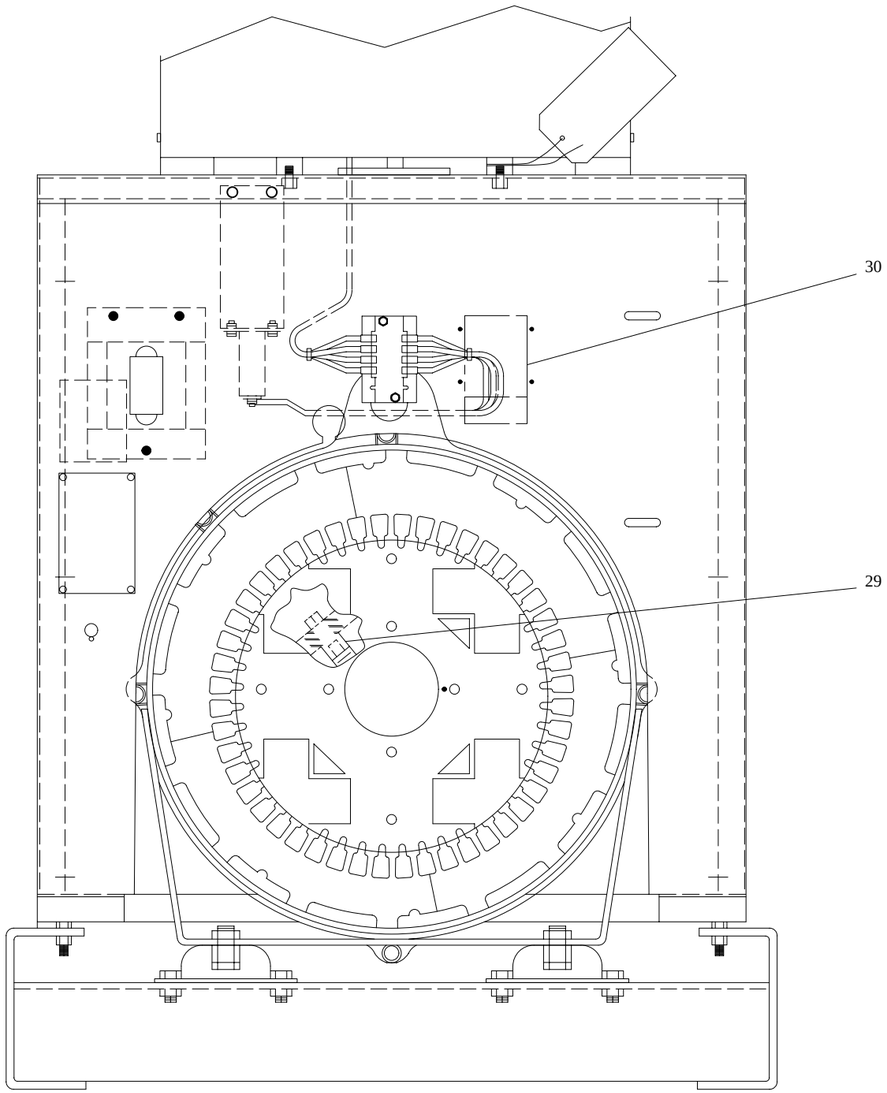

SECTION A−A

NX1179

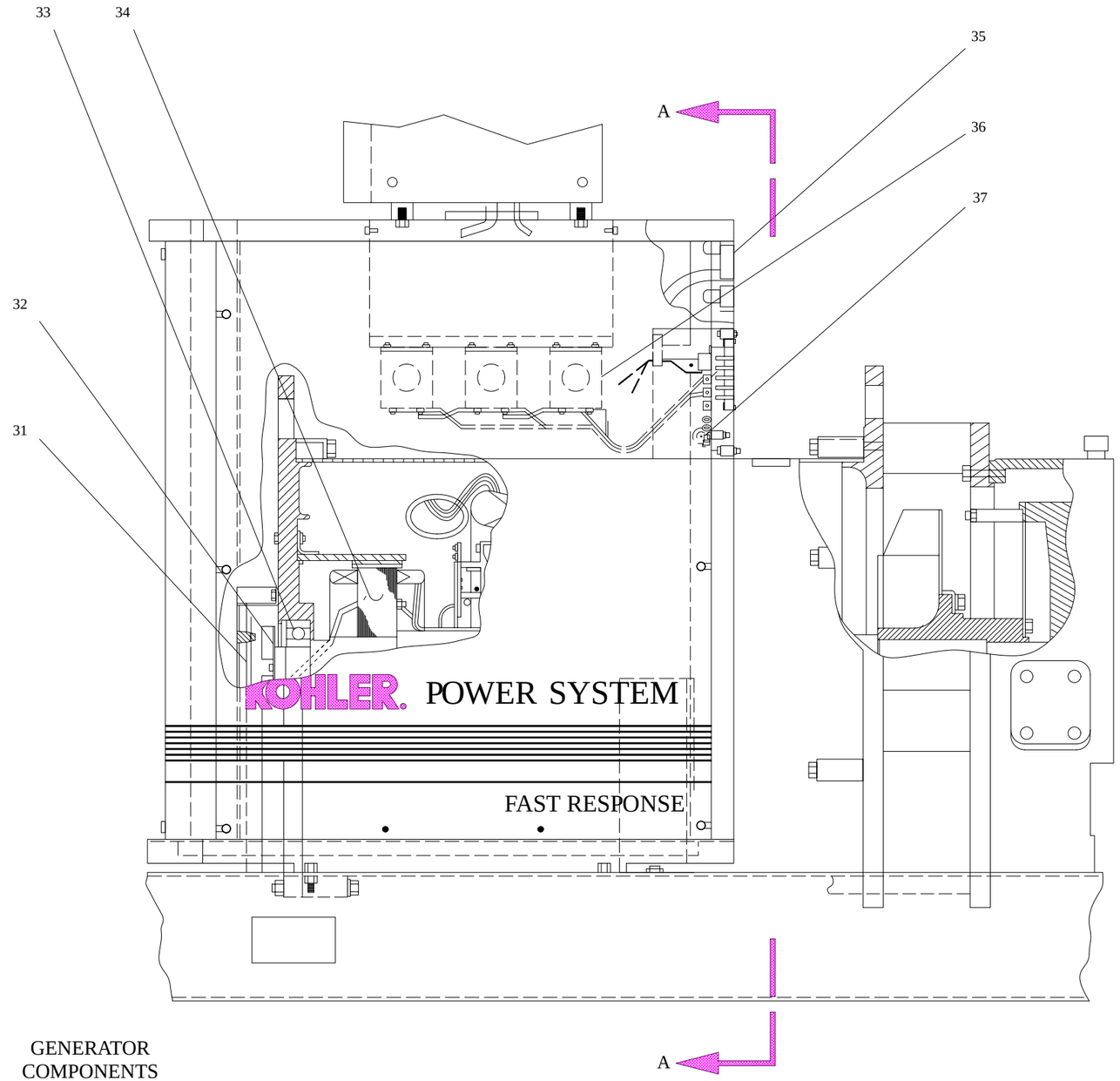

GENERATOR
COMPONENTS

FIGURE 37. KOHLER Generator/Transfer Switch System (Sheet 3 of 5)

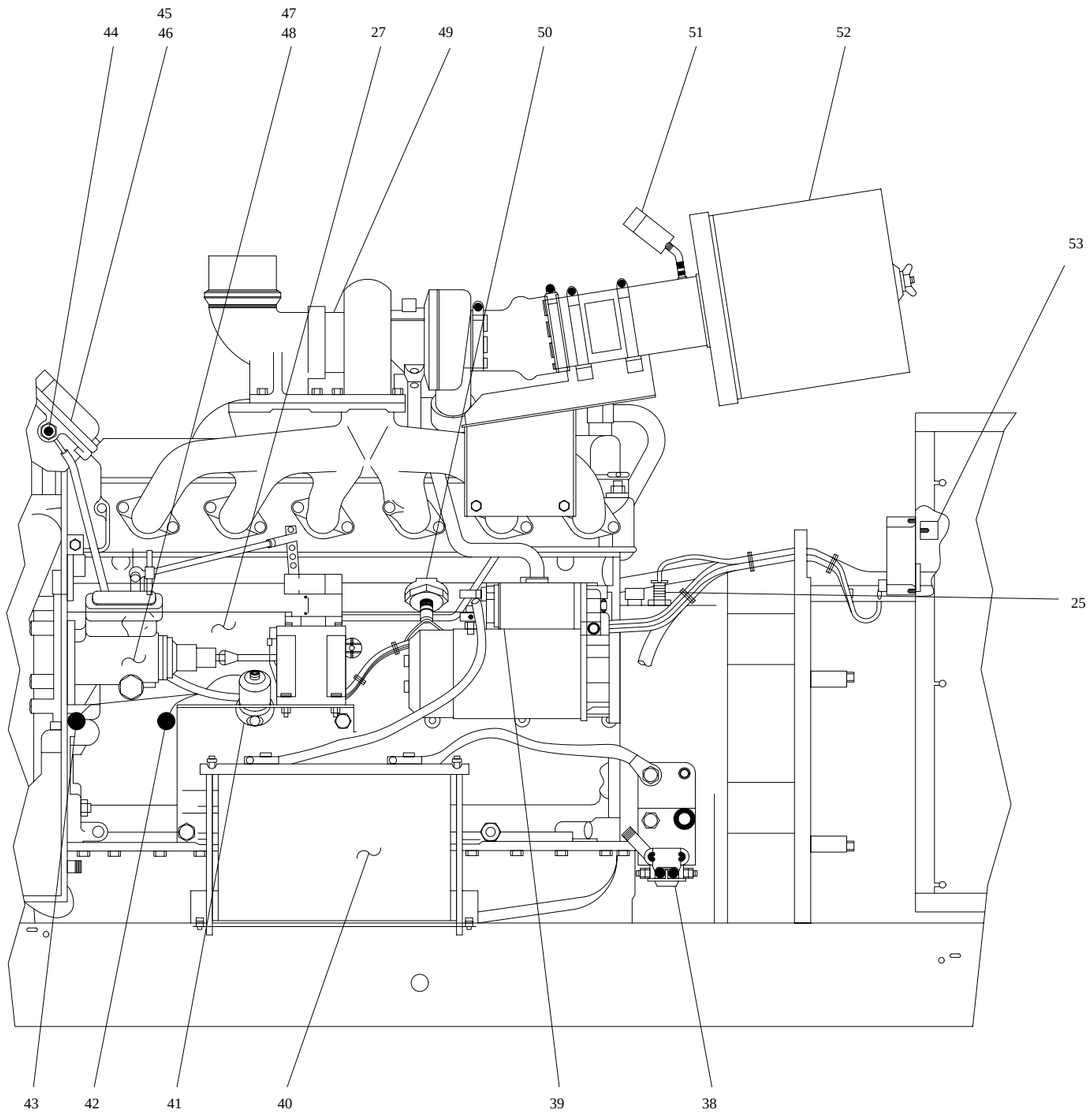

ENGINE−LEFT HAND

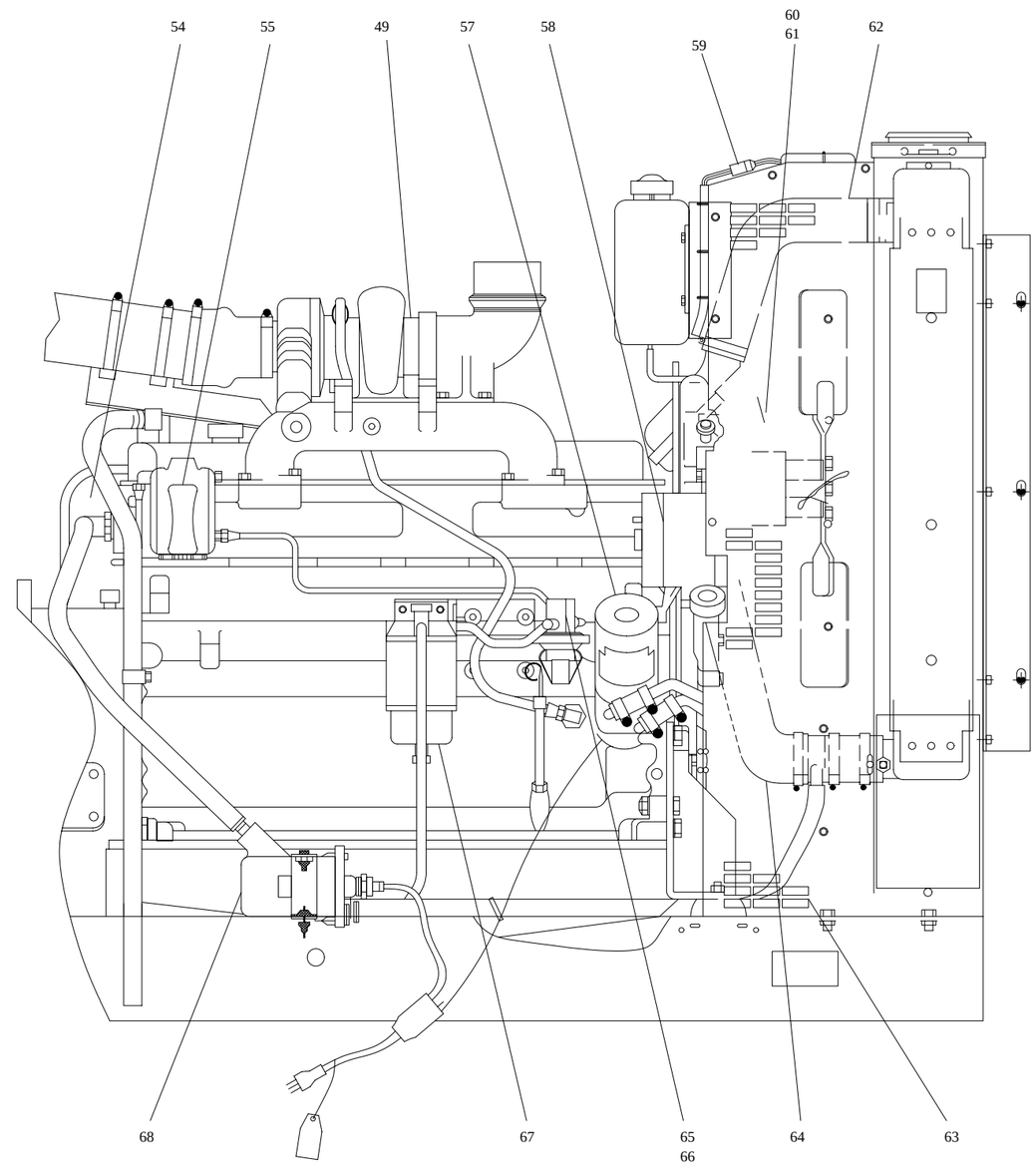

ENGINE−RIGHT HAND

NX1180

ENGINE COMPONENTS

FIGURE 37. KOHLER Generator/Transfer Switch System (Sheet 4 of 5)

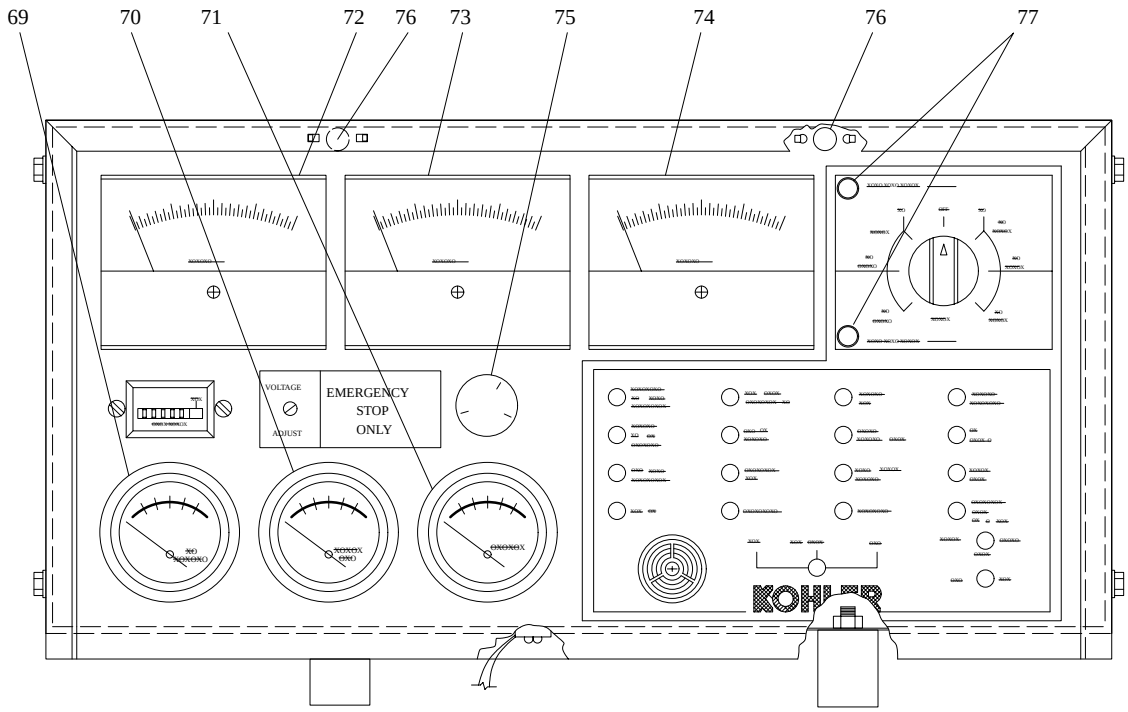

DETAIL A − FRONT VIEW

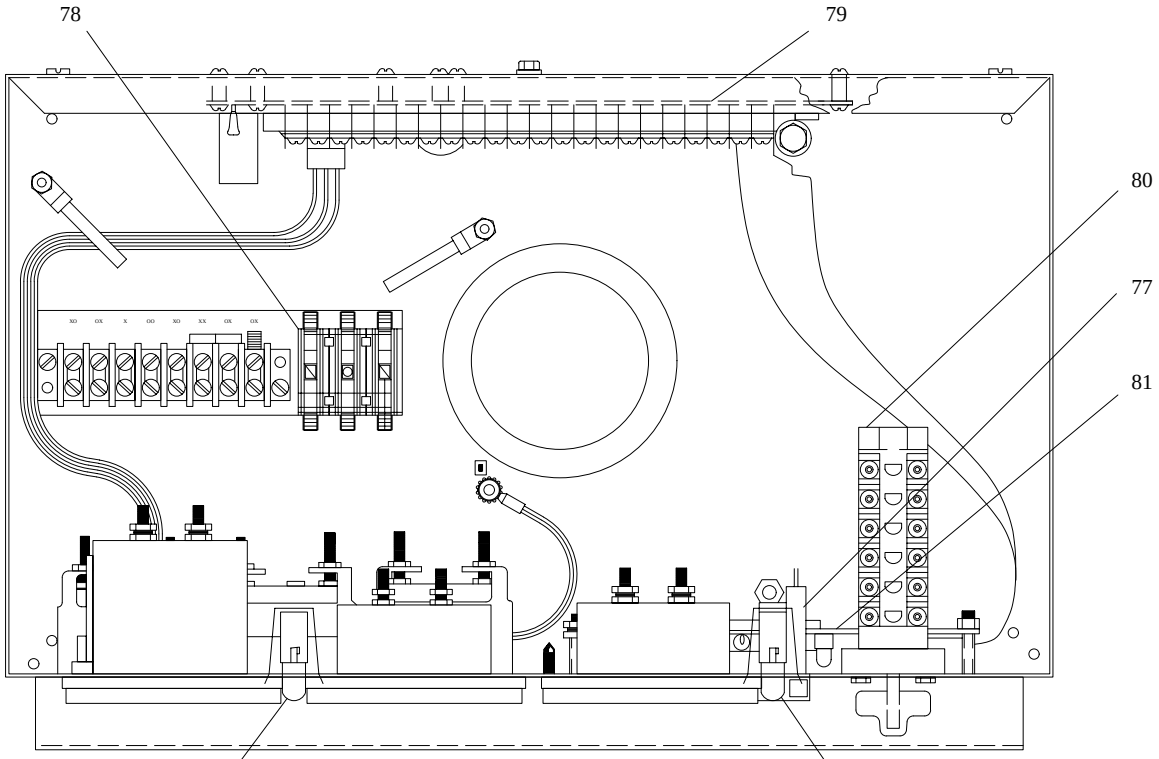

NX1181

DETAIL A − TOP VIEW

FIGURE 37. KOHLER Generator/Transfer Switch System (Sheet 5 of 5)

FIGURE AND INDEX NO.	REF DES	PART NUMBER	INDENT	DESCRIPTION	CAGE CODE	QTY PER ASSY	CODES SMR	CODES USABLE ON
37−			1	KOHLER GENERATOR/TRANSFER SWITCH SYSTEM		REF		
37−1	10A1	294306	2	AUTO TRANSFER SWITCH (For NHA see FIGURE 35 on Page 2 − 307)	67271	1	XC	
37−2	**	346016	3	OPTION KIT	67271	1	XC	
37−3	10A1A1	B−294548 OR 346060	3	MICROCONTROLLER ASSEMBLY	67271	1	PAOZZ	
37−4	10A1A7	294563	3	PCB, LOAD SHED	67271	1	PAOZZ	
37−5	10A1A8	D−294303	3	PCB, 10 RELAY	67271	1	PAOZZ	
37−6	10A1A4 10A1A5	C−294301	3	PCB, DRY CONTACT KIT	67271	2	PAOZZ	
37−7	10A1TD1	CDB−38−70003	3	RELAY, TIME DELAY	77342	1	PAOZZ	
37−8	10A1K4	CKB−38−37060	3	RELAY, TIME DELAY (77342) (ALT PN 3−1393137−2)	0K5V0	1	PAOZZ	
37−9	10A1K5 10A1K6 10A1K7	269958	3	RELAY	67271	3	PAOZZ	
37−10	10A1K3	320475	3	RELAY	75271	1	PAOZZ	
37−11	10A1K2	320473	3	RELAY, VOLTAGE SENSING	67271	1	PAOZZ	
37−12	10A1T3 10A1T4	295281	3	TRANSFORMER	67271	2	PAOZZ	
37−13	10A1T1 10A1T2	294594	3	TRANSFORMER	67271	2	PAOZZ	
37−14	10A1F1 10A1F2 10A1F3 10A1F4	239179	3	FUSE	67271	4	PAOZZ	
37−15	10A1XF1 10A1XF2 10A1XF3 10A1XF4	239050	3	HOLDER, FUSE	67271	4	PAOZZ	
37−16	10A1A6	A−294228	3	CHARGER, BATTERY	67271	1	PAOZZ	
37−17	10A1A2	A−320491	3	CONTACTOR ASSEMBLY	67271	1	PAOLD	
37−18	10A1A2CR1	294544	4	RECTIFIER	67271	1	PAOLD	
37−19	10A1A2L1	295503	4	KIT, COIL	67271	1	PAOZZ	
37−20	10A1A2MP1	295597	4	KIT, SPRING	67271	1	PAOZZ	
37−21	10A1A2MP3	296062	4	CONTACTS, COIL CLEARING	67271	1	PAOZZ	
	NOTE * : SITE DEPENDENT NOTE ** : NOT SHOWN							

FIGURE AND INDEX NO.	REF DES	PART NUMBER	INDENT	DESCRIPTION	CAGE CODE	QTY PER ASSY	CODES SMR	CODES USABLE ON
37−22	10A1A3	PA−320217	3	3 PHASE SENSING MODULE	67271	1	PAOZZ	
37−23	10A1A1PS1	E−294491	3	POWER SUPPLY	67271	1	PAOZZ	
37−24	10G1A1	A−276950	3	CONTROLLER ASSEMBLY	67271	1	PAODD	
37−25	10M1PU1	255750	3	PICKUP, MAGNETIC	67271	1	PAOZZ	
37−26	10G1	80ROZJ81	2	GENERATOR, 80KW	67271	1	XC	
37−27	10M1	T06059T	2	ENGINE ASSEMBLY / JOHN DEERE COMPANY	75755	1	XB	
37−28	10G1CB2	X−786−70	3	CIRCUIT BREAKER	67271	1	PAOZZ	
37−29	10G1MT1 10G1MT2 10G1MT3	241623	3	SENSOR, FERROMAGNETIC	52845	3	PAOZZ	
37−30	10G1CB1	X−796−6	3	CIRCUIT BREAKER	67271	1	PAOZZ	
37−31	10G1A3	A−257099	3	PCB, LED CIRCUIT	67271	1	PAOZZ	
37−32	10G1A4	B−292902	3	PCB, SPLIT ACTIVATOR	67271	1	PAOZZ	
37−33	10G1MP2	X−758−6	3	BALL BEARING	67271	1	PAOZZ	
37−34	10G1MP1	257081	3	EXCITER ASSEMBLY, FIELD	52845	1	PAOZZ	
37−35	10G1K1	A−276963	3	CONTACT ASSEMBLY	67271	1	PAOZZ	
37−36	10G1T1 10G1T2 10G1T3	255860	3	TRANSFORMER, CURRENT	67271	3	PAOZZ	
37−37	10G1A5	C−255670	3	PCB, VOLTAGE REGULATOR	67271	1	PAOZZ	
37−38	10M1L1	223927	3	SOLENOID, STARTER (75160) (ALT PN RE13732)	67271	1	PAOZZ	
37−39	10M1S2	RE43266	3	SWITCH, STARTER	75160	1	PAOZZ	
37−40	10M1BT1	291918	3	BATTERY, ACID (75755) (ALT PN TY21767)	67271	1	PCOZZ	
37−41	10M1MP13	264390	3	SENDER, OIL PRESSURE	67271	1	PAOZZ	
37−42	10M1S6	240978	3	SWITCH, OIL PRESSURE	67271	1	PAOZZ	
37−43	10M1S4	271662	3	SWITCH, PRESSURE	67271	1	PAOZZ	
37−44	10M1S5	273759	3	SWITCH, HIGH WATER TEMPERATURE	67271	1	PAOZZ	
37−45	10M1S7	223676	3	THERMOSTAT (75160) (ALT PN AR48675)	67271	1	PAOZZ	
37−46	10M1MP8	224012	3	GASKET, THERMOSTAT (75160) (ALT PN R501373)	67271	1	PAOZZ	
37−47	10M1MP6	224255	3	PUMP, FUEL INJECTION (75755) (ALT PN RE48159)	67271	1	PAODD	
	NOTE * : SITE DEPENDENT NOTE ** : NOT SHOWN							

FIGURE AND INDEX NO.	REF DES	PART NUMBER	INDENT	DESCRIPTION	CAGE CODE	QTY PER ASSY	CODES SMR	CODES USABLE ON
37−48	10M1MP7	224171	3	NOZZLE, INJECTION (75755) (ALT PN RE38087)	67271	6	PAOZZ	
37−49	10M1MP20	2500021−301	3	EXHAUST ADAPTER (MODIFIED)	0WY55	1	PAOZZ	
37−50	10M1S3	290090	3	SWITCH, TEMPERATURE	67271	1	PAOZZ	
37−51	10M1M1	273113	3	GAUGE, RESTRICTION	67271	1	PAOZZ	
37−52	10M1MP18	253108	3	ELEMENT, AIR FILTER	67271	1	PAOZZ	
37−53	10G1K2	259391	3	RELAY	52845	1	PAOZZ	
37−54	10M1MP14	268298	3	SENDER, WATER TEMPERATURE	52845	1	PAOZZ	
37−55	10M1MP9 *	AR50041	3	FILTER, FUEL, RECTANGULAR	75755	1	PAOZZ	
37−56	10M1MP10 * **	RE62418	3	FILTER, FUEL, ROUND (75160) (ALT PN RE50455)	75755	1	PAOZZ	
37−57	10M1MP19	T19044	3	FILTER, OIL (67271) (ALT PN 223604)	75755	1	PAOZZ	
37−58	10M1MP16	224244	3	ALTERNATOR (75755) (ALT PN RE31694)	67271	1	PAOZZ	
37−59	10M1S1	273404	3	SWITCH, COOLANT LEVEL	67271	1	PAOZZ	
37−60	10M1MP4	224002	3	WATER PUMP (75755) (ALT PN AR97717)	67271	1	PAOZZ	
37−61	10M1MP5	223628	3	GASKET, WATERPUMP (75755) (ALT PN T20243)	67271	1	PAOZZ	
37−62	10M1MP11	273462	3	HOSE, RADIATOR, UPPER (75160) (ALT PN R81912)	67271	1	PAOZZ	
37−63	10M1MP15	224256	3	BELT SET (75160) (ALT PN RE44538)	67271	1	PAOZZ	
37−64	10M1MP12	273463	3	HOSE, RADIATOR, LOWER (75160) (ALT PN R61433)	67271	1	PAOZZ	
37−65	10M1MP2	223585	3	FUEL PUMP (75160) (ALT PN RE27667)	67271	1	PAOZZ	
37−66	10M1MP3	223557	3	GASKET, FUEL PUMP (75160) (ALT PN R97350)	67271	1	PAOZZ	
37−67	10M1MP17	224236	3	FILTER, WATER SEPARATOR	67271	1	PAOZZ	
37−68	10M1MP1	276691	3	HEATER, BLOCK (Original block heater no longer available. Contact local Kohler representative for repair/replacement)	67271	1	PAOZZ	
37−69	10G1A1M5	282897	4	GAUGE, OIL PRESSURE	52845	1	PAOZZ	
	NOTE * : SITE DEPENDENT NOTE ** : NOT SHOWN							

FIGURE AND INDEX NO.	REF DES	PART NUMBER	INDENT	DESCRIPTION	CAGE CODE	QTY PER ASSY	CODES	
							SMR	USABLE ON
37−70	10G1A1M4	282898	4	GAUGE, WATER TEMPERATURE	52845	1	PAOZZ	
37−71	10G1A1M3	253329	4	VOLTMETER, DC	67271	1	PAOZZ	
37−72	10G1A1M6	226531	4	METER, FREQUENCY	67271	1	PAOZZ	
37−73	10G1A1M1	282816	4	VOLTMETER, AC	67271	1	PAOZZ	
37−74	10G1A1M2	282804	4	AMMETER, AC	67271	1	PAOZZ	
37−75	10G1A1S2	292364	4	SWITCH, PUSHBUTTON	67271	1	PAOZZ	
37−76	10G1A1DS2 10G1A1DS4	255126	4	LAMP	52845	2	PAOZZ	
37−77	10G1A1DS1 10G1A1DS3	291740	4	LAMP, NEON, 120V	52845	2	PAOZZ	
37−78	10G1A1F1 10G1A1F2 10G1A1F3	291207	4	FUSE	67271	3	PAOZZ	
37−79	10G1A1A1	G−292806	4	PCB, MAIN CIRCUIT	67271	1	PAOZZ	
37−80	10G1A1S1	292373	4	SWITCH, SELECTOR	67271	1	PAOZZ	
37−81	10G1A1A2	B−292357	4	PCB, 16 LITE	67271	1	PAOZZ	
	NOTE * : SITE DEPENDENT NOTE ** : NOT SHOWN							

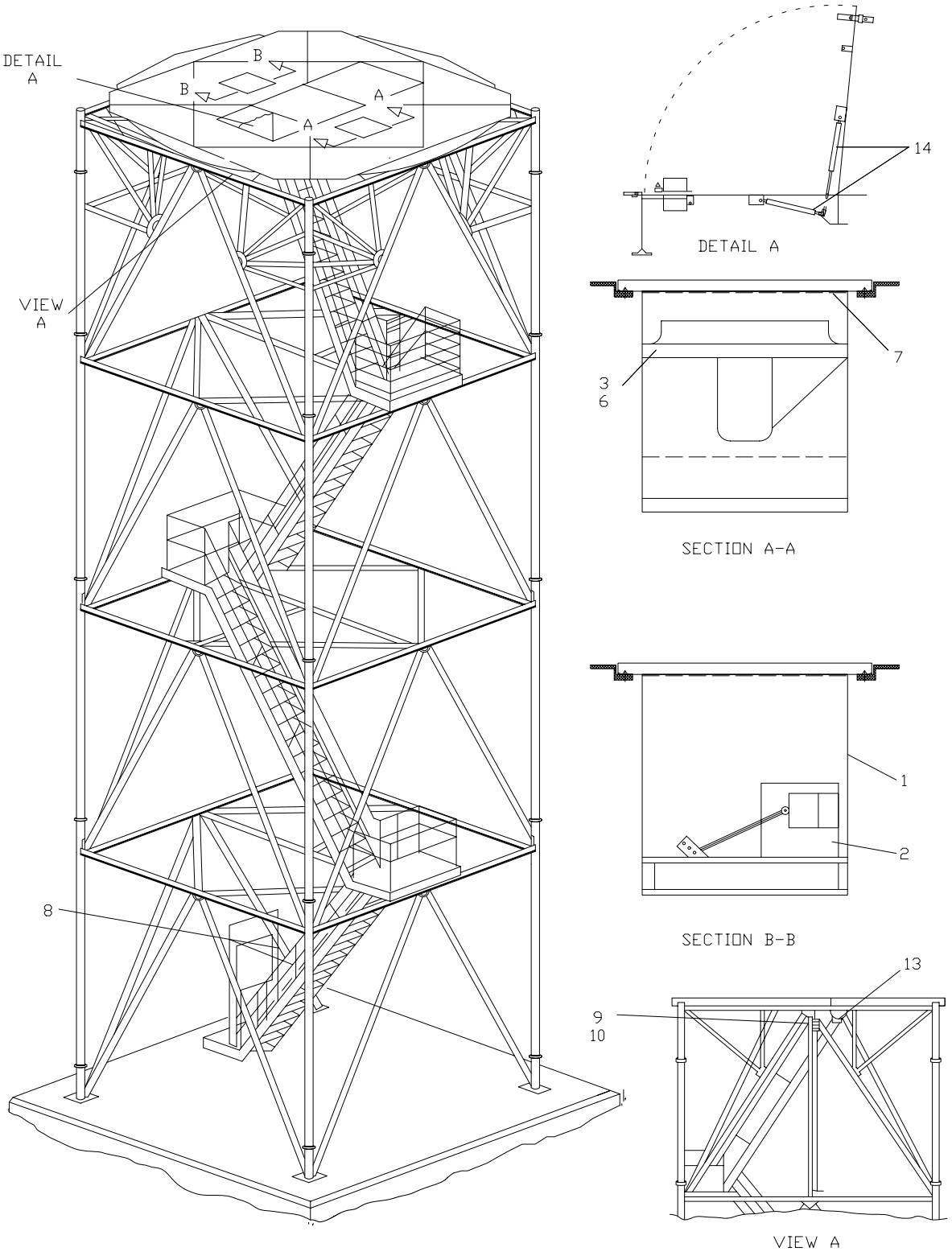

NX1182

FIGURE 38. Steel Tower, UD11

Section II. Maintenance Parts List

FIGURE AND INDEX NO.	REF DES	PART NUMBER	INDENT	DESCRIPTION	CAGE CODE	QTY PER ASSY	CODES SMR	CODES USABLE ON
38−	11 *	MICROFLECT	1	STEEL TOWER (For NHA see FIGURE 1 on Page 2 − 1)	29189	REF	PDFDD	
38−1	11A1	51257	2	MOTORIZED DAMPER ASSEMBLY, EXHAUST (29189) (source ctrl dwg D−80525B)	34081	1	XB	
38−2	11A1A1	59−SCD−B78558	3	DAMPER WITH ACTUATOR, BACKDRAFT,	29189	1	PAFZZ	
38−3	11A2 *	035−018	2	FAN ASSEMBLY, VENTILATION	99090	1	PAOZZ	A
	11A2 *	035D−RSP	2	FAN ASSEMBLY, VENTILATION	99090	1	PAOZZ	B
38−4	11A2A1 * **	GPNS−12	2	SURFACE MOUNT SOUND CUR.	99090	1	PAOZZ	
38−5	11A2−1 * **	CUBE−300−7	2	FAN ASSEMBLY, VENTILATION	51704	1	PAODD	
38−6	11A2B1	00005−01	3	MOTOR, RADOME, FAN (05472) (ALT PN L3510)	99090	1	PAOZZ	
38−7	11A3	59−SCD−B78559	2	DAMPER ASSEMBLY, INTAKE	29189	1	PAOZZ	
38−8	11S1	1094A	2	SWITCH, GATE SECURITY	63909	1	PAOZZ	
38−9	11A4 *	V2050G−A	2	LIGHT FIXTURE	57797	AR	PAOZZ	
38−10	11A4MP1	VGL2CL	3	GLOBE, CLEAR	03743	1	PAOZZ	
38−11	11A4−1 **	V2075G−A	2	LIGHT FIXTURE	57797	AR	PAOZZ	
38−12	11A4MP2 **	VGU−2	3	GUARD, LAMP	03743	AR	PAOZZ	
38−13	11S2	9007C62ED OR 9007C54ED	2	SWITCH, HATCH	51917	1	PAOZZ	
38−14	11MP4	C16−03472	2	STRUT, GAS (29189) (source control dwg B−78556)	5V313	2	PAOZZ	
38−15	11MP21 **	P67−0000SD	2	BALL, STUD 13MM	5V313	1	PAOZZ	
38−16	11MP22 **	P68−00019A	2	SAFETY CLIP	5V313	1	PAOZZ	

USABLE ON CODES

A − SITES WITH WHITE RADOME

B − SITES WITH COLORED RADOME

NOTE * : SITE DEPENDENT

NOTE ** : NOT SHOWN

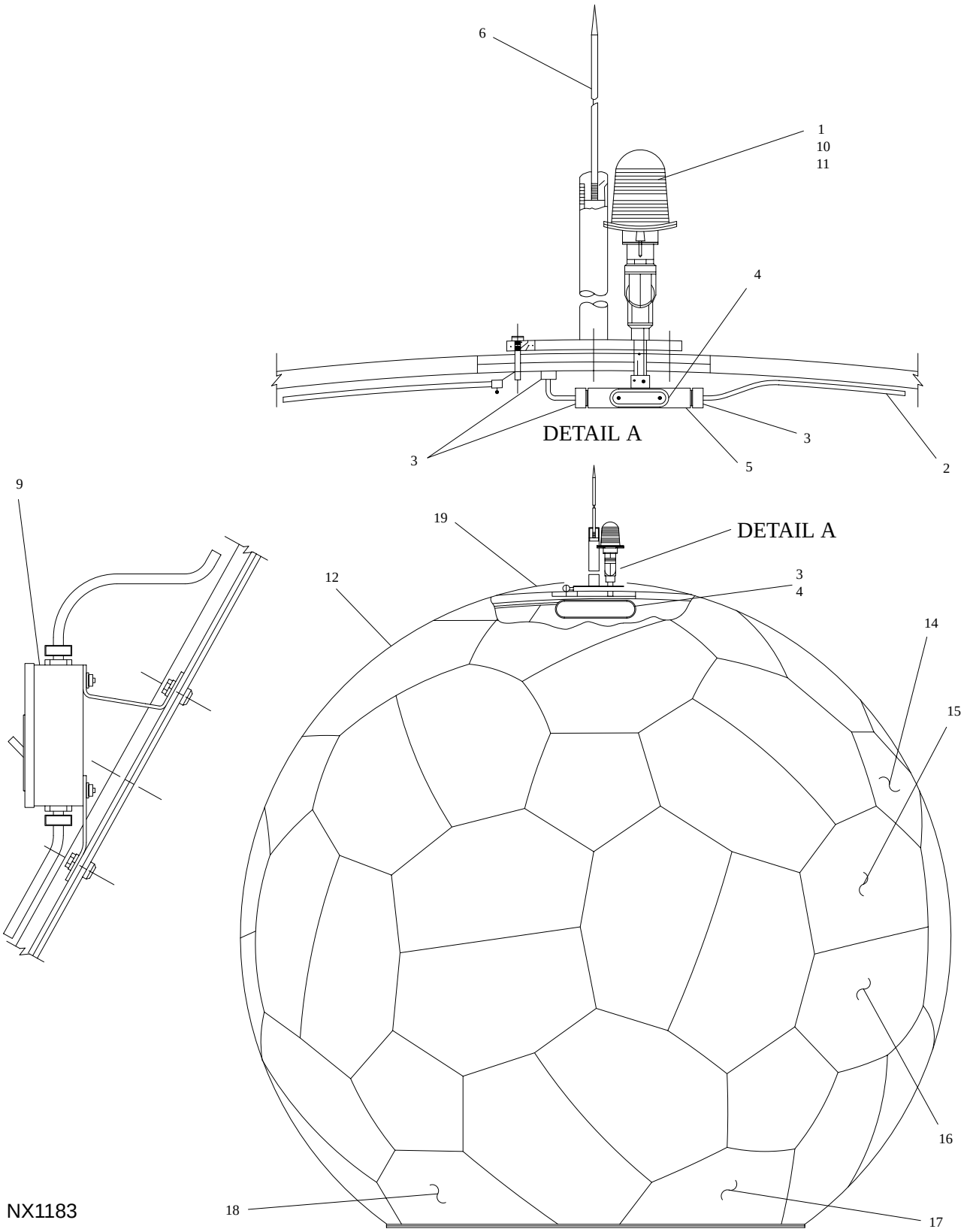

FIGURE 39. Radome, UD12

Section II. Maintenance Parts List

FIGURE AND INDEX NO.	REF DES	PART NUMBER	INDENT	DESCRIPTION	CAGE CODE	QTY PER ASSY	CODES SMR	CODES USABLE ON
39−	12	8531−1	1	RADOME (For NHA see FIGURE 1 on Page 2 − 1)	15175	REF	PDFDD	
39−1	12A1 *	8531−2	2	LIGHT ASSEMBLY, AIRCRAFT WARNING	15175	1	XB	
	12A1 *	8552−24	2	LIGHT ASSEMBLY, AIRCRAFT WARNING (Replaces PN 8531−2)	15175	1	PAOOO	
39−2		2043−2−14	3	CABLE, TYPE SJ, 2 CON	15175	70 FT	PAOZZ	
39−3	12W1	2035−34−25	3	CONNECTOR, STRAIN	15175	3	PAOZZ	
				(ATTACHING PARTS)				
		B705−219	3	CLAMP, HATCH FASTENER	15175	6	PAOZZ	
		831−3816	3	NUT, HEX, NO.3/8−16	15175	6	PAOZZ	
		850−38−NS	3	WASHER, FLAT, 3/8 IN.	15175	6	PAOZZ	
				− − − − − − − − −				
39−4	12MS1	2048−RG	3	GASKET, NEOPRENE	15175	1	PCOZZ	
39−5	12MS2	2049−34T	3	CONDUIT, OUTLET	15175	1	PAOZZ	
39−6	12MS4	705−174−5	3	LIGHTNING ROD	15175	1	PAFZZ	
39−7	12MS4−1 **	8552−74	3	5 ROD LIGHTNING ARRAY	15175	1	PAFDD	
39−8	12MS6 **	8552−74−1	3	ROD, LIGHTNING (88 IN)	15175	1	PAFZZ	
39−9	12MS5	705−240	3	CIRCUIT BREAKER BOX	15175	1	PAOZZ	
39−10	12A1XDS1	824−1	3	LIGHT FIXTURE	15175	1	PAOZZ	
39−11	12A1DS1 12A1DS2	825−1	3	LAMP, AIRCRAFT WARNING (24446) (ALT PN 116A21TS)	15175	2	PAOZZ	
39−12		1529−1	2	SHELL, RADOME	15175	1	XB	
39−13	12MP8 **	2078−12−34	3	GASKET	15175	80	PAOZZ	
39−14	12MP9	B1529−11−A	3	PANEL, A	15175	10	PAFZZ	
39−15	12MP2	B1529−11−B1	3	PANEL, B1	15175	20	PAFZZ	
39−16	12MP3	B1529−11−B2	3	PANEL, B2	15175	25	PAFZZ	
39−17	12MP4	B1529−13−B1X	3	PANEL, B1X	15175	5	PAFZZ	
39−18	12MP5	B1529−13−B2X	3	PANEL, B2X	15175	5	PAFZZ	
39−19	12MP11	B1529−12−AZ	3	PANEL, ZENITH	15175	1	PAFZZ	
39−20	12MP6 **	2178−3816−58	3	BOLT, RADOME PANEL	15175	AR	PAOZZ	
39−21	12MP10 **	8531−4	3	ZENITH HATCH ASSEMBLY	15175	1	PAFDD	
39−22	12MP10MP1 **	B705−219	3	CLAMP, HATCH FASTENER	15175	1	PAOZZ	
	NOTE * : SITE DEPENDENT NOTE ** : NOT SHOWN							

FIGURE AND INDEX NO.	REF DES	PART NUMBER	INDENT	DESCRIPTION	CAGE CODE	QTY PER ASSY	CODES	
							SMR	USABLE ON
39−23	12MP7 **	2265−112−18	3	GASKET, SILICON SPONGE, 1/8 IN. THK	15175	1	PCOZZ	
39−24	12A2 **	70020	2	RELAY, TOWER, LIGHTING, WARNING LIGHT FAILURE DETECTION	18192	1	PAOZZ	
	NOTE * : SITE DEPENDENT NOTE ** : NOT SHOWN							

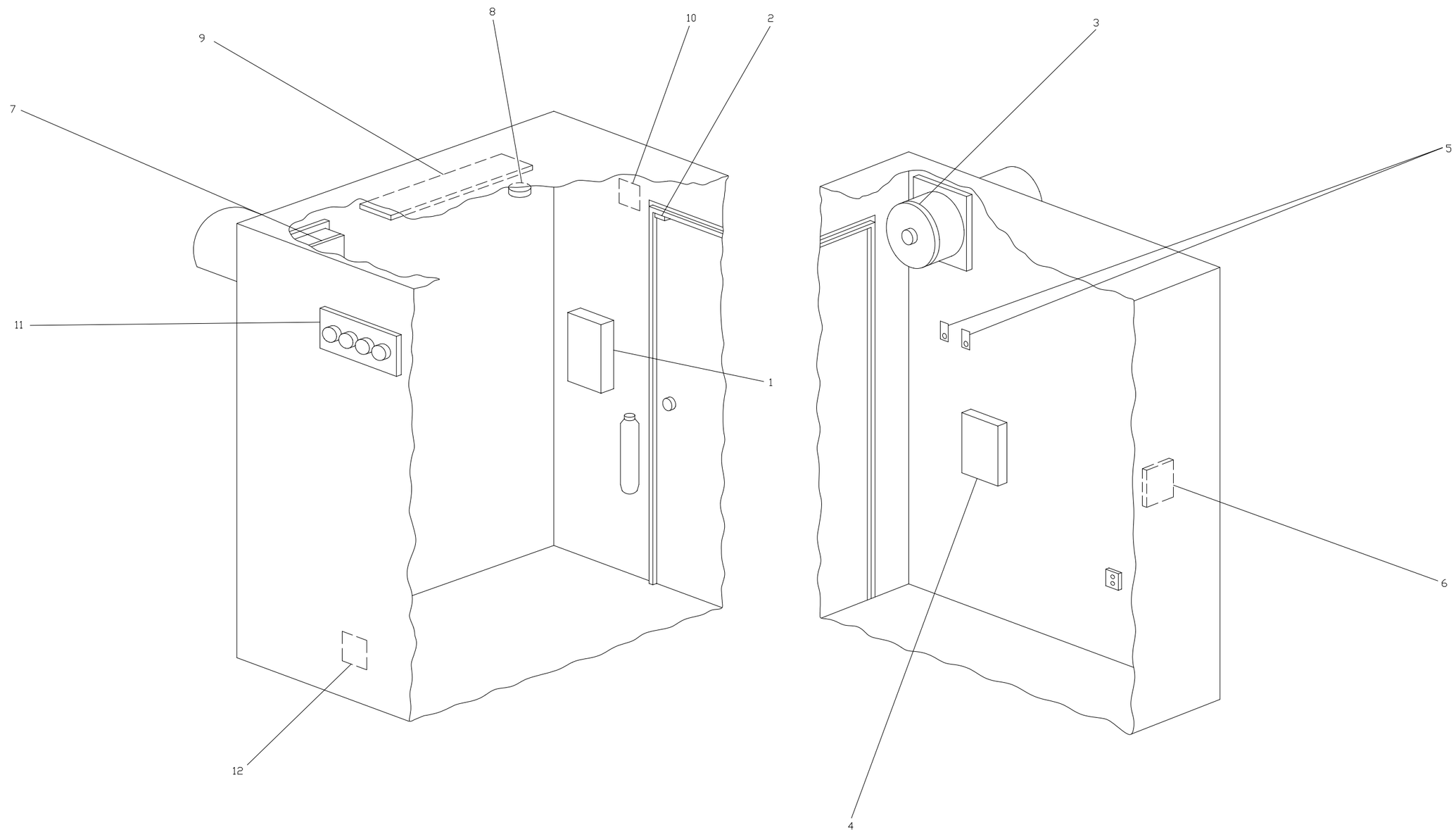

NX1184

FIGURE 40. MLOS Equipment Shelter, UD13

FIGURE AND INDEX NO.	REF DES	PART NUMBER	INDENT	DESCRIPTION	CAGE CODE	QTY PER ASSY	CODES	
							SMR	USABLE ON
40−	13	D−1389−1	1	SHELTER, MLOS EQUIPMENT (For NHA see FIGURE 34 on Page 2 − 299)	0E2J5	REF	XC	
40−1	13A1	CH12BB	2	POWER DISTRIBUTION PANEL	08372	1	PAOZZ	
40−2	13S3	39−2GY	2	SWITCH, DOOR ALARM, MAGNETIC (0E2J5) (ALT PN 13272)	33240	1	PAOZZ	
40−3	13B1	4C365	2	EXHAUST FAN W/DAMPER	56950	1	PAODD	
40−4	13HR1	2E440A	2	HEATER, 3.0 KW WITH SURFACE MOUNT	56950	1	PAODD	
40−5	13S1 13S2	2E206	2	THERMOSTAT, TRANSMITTER (0E2J5) (ALT PN 10877)	25795	2	PAOZZ	
40−6	13A2	A−6N64	2	ALARM TERMINATION PANEL	56950	1	PAOZZ	
40−7	13A3	4C038	2	DAMPER ASSEMBLY	56950	1	PAOOO	
40−8	13A4	DU−3	2	IONIZED SMOKE DETECTOR	3Y484	1	PAOZZ	
40−9	13DS2 13DS3	CA−2224−4	2	FLUORESCENT LIGHT FIXTURE	56950	2	XB	
40−10	13DS1	3650	2	EXTERIOR LIGHT (0E2J5) (ALT PN 10278)	52770	1	PAOZZ	
40−11	13A12	B575	2	PLATE, WAVEGUIDE ENTRY	56950	1	PAOZZ	
40−12		P215C	2	PROTECTOR, AC POWER LINE, 120VAC, 15A	29779	1	PAOZZ	

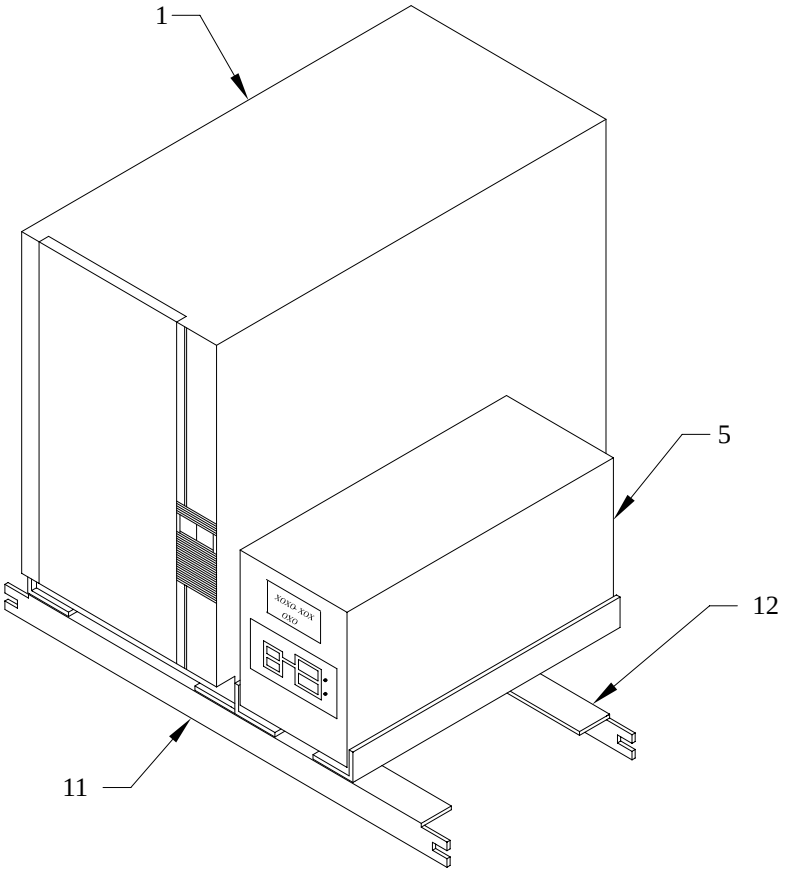

NX1185

FIGURE 41. Level II Recorder Equipment, UD16 (Sheet 1 of 3)

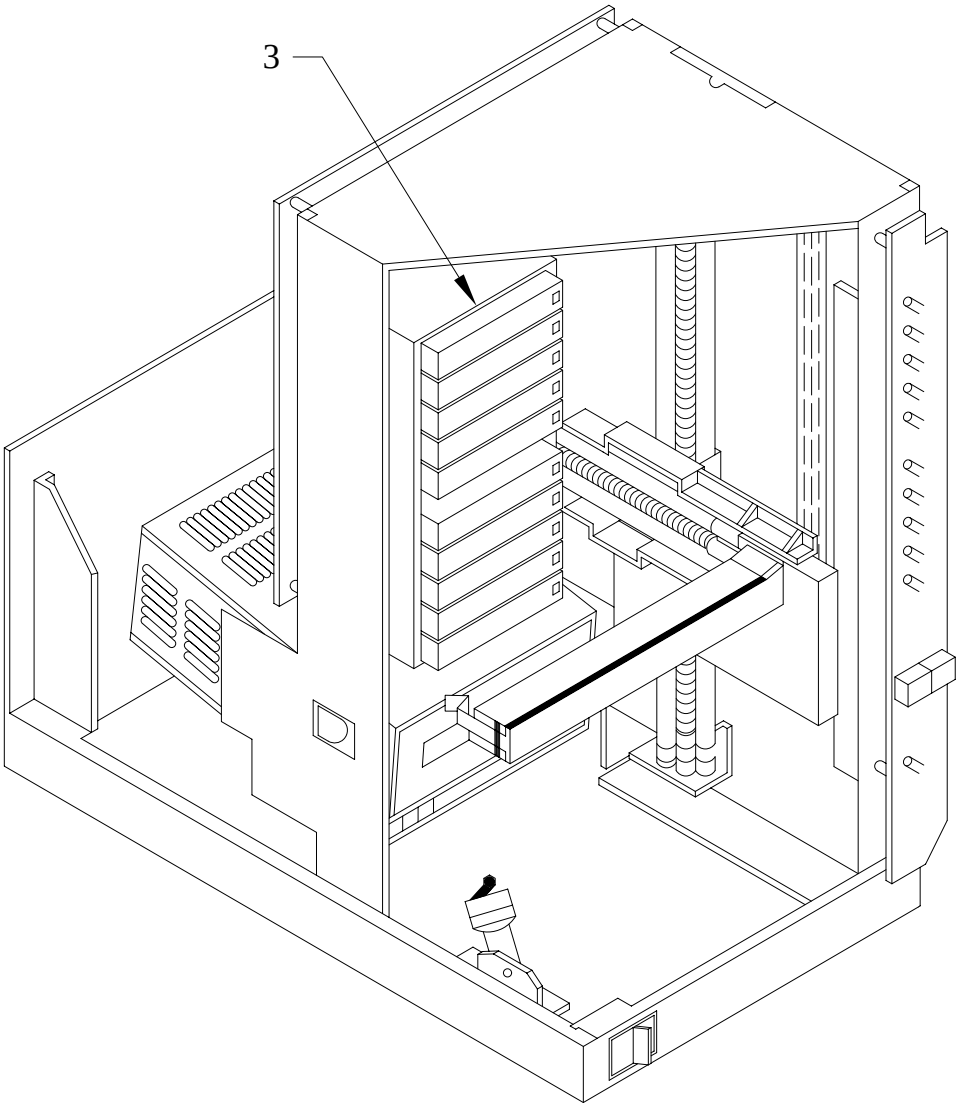

CARTRIDGE HANDLING SUBSYSTEM

NX1186

FIGURE 41. Level II Recorder Equipment, UD16 (Sheet 2 of 3)

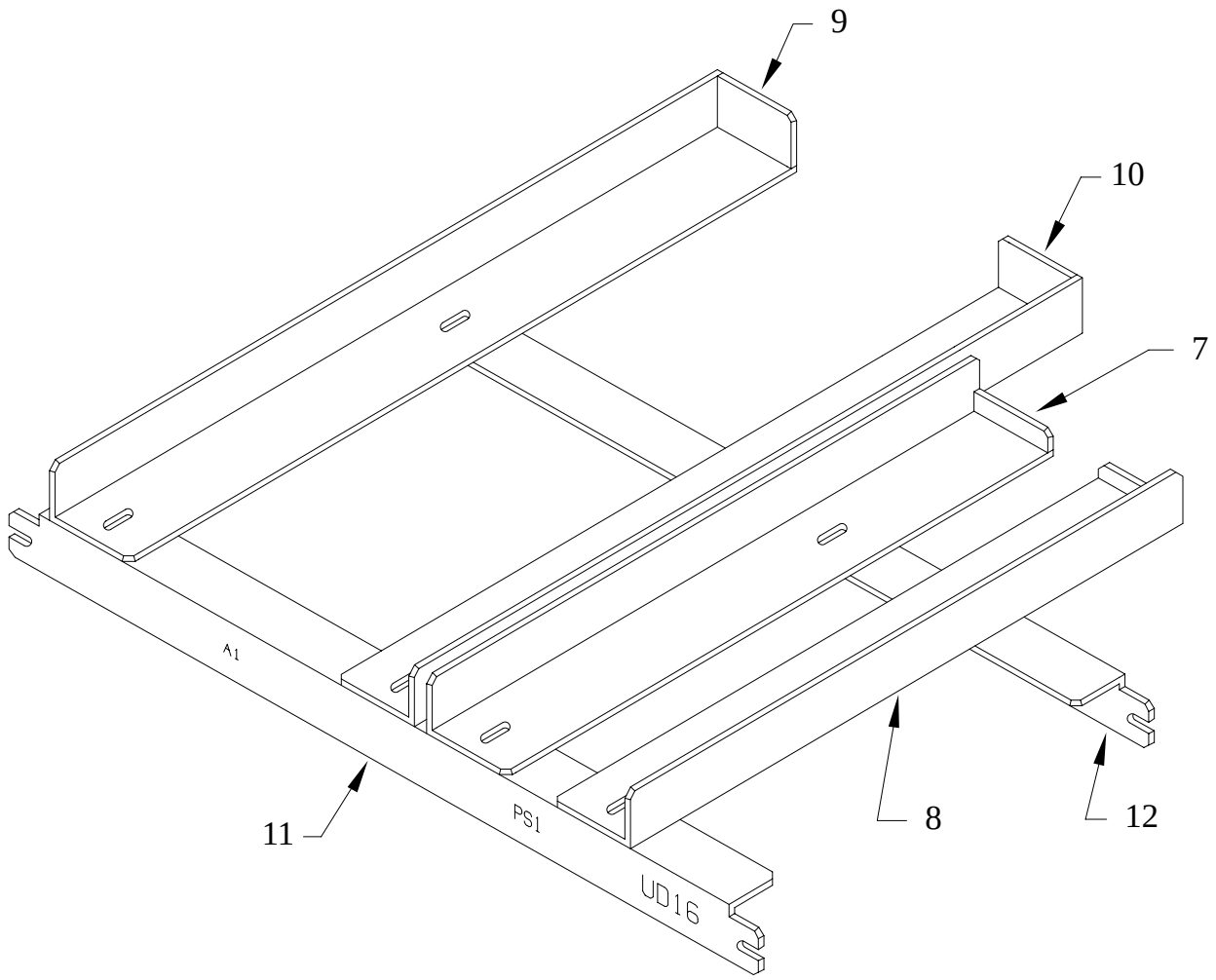

BRACKET ASSEMBLY COMPONENT LAYOUT

NX1187

FIGURE 41. Level II Recorder Equipment, UD16 (Sheet 3 of 3)

FIGURE AND INDEX NO.	REF DES	PART NUMBER	INDENT	DESCRIPTION	CAGE CODE	QTY PER ASSY	CODES SMR	CODES USABLE ON
41−	16		1	LEVEL II RECORDER (For NHA see FIGURE 20 on Page 2 − 207)	0WY55	REF	AD	
41−1	16A1	831005−025	2	RECORDING SYSTEM (0WY55) (spec dwg 2200001−209)	0FS56	1	PAODD	
41−2	16W901 **	17508	2	POWER CORD (0WY55) (spec dwg 2200001−206)	2W733	1	XB	
41−3	16A2	727361	2	RACK, 8MM TAPE 10 POSITION (0WY55) (spec dwg 2200001−205)	0FS56	1	PAOZZ	
41−4	16AT1 **	002202	2	TERMINATOR (0WY55) (spec dwg 2200001−204)	0FS56	1	PAOZZ	
41−5	16PS1	BK650M	2	POWER SUPPLY, UNINTERRUPTED (55297) (ALT PN PRB650) (0WY55) (spec dwg 2200000−201)	0MG77	1	PAOZZ	
41−6	16W900 **	2320000−301	2	CABLE ASSEMBLY	0WY55	1	PAOZZ	
41−7	16MP5	2310001−301	2	RAIL−UPS, LEFT	0WY55	1	PAOZZ	
				(ATTACHING PARTS)				
		MS51958−64	2	SCREW	96906	2	PAOZZ	
		MS15795−808	2	WASHER	96906	2	PAOZZ	
		MS35338−138	2	WASHER	96906	2	PAOZZ	
				− − − − − − − − −				
41−8	16MP6	2310001−302	2	RAIL−UPS, RIGHT	0WY55	1	PAOZZ	
				(ATTACHING PARTS)				
		MS51958−64	2	SCREW	96906	2	PAOZZ	
		MS15795−808	2	WASHER	96906	2	PAOZZ	
		MS35338−138	2	WASHER	96906	2	PAOZZ	
				− − − − − − − − −				
41−9	16MP3	2310002−301	2	RAIL−CRTG HDLG SS, LEFT	0WY55	1	PAOZZ	
				(ATTACHING PARTS)				
		MS51958−64	2	SCREW	96906	2	PAOZZ	
		MS15795−808	2	WASHER	96906	2	PAOZZ	
		MS35338−138	2	WASHER	96906	2	PAOZZ	
				− − − − − − − − −				
41−10	16MP4	2310002−302	2	RAIL−CRTG HDLG SS, RIGHT	0WY55	1	PAOZZ	

NOTE * : SITE DEPENDENT
NOTE ** : NOT SHOWN

FIGURE AND INDEX NO.	REF DES	PART NUMBER	INDENT	DESCRIPTION	CAGE CODE	QTY PER ASSY	CODES SMR	CODES USABLE ON
				(ATTACHING PARTS)				
		MS51958−64	2	SCREW	96906	2	PAOZZ	
		MS15795−808	2	WASHER	96906	2	PAOZZ	
		MS35338−138	2	WASHER	96906	2	PAOZZ	
				− − − − − − − − −				
41−11	16MP1	2310000−301	2	BRACKET, ANGLE−LEVEL, FRONT	0WY55	1	PAOZZ	
				(ATTACHING PARTS)				
		MS51958−61	2	SCREW	96906	2	PAOZZ	
		MS15795−808	2	WASHER	96906	2	PAOZZ	
		MS35338−138	2	WASHER	96906	2	PAOZZ	
				− − − − − − − − −				
41−12	16MP2	2310000−302	2	BRACKET, ANGLE−LEVEL, REAR	0WY55	1	PAOZZ	
				(ATTACHING PARTS)				
		MS51958−61	2	SCREW	96906	2	PAOZZ	
		MS15795−808	2	WASHER	96906	2	PAOZZ	
		MS35338−138	2	WASHER	96906	2	PAOZZ	
				− − − − − − − − −				
	NOTE * : SITE DEPENDENT NOTE ** : NOT SHOWN							

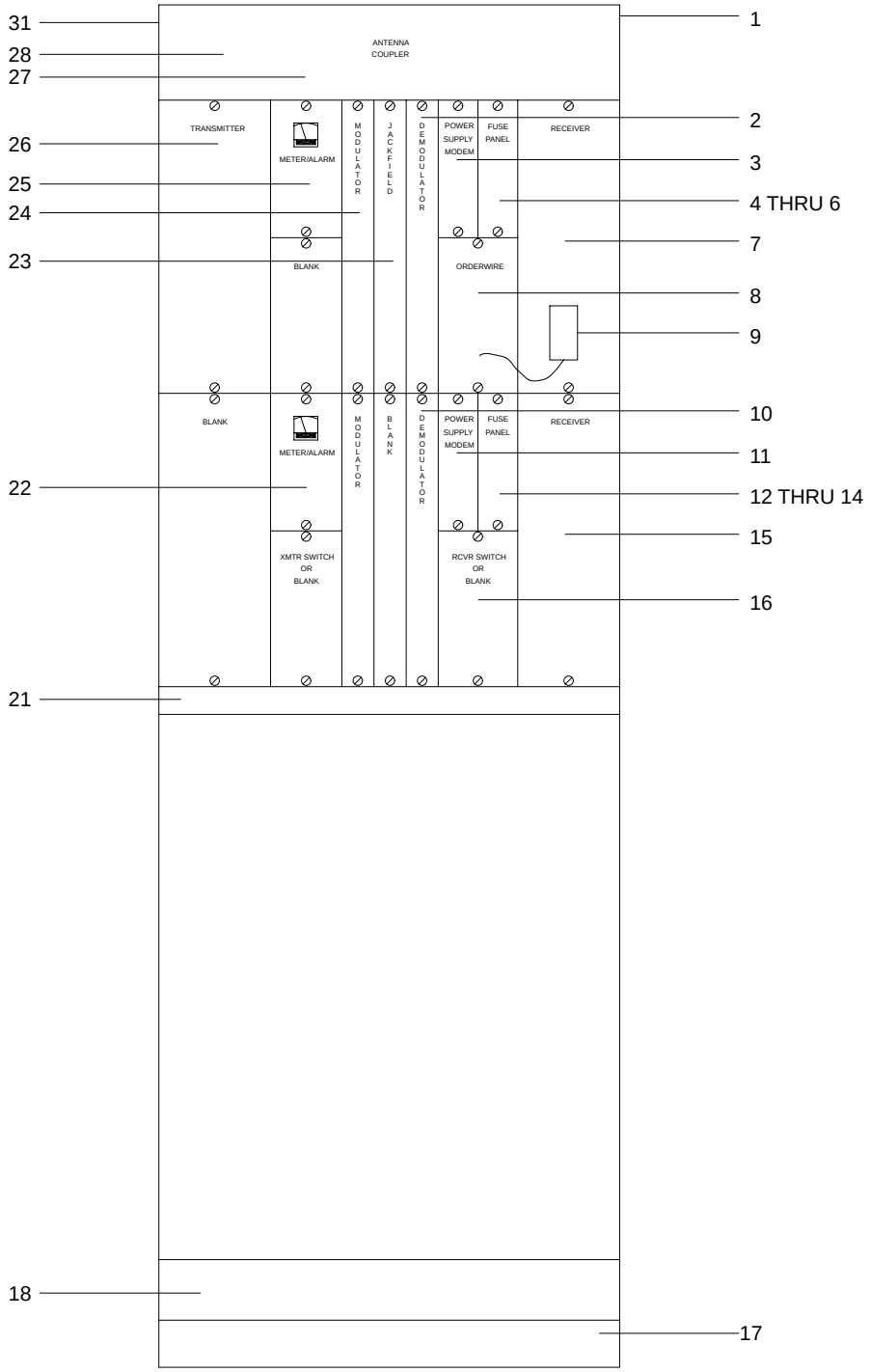

NX1188

FIGURE 42. Microwave Radio, UD19

FIGURE AND INDEX NO.	REF DES	PART NUMBER	INDENT	DESCRIPTION	CAGE CODE	QTY PER ASSY	CODES SMR	CODES USABLE ON
42−	19 **	1214904−XXX	1	MICROWAVE RADIO (For NHA see FIGURE 34 on Page 2 − 299)	56232	REF	AD	
42−1		MA−94146	2	TERMINAL BLOCK	56950	1	XB	
42−2	19A7	97530−M2	2	PANEL, DEMODULATOR	34371	1	PAOLD	
42−3	19A8	97018	2	PANEL, POWER SUPPLY	34371	1	PAOLD	
42−4	19A9	97256	2	PANEL, FUSE	34371	1	PAODD	
42−5	19A9F1	075−20028−18	3	FUSE, 3 AMP	56950	1	PAOZZ	
42−6	19A9F2	075−20028−16	3	FUSE, 2.5 AMP	56950	1	PAOZZ	
42−7	19A10 ***	96882	2	RECEIVER, A	34371	1	PAOLD	
42−8	19A11	97274−M2	2	ORDERWIRE	34371	1	PAOLD	
42−9	19A11A1	HANDSET	2	HANDSET, TELEPHONE	56950	1	XB	
42−10	19A13	97530−M2	2	PANEL, DEMODULATOR	34371	1	PAOLD	B
42−11	19A14	97018	2	PANEL, POWER SUPPLY	56950	1	PAOLD	B
42−12	19A15	97256	2	PANEL, FUSE	34371	1	PAODD	B
42−13	19A15F1	075−20028−18	3	FUSE, 3 AMP	56950	1	PAOZZ	B
42−14	19A15F2	075−20028−16	3	FUSE, 2.5 AMP	56950	1	PAOZZ	B
42−15	19A16 ***	96882	2	RECEIVER, B	34371	1	PAOLD	B
42−16	19A17	97260	2	SWITCH, RECEIVER	34371	1	PAOLD	B
42−17		MA−90031	2	GUARD RAIL AND AC OUTLET	56950	1	XB	
42−18	19A38MP1	LRA−15	2	ADAPTER, RACK, POWER SUPPLY	80103	1	PAOZZ	
42−19	19A38PS1 *	LRS−53−24	2	POWER SUPPLY	55021	1	PAOLD	
42−20	19A38PS2 *	LRS−53−24	2	POWER SUPPLY	55021	1	PAOLD	B
42−21	19A19	001725	2	REMOTE STATION, FAULT ALARM SYSTEM	0VDS2	1	PAOLD	
42−22	19A12	97246−M2	2	PANEL, METER ALARM	34371	1	PAOLD	B
42−23	19A6	97252	2	PANEL, JACKFIELD	34371	1	PBOZZ	
42−24	19A5	97529−M2	2	PANEL, MODULATOR	34371	1	PAOLD	
42−25	19A4	97246−M2	2	PANEL, METER ALARM	34371	1	PAOLD	
42−26	19A3 ***	96881	2	TRANSMITTER	34371	1	PAOLD	
42−27	19A2	96878	2	COUPLER, ANTENNA	34371	1	PAOLD	
42−28	19A1	020−98655−001	2	BANDPASS FILTER ASSEMBLY	56950	1	PAOZZ	

NOTE * : NOT SHOWN
NOTE ** : SITE DEPENDENT
NOTE *** : FREQUENCY SPECIFIC

FIGURE AND INDEX NO.	REF DES	PART NUMBER	INDENT	DESCRIPTION	CAGE CODE	QTY PER ASSY	CODES SMR	CODES USABLE ON
42−29	19A1FL1 *	IF−1800−400−3−N	3	FILTER, BANDPASS	12598	AR	PAODD	
42−30	19A1FL2 *	IF−1800−400−3−N	3	FILTER, BANDPASS	12598	AR	PAODD	B
42−31		65−39−600−000	2	CABINET, EMI	9T955	1	XB	
		USABLE ON CODES A − RDA NON−DIVERSITY B − RDA SPACE DIVERSITY						
	NOTE * : NOT SHOWN NOTE ** : SITE DEPENDENT NOTE *** : FREQUENCY SPECIFIC							

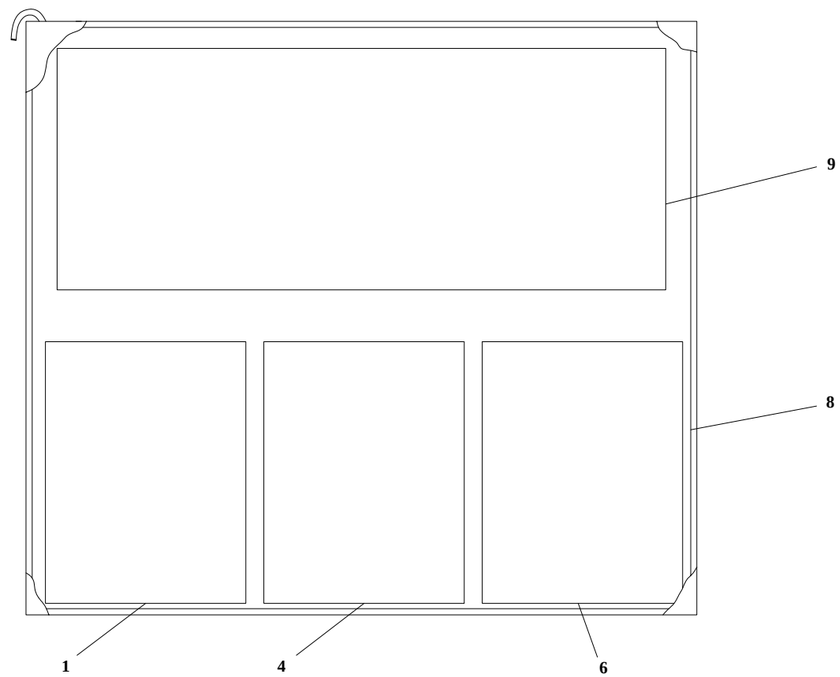

TOP VIEW

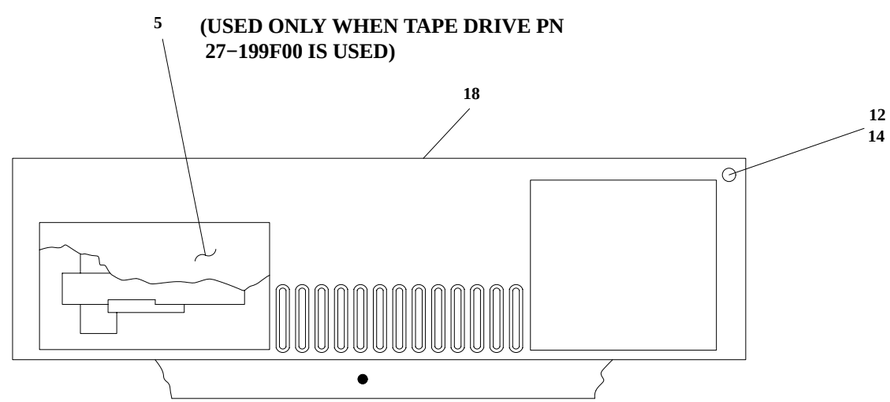

NX1194

FRONT VIEW (WITH COVER)

CABLE ASSEMBLIES (NOT SHOWN)

INDEX NO.	REF DES	FROM	TO
43−12	−	TB2	FRONT PANEL
43−13	−	TB2 TB3	P1(A9A3) P2(A9A1) P3(A9A2)

FIGURE 43. SCSI Enclosure Assembly, UD21A9 and UD41A15

FIGURE AND INDEX NO.	REF DES	PART NUMBER	INDENT	DESCRIPTION	CAGE CODE	QTY PER ASSY	CODES SMR	CODES USABLE ON
43−	21A9 ** 21A12 *** 41A15	92−390F02MXXRXX	1	SCSI ENCLOSURE ASSEMBLY (For NHA see FIGURE 46 on Page 2 − 365)	30331	REF	XC	
43−1	21A9A1 ** 21A12A1 *** 41A15A1	27−199F00MXXRXX	2	TAPE DRIVE, 1/4 IN.	30331	1	PAOLD	
43−2	5A5A1C01 *	DC 600A	2	TAPE, CARTRIDGE, MAGNETIC, DATA STORAGE (SCSI)	52327	1	PAOZZ	
43−3	5A5A1C02 *	102791−12	2	KIT, HEAD CLEANING 1/4 IN CARTRIDGE DRIVE (SCSI)	60902	1	PAOZZ	
43−4	21A9A1MS3 *** 41A15A1MS3	93−ADLF00MXXRXX	2	COVER, FRONT PANEL	30331	1	PAOZZ	
43−5	21A9A2 ** 21A12A2 *** 41A15A2	27−204F00MXXRXX	2	DISK DRIVE, 600MB	30331	1	PAOLD	
43−6	21A9A3 ** 21A12A3 *** 41A15A3	97−249F00MXXRXX	2	OPTICAL DISC DRIVE	30331	1	PAODD	
	21A9A3MP1	D350492	3	KNOB	0ZA57	1	PAOZZ	
	21A9A3MP2	D350493	3	KNOB AND BEZEL KIT	0ZA57	1	PAOZZ	
43−7	21A9A3D1 * 41A15A3D1	LM 510	2	DISK, OPTICAL	8J962	1	PAOZZ	
43−8	21A9A4 *** 21A12A4 41A15A4	93−527F00MXXRXX	2	SCSI ENCLOSURE ASSEMBLY W/POWER SUPPLY	30331	1	PBOZZ	
43−9	21A9PS1 *** 21A12PS1 41A15PS1	34−046F01MXXRXX	3	POWER SUPPLY, +12, +5V, SCSI (0KY32) (ALT PN SQV400−1222)	30331	1	PAOLD	
43−10	21A9PS1F2 * 21A12PS1F2 41A15PS1F2	217 3.17	3	FUSE, 250V, 3.15A	75915	1	PAOZZ	
43−11	21A9MS1 * ***	17−834F00MXXRXX	3	GROUND STRAP	30331	1	PAOZZ	
43−12	21A9W3 *** 21A12W3 41A15W3	17−873F00MXXRXX	3	CABLE, FRONT PANEL	30331	1	PAOZZ	
43−13	***	17−928F00MXXRXX	3	CABLE, POWER, 5/12 VDC	30331	1	PAOZZ	
43−14	21A9DS1 *** 41A15DS1 21A12DS1	33−053F00MXXRXX	2	LED (28480) (ALT PN HLMP−3300)	30331	1	PAOZZ	

NOTE * : NOT SHOWN

NOTE ** : SITE DEPENDENT

NOTE *** : REQUISITION HIGHEST REVISION LEVEL NSN MANAGED BY SOURCE OF SUPPLY (SOS) G13 OR S9_

FIGURE AND INDEX NO.	REF DES	PART NUMBER	INDENT	DESCRIPTION	CAGE CODE	QTY PER ASSY	CODES SMR	CODES USABLE ON
43−15	* ***	93−626F00MXXRXX	2	FAN PANEL ASSEMBLY	30331	1	PAOOO	
43−16	* ***	36−011F00MXXRXX	3	FAN, MUFFIN	30331	2	PAOZZ	
43−17	* ***	95−579F00MXXRXX	3	CABLE, FAN POWER	30331	1	PAOZZ	
43−18	5A5MP21 *** 41A15MP21	14−847F00MXXRXX	2	COVER, SCSI	30331	1	PAOZZ	

NOTE * : NOT SHOWN

NOTE ** : SITE DEPENDENT

NOTE *** : REQUISITION HIGHEST REVISION LEVEL NSN MANAGED BY SOURCE OF SUPPLY (SOS) G13 OR S9_

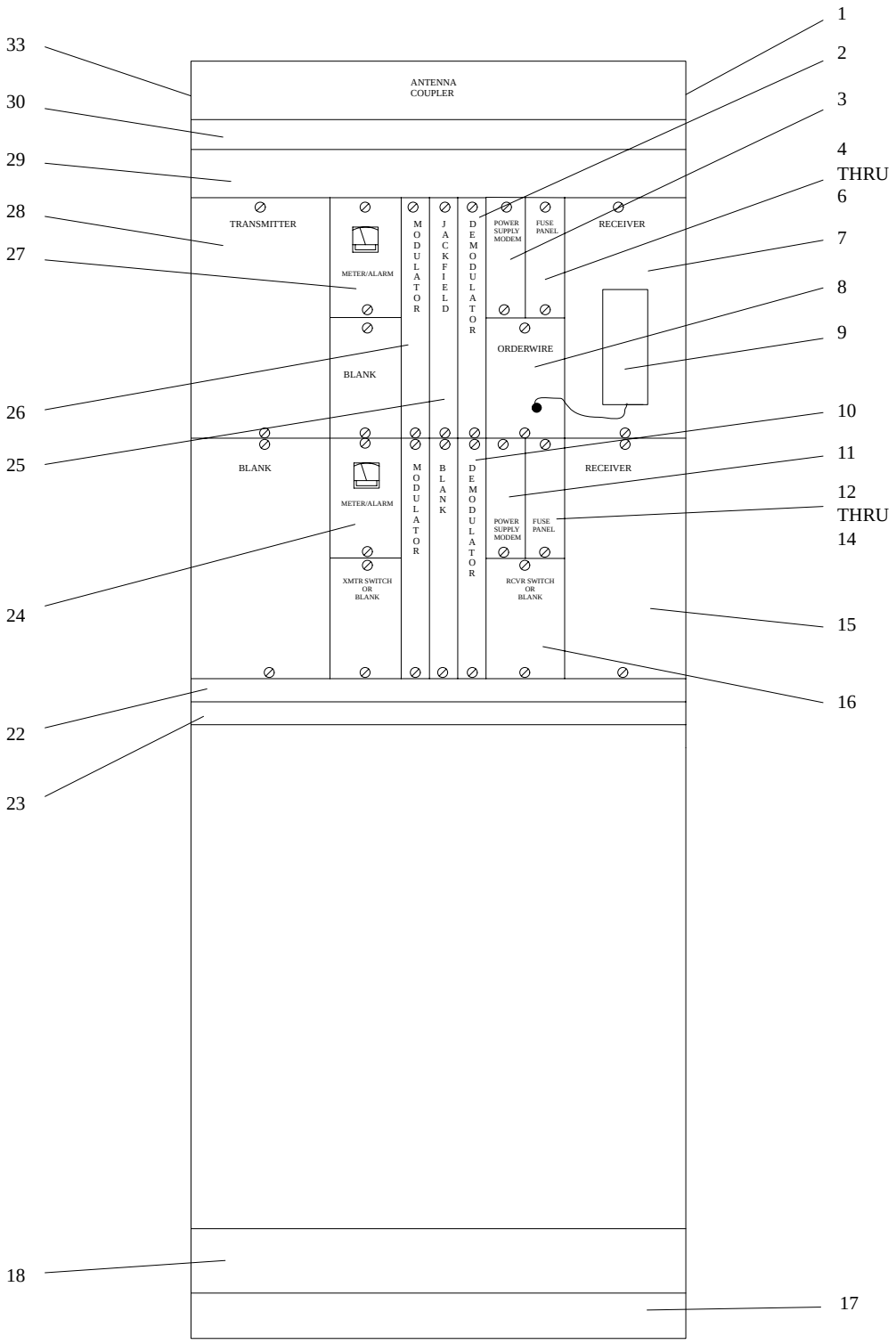

NX1201

FIGURE 44. Microwave Radio, UD39

FIGURE AND INDEX NO.	REF DES	PART NUMBER	INDENT	DESCRIPTION	CAGE CODE	QTY PER ASSY	CODES SMR	CODES USABLE ON
44−	39 **	1214904−XXX	1	MICROWAVE RADIO (For NHA see FIGURE 34 on Page 2 − 299)	56232	REF	AD	A
44−1		MA−94146	2	TERMINAL BLOCK	56950	1	XB	
44−2	39A7	97530−M2	2	PANEL, DEMODULATOR	34371	1	PAOLD	
44−3	39A8	97018	2	PANEL, POWER SUPPLY	34371	1	PAOLD	
44−4	39A9	97256	2	PANEL, FUSE	34371	1	PAODD	
44−5	39A9F1	075−20028−18	2	FUSE, 3 AMP	56950	1	PAOZZ	
44−6	39A9F2	075−20028−16	2	FUSE, 2.5 AMP	56950	1	PAOZZ	
44−7	39A10 ***	96882	2	RECEIVER, A	34371	1	PAOLD	
44−8	39A11	97274−M2	2	ORDERWIRE	34371	1	PAOLD	
44−9	39A11A1	HANDSET	3	HANDSET, TELEPHONE	56950	1	XB	
44−10	39A13	97530−M2	2	PANEL, DEMODULATOR	34371	1	PAOLD	B
44−11	39A14	97018	2	PANEL, POWER SUPPLY	34371	1	PAOLD	B
44−12	39A15	97256	2	PANEL, FUSE	34371	1	PAODD	B
44−13	39A15F1	075−20028−18	2	FUSE, 3 AMP	56950	1	PAOZZ	B
44−14	39A15F2	075−20028−16	2	FUSE, 2.5 AMP	56950	1	PAOZZ	B
44−15	39A16 ***	96882	2	RECEIVER, B	34371	1	PAOLD	B
44−16	39A17	97260	2	SWITCH, RECEIVER	34371	1	PAOLD	B
44−17		MA−90031	2	GUARD RAIL AND AC OUTLET	56950	1	XB	
44−18	39A38MP1	LRA−15	2	ADAPTER, RACK, POWER SUPPLY	80103	1	PAOZZ	A
44−19	39A38PS1 *	LRS−53−24	2	POWER SUPPLY	55021	1	PAOLD	
44−20	39A38PS2 *	LRS−53−24	2	POWER SUPPLY	55021	1	PAOLD	B
44−21	39A18M1 *	ME721B−M	2	MODEM, SHORT HAUL, NON POWERED SYNCHRONOUS	59951	1	PAOZZ	
44−22	39A19	001725	2	REMOTE STATION, FAULT ALARM SYSTEM	0VDS2	1	PAOLD	
44−23	39A18	0011796	2	MONITORING STATION, MINIMASTER	0VDS2	1	PAODD	
44−24	39A12	97246−M2	2	PANEL, METER ALARM	34371	1	PAOLD	B
44−25	39A6	97252	2	PANEL, JACKFIELD	34371	1	PBOZZ	
44−26	39A5	97529−M2	2	PANEL, MODULATOR	34371	1	PAOLD	
44−27	39A4	97246−M2	2	PANEL, METER ALARM	34371	1	PAOLD	

NOTE * : NOT SHOWN
NOTE ** : SITE DEPENDENT
NOTE *** : FREQUENCY SPECIFIC

Section II. Maintenance Parts List

FIGURE AND INDEX NO.	REF DES	PART NUMBER	INDENT	DESCRIPTION	CAGE CODE	QTY PER ASSY	CODES SMR	CODES USABLE ON
44−28	39A3 ***	96881	2	TRANSMITTER	34371	1	PAOLD	
44−29	39A2	96878	2	COUPLER, ANTENNA	34371	1	PAOLD	
44−30	39A1	020−98655−001	2	BANDPASS FILTER ASSEMBLY	56950	1	PAOZZ	
44−31	39A1FL1 *	IF−1800−400−3−N	3	FILTER, BANDPASS	12598	AR	PAODD	
44−32	39A1FL2 *	IF−1800−400−3−N	3	FILTER, BANDPASS	12598	AR	PAODD	B
44−33		65−39−600−000	2	CABINET, EMI	9T955	1	XB	

USABLE ON CODES

A − RPG NON−DIVERSITY

B − RPG SPACE DIVERSITY

NOTE * : NOT SHOWN

NOTE ** : SITE DEPENDENT

NOTE *** : FREQUENCY SPECIFIC

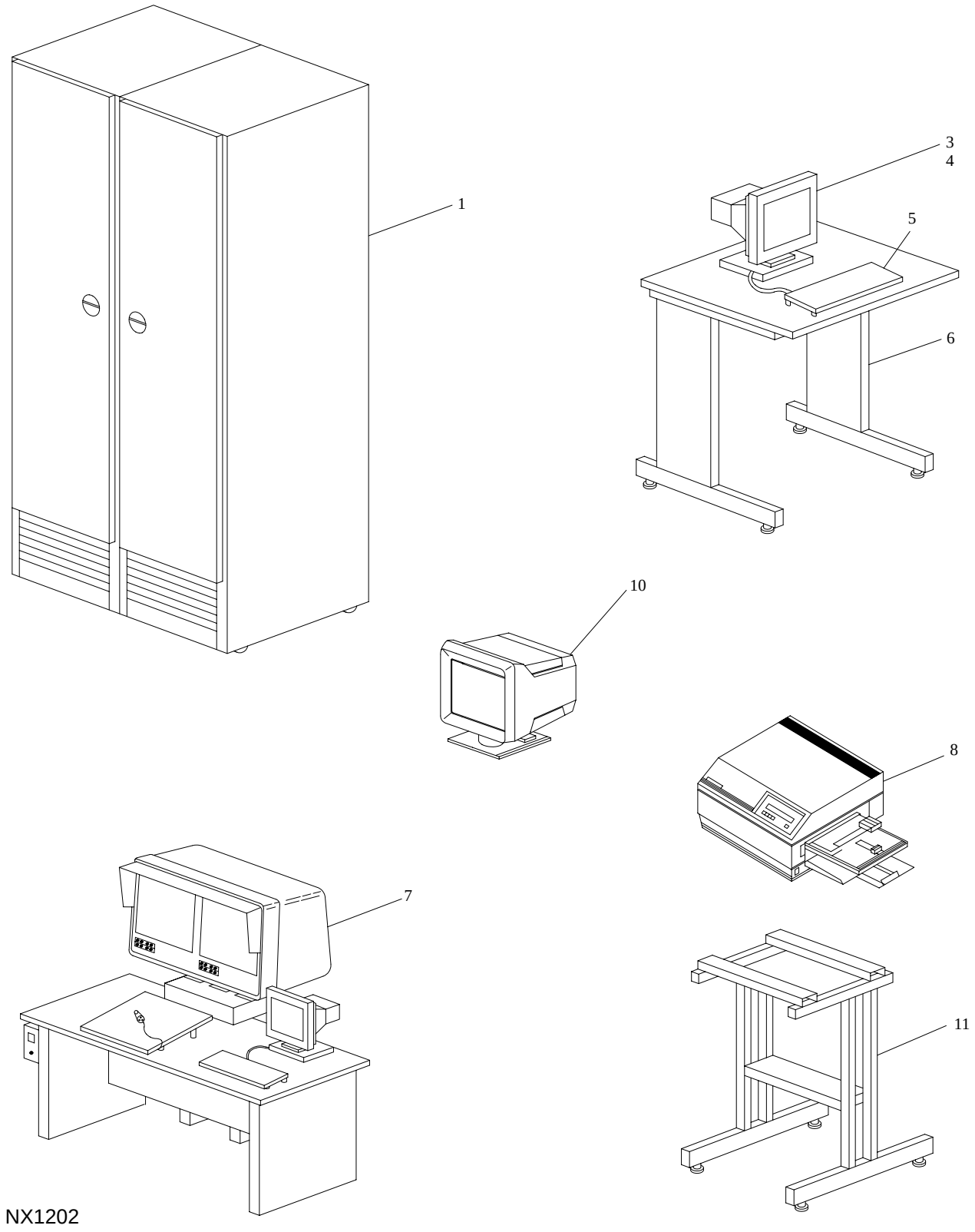

FIGURE 45. Principal User Processor Group (Sheet 1 of 2)

CABLE ASSEMBLIES (NOT SHOWN)

INDEX NO.	REF DES	FROM	TO	USABLE ON CODE
45−15	W215	P1(22J17)	P2(42SES2−AUX)	A,B
45−18	W301	P1(41J4)	P2(45A1B−IN)	
45−22	W302	P1(41J5)	P2(45A1G−IN)	
45−26	W303	P1(41J6)	P2(45A1R−IN)	
45−30	W304	P1(41J7)	P2(45A2B−IN)	
45−34	W305	P1(41J8)	P2(45A2G−IN)	
45−38	W306	P1(41J9)	P2(45A2R−IN)	
45−42	W307	P1(41J14)	P2(43SES1−EIA)	
45−47	W309	P1(41J13)	P2(42SES1−EIA)	
45−52	W310	P1(41J10)	P2(47J1)	
45−55	W313	P1(41FL1J1)	P2(120V/3 PHASE)	
45−58	W315	P1(41J11)	P2(44J1)	
45−61	W316	P1(41J12)	P2(46J1)	
45−63	W323	P1(41J16)	P2(LEASED LINE)	
45−66	W324	P1(41J17)	P2(DIAL LINE)	
45−73	*W328	P1(41J15)	P2(22J5)	A,B
45−73	*W328	P1(41J15)	P2(A27TB1)	A,B
45−75	W330	P1(41J18)	P2(43SES2−AUX)	
45−77	W347	P1(AC−PWR)	P2(41J20)	
45−80	W348	P1(41J4)	P2(48B−IN)	
45−82	W349	P1(41J5)	P2(48G−IN)	
45−84	W350	P1(41J6)	P2(48R−IN)	
45−86	W351	P1(45A2B)	P2(50B−IN)	A,B
45−88	W352	P1(45A2G−IN)	P2(50G−IN)	A,B
45−90	W353	P1(45A2R−IN)	P2(50R−IN)	A,B
45−92	W359	P1(41J7)	P2(51B−IN)	
45−94	W360	P1(41J8)	P2(51G−IN)	
45−96	W361	P1(41J9)	P2(51R−IN)	
45−98	W365	P1(41J14)	P2(45J3)	

* SITE DEPENDENT

FIGURE 45. Principal User Processor Group (Sheet 2 of 2)

FIGURE AND INDEX NO.	REF DES		PART NUMBER	INDENT	DESCRIPTION	CAGE CODE	QTY PER ASSY	CODES SMR	CODES USABLE ON
45−		*	1214780−XXX	1	PRINCIPAL USER PROCESSOR GROUP	56232	REF	XC	A
		*	1219747−XXX	1	PRINCIPAL USER PROCESSOR GROUP	56232	REF	XC	B
		*	1221826−XXX	1	PRINCIPAL USER PROCESSOR GROUP	56232	REF	XC	C
45−1	41	*	1525326−XXX	2	PUP DATA PROCESSOR (For breakdown see FIGURE 46 on Page 2 − 365)	56232	1	PDOOD	A
	41	*	1219745−XXX	2	PUP DATA PROCESSOR (For breakdown see FIGURE 46 on Page 2 − 365)	56232	1	PDOOD	B
	41	*	1221825−XXX	2	PUP DATA PROCESSOR (For breakdown see FIGURE 46 on Page 2 − 365)	56232	1	PDOOD	C
45−2		** ***	17−854F00MXXRXX	2	CABLE, EXTERNAL/CRT, 25 FT	30331	1	PAOOO	
45−3	42A1	* ***	27−211F01MXXRXX	2	MONITOR, CDT100	30331	1	PAOLD	
45−4		**	239001 OR 239002	3	FUSE (When replacing fuse, ensure correct fuse is installed; 1 Amp (239001) or 2 Amp (239002))	75195	1	PAOZZ	
45−5	42A2	***	27−212F01MXXRXX	2	KEYBOARD, CDT100 (53073) (ALT PN 598−0004322) (53073) (ALT PN 598−0012175)	30331	1	PAOZZ	
45−6		*	1214782−201	2	STAND, TERMINAL	56232	1	XB	
45−7			1213666−301	2	PUP WORKSTATION (For breakdown see FIGURE 50 on Page 2 − 400)	56232	1	XC	A
			1213666−302	2	PUP WORKSTATION (For breakdown see FIGURE 50 on Page 2 − 400)	56232	1	XC	B
45−8	47		4693DX	2	COLOR IMAGE PRINTER (56232) (spec dwg 1213668−201)	80009	1	PAODD	
45−9	47−K1	**	47K1	2	REPAIR KIT	82187	1	PCOZZ	
45−10	50	*	HM−4119−D−DA	2	COLOR VIDEO MONITOR (56232) (spec dwg 1218259−201)	2X758	1	PAODD	

NOTE * : SITE DEPENDENT

NOTE ** : NOT SHOWN

NOTE *** : REQUISITION HIGHEST REVISION LEVEL NSN MANAGED BY SOURCE OF SUPPLY (SOS) G13 or S9_

FIGURE AND INDEX NO.	REF DES	PART NUMBER	INDENT	DESCRIPTION	CAGE CODE	QTY PER ASSY	CODES SMR	CODES USABLE ON
45−11		3000UP	2	STAND, OFFICE MACHINE (56232) (spec dwg 1214783−201)	0H3W3	1	PAOZZ	
45−12	**	M55339/17−00274	2	ADAPTER, CONNECTOR	81349	3	PAOZZ	A
45−13	**	1219716−301	2	CABLE, GROUND	56232	1	PAOZZ	
45−14	**	1219716−303	2	CABLE, GROUND	56232	1	PAOOO	
45−15	W215 * **	1221870−301	2	CABLE ASSEMBLY	56232	1	PAOOO	A B
	W215 * **	1214757−312	2	CABLE ASSEMBLY	56232	1	PAOOO	A B
45−16	W215P1 * **	M24308/4−2	3	CONNECTOR	81349	1	PAOZZ	A B
45−17	W215P2 * **	M24308/2−3	3	CONNECTOR	81349	1	PAOZZ	A B
45−18	W301 * **	1214807−301	2	CABLE ASSEMBLY	56232	1	PAOOO	
45−19	W301P1 W301P2 **	M39012/16−0015	3	CONNECTOR	81349	1	PAOZZ	
45−20	W301 * **	1218817−XXX	2	CABLE ASSEMBLY	56232	1	PAOOO	
45−21	W301P1 W301P2 * **	68175−1011	3	CONNECTOR, PLUG, BNC (56232) (spec dwg 1218811−201)	74868	2	PAOZZ	
45−22	W302 * **	1214807−302	2	CABLE ASSEMBLY	56232	1	PAOOO	
45−23	W302P1 W302P2 **	M39012/16−0015	3	CONNECTOR	81349	1	PAOZZ	
45−24	W302 **	1218817−XXX	2	CABLE ASSEMBLY	56232	1	PAOOO	
45−25	W302P1 W302P2 * **	68175−1011	3	CONNECTOR, PLUG, BNC (56232) (spec dwg 1218811−201)	56232	2	PAOZZ	A B
45−26	W303 * **	1214807−303	2	CABLE ASSEMBLY	56232	1	PAOOO	
45−27	W303P1 W303P2 **	M39012/16−0015	3	CONNECTOR	81349	1	PAOZZ	
45−28	W303 * **	1218817−XXX	2	CABLE ASSEMBLY	56232	1	PAOOO	

NOTE * : SITE DEPENDENT

NOTE ** : NOT SHOWN

NOTE *** : REQUISITION HIGHEST REVISION LEVEL NSN MANAGED BY SOURCE OF SUPPLY (SOS) G13 or S9_

FIGURE AND INDEX NO.	REF DES	PART NUMBER	INDENT	DESCRIPTION	CAGE CODE	QTY PER ASSY	CODES SMR	CODES USABLE ON
45−29	W303P1 ** W303P2	68175−1011	3	CONNECTOR, PLUG, BNC (56232) (spec dwg 1218811−201)	74868	2	PAOZZ	
45−30	W304 * **	1214807−304	2	CABLE ASSEMBLY	56232	1	PAOOO	
45−31	W304P1 ** W304P2	M39012/16−0015	3	CONNECTOR	81349	1	PAOZZ	
45−32	W304 **	1218817−XXX	2	CABLE ASSEMBLY	56232	1	PAOOO	
45−33	W304P1 * W304P2	68175−1011	3	CONNECTOR, PLUG, BNC (56232) (spec dwg 1218811−201)	74868	2	PAOZZ	
45−34	W305 * **	1214807−305	2	CABLE ASSEMBLY	56232	1	PAOOO	
45−35	W305P1 ** W305P2	M39012/16−0015	3	CONNECTOR	81349	1	PAOZZ	
45−36	W305 **	1218817−XXX	2	CABLE ASSEMBLY	56232	1	PAOOO	
45−37	W305P1 * W305P2	68175−1011	3	CONNECTOR, PLUG, BNC (56232) (spec dwg 1218811−201)	74868	2	PAOZZ	
45−38	W306 * **	1214807−306	2	CABLE ASSEMBLY	56232	1	PAOOO	
45−39	W306P1 ** W306P2	M39012/16−0015	3	CONNECTOR	81349	1	PAOZZ	
45−40	W306 **	1218817−XXX	2	CABLE ASSEMBLY	56232	1	PAOOO	
45−41	W306P1 * W306P2 **	68175−1011	3	CONNECTOR, PLUG, BNC (56232) (spec dwg 1218811−201)	74868	2	PAOZZ	
45−42	W307 * **	1214808−301	2	CABLE ASSEMBLY	56232	1	PAOOO	
45−43	W307P1 **	DAU−15SF0	3	CONNECTOR, RECEPTACLE, ELECTRICAL (56232) (spec dwg 1218767−202)	71468	1	PAOZZ	
45−44	W307P2 **	DBU−25SF0	3	CONNECTOR, RECEPTACLE, ELECTRICAL (56232) (spec dwg 1218767−203)	71468	1	PAOZZ	
45−45	W307 **	1218818−XXX	2	CABLE ASSEMBLY	56232	1	PAOOO	
45−46	W307P1 * **	M24308/2−2	3	CONNECTOR	81349	1	PAOZZ	

NOTE * : SITE DEPENDENT

NOTE ** : NOT SHOWN

NOTE *** : REQUISITION HIGHEST REVISION LEVEL NSN MANAGED BY SOURCE OF SUPPLY (SOS) G13 or S9_

FIGURE AND INDEX NO.	REF DES		PART NUMBER	INDENT	DESCRIPTION	CAGE CODE	QTY PER ASSY	CODES SMR	CODES USABLE ON
	W307P2	* **	M24308/2−3	3	CONNECTOR	81349	1	PAOZZ	
45−47	W309	* **	1214808−XXX	2	CABLE ASSEMBLY	56232	1	PAOOO	
45−48	W309P1	**	DAU−15SF0	3	CONNECTOR, RECEPTACLE, ELECTRICAL (56232) (spec dwg 1218767−202)	71468	1	PAOZZ	
45−49	W309P2	**	DBU−25SF0	3	CONNECTOR, RECEPTACLE, ELECTRICAL (56232) (spec dwg 1218767−203)	71468	1	PAOZZ	
45−50	W309	**	1218818−302	2	CABLE ASSEMBLY	56232	1	PAOOO	
45−51	W309P1	**	M24308/2−2	3	CONNECTOR	81349	1	PAOZZ	
	W309P2	* **	M24308/2−3	3	CONNECTOR	81349	1	PAOZZ	
45−52	W310	* **	1214811−XXX	2	CABLE ASSEMBLY	56232	1	PAOOO	
	W310	* **	1218819−XXX	2	CABLE ASSEMBLY	56232	1	PAOOO	
45−53	W310P1	* **	DBU−25PF0	3	CONNECTOR, PLUG, ELECTRICAL (56232) (spec dwg 1218768−203)	71468	1	PAOZZ	
45−54	W310P2	* **	157−32360	3	CONNECTOR, RECEPTACLE (56232) (spec dwg 1218771−201)	02660	1	PAOZZ	
45−55	W313	* **	1218201−301	2	CABLE ASSEMBLY	56232	1	PAOOO	
45−56	W313P1	* **	MS3406D18−11S	3	CONNECTOR	96906	1	PAOZZ	
45−57	W313P2	* **	WC596/137−1	3	CONNECTOR	81348	1	PAOZZ	
45−58	W315	* **	1214816−XXX	2	CABLE ASSEMBLY	56232	1	PAOOO	
	W315	* **	1218820−XXX	2	CABLE ASSEMBLY	56232	1	PAOOO	
45−59	W315P1	* **	DEU−9PF0	3	CONNECTOR, D−SUB, PLUG (56232) (spec dwg 1218768−201)	71468	1	PAOZZ	
45−60	W315P2	* **	DBU−25PF0	3	CONNECTOR, PLUG, ELECTRICAL (56232) (spec dwg 1218768−203)	71468	1	PAOZZ	

NOTE * : SITE DEPENDENT

NOTE ** : NOT SHOWN

NOTE *** : REQUISITION HIGHEST REVISION LEVEL NSN MANAGED BY SOURCE OF SUPPLY (SOS) G13 or S9_

FIGURE AND INDEX NO.	REF DES		PART NUMBER	INDENT	DESCRIPTION	CAGE CODE	QTY PER ASSY	CODES SMR	CODES USABLE ON
45−61	W316	* **	1214817−XXX	2	CABLE ASSEMBLY	56232	1	PAOOO	
	W316	* **	1218821−XXX	2	CABLE ASSEMBLY	56232	1	PAOOO	
45−62	W316P1 W316P2	* **	DEU−9PF0	3	CONNECTOR, D−SUB, PLUG (56232) (spec dwg 1218768−201)	71468	2	PAOZZ	
45−63	W323	* **	1214818−301	2	CABLE ASSEMBLY	56232	1	PAOOO	
	W323	**	1218823−301	2	CABLE ASSEMBLY	56232	1	PAOOO	
45−64	W323P1	* **	M24308/2−5	3	CONNECTOR	81349	1	PAOZZ	
	W323P1	* **	DDU−50SF0	3	CONNECTOR, RECEPTACLE, ELECTRICAL (56232) (spec dwg 1218767−205)	71468	1	PAOZZ	
45−65	W323P2	* **	57−10500−14	3	CONNECTOR, ELECTRICAL, PLUG, 50 CONTACTS (56232) (spec dwg 1214524−201)	02660	1	PAOZZ	
	W323P2	* **	157−72500−3	3	CONNECTOR, PLUG (56232) (spec dwg 1218770−201)	02660	1	PAOZZ	
45−66	W324	* **	1214819−301	2	CABLE ASSEMBLY	56232	1	PAOOO	
	W324	* **	1218823−302	2	CABLE ASSEMBLY	56232	1	PAOOO	
45−67	W324P1	* **	DDU−50SF0	3	CONNECTOR, RECEPTACLE, ELECTRICAL (56232) (spec dwg 1218767−205)	71468	1	PAOZZ	
45−68	W324P2	* **	157−72500−3	3	CONNECTOR, PLUG (56232) (spec dwg 1218770−201)	02660	1	PAOZZ	
45−69	W326	* **	1224957−301	2	CABLE ASSEMBLY	56232	1	PAODD	C
45−70	W326P1	* **	DCU−37PF0	3	CONNECTOR, ELECTRICAL, PLUG (56232) (spec dwg 1218768−204)	71468	1	PAOZZ	C
45−71		* **	17−1657−37	3	BACKSHELL, RFI/EMI (38250) (ALT PN C88000206) (56232) (spec dwg 1218764−204)	02660	1	PAOZZ	C
45−72		* **	030−1953−000	3	CONTACT, SOCKET, ELECTRICAL (56232) (spec dwg 1218765−201)	71468	4	PAOZZ	C

NOTE * : SITE DEPENDENT

NOTE ** : NOT SHOWN

NOTE *** : REQUISITION HIGHEST REVISION LEVEL NSN MANAGED BY SOURCE OF SUPPLY (SOS) G13 or S9_

FIGURE AND INDEX NO.	REF DES	PART NUMBER	INDENT	DESCRIPTION	CAGE CODE	QTY PER ASSY	CODES SMR	CODES USABLE ON
45−73	W328 * **	1214822−302	2	CABLE ASSEMBLY	56232	1	PAOOO	A B
	W328 * **	1218824−301	2	CABLE ASSEMBLY	56232	1	PAOOO	A B
	W328 * **	1218824−302	2	CABLE ASSEMBLY	56232	1	PAOOO	A B
	W328 * **	1214822−301	2	CABLE ASSEMBLY	56232	1	PAOOO	A B
45−74	W328P1 * W328P2 **	DCU−37PF0	3	CONNECTOR, ELECTRICAL, PLUG (56232) (spec dwg 1218768−204)	71468	2	PAOZZ	A B
45−75	W330 * **	1214826−XXX	2	CABLE ASSEMBLY	56232	1	PAOOO	
	W330 * **	1219650−XXX	2	CABLE ASSEMBLY	56232	1	PAOOO	
45−76	W330P1 * W330P2 **	DBU−25PF0	3	CONNECTOR, PLUG, ELECTRICAL (56232) (spec dwg 1218768−203)	71468	2	PAOZZ	
45−77	W347 **	1218725−301	2	CABLE ASSEMBLY	56232	1	PAOOO	
45−78	W347P1 **	WC596/14−2	3	CONNECTOR	81348	1	PAOZZ	
45−79	W347P2 **	WC596/13−3	3	CONNECTOR	81348	1	PAOZZ	
45−80	W348 **	1218817−319	2	CABLE ASSEMBLY	56232	1	PAOOO	
45−81	W348P1 ** W348P2	68175−1011	3	CONNECTOR, PLUG, BNC (56232) (spec dwg 1218811−201)	74868	2	PAOZZ	
45−82	W349 **	1218817−XXX	2	CABLE ASSEMBLY	56232	1	PAOOO	
45−83	W349P1 ** W349P2	68175−1011	3	CONNECTOR, PLUG, BNC (56232) (spec dwg 1218811−201)	74868	2	PAOZZ	
45−84	W350 **	1218817−XXX	2	CABLE ASSEMBLY	56232	1	PAOOO	
45−85	W350P1 ** W350P2	68175−1011	3	CONNECTOR, PLUG, BNC (56232) (spec dwg 1218811−201)	74868	2	PAOZZ	
45−86	W351 * **	1214807−310	2	CABLE ASSEMBLY	56232	1	XB	A B
45−87	W351P1 * W351P2 **	M39012/16−0015	3	CONNECTOR	81349	2	PAOZZ	A B

NOTE * : SITE DEPENDENT

NOTE ** : NOT SHOWN

NOTE *** : REQUISITION HIGHEST REVISION LEVEL NSN MANAGED BY SOURCE OF SUPPLY (SOS) G13 or S9_

FIGURE AND INDEX NO.	REF DES		PART NUMBER	INDENT	DESCRIPTION	CAGE CODE	QTY PER ASSY	CODES SMR	CODES USABLE ON
	W351P1 W351P2	* **	68175−1011	3	CONNECTOR, PLUG, BNC (56232) (spec dwg 1218811−201)	74868	2	PAOZZ	A B
45−88	W352	* **	1214807−311	2	CABLE ASSEMBLY	56232	1	PAOOO	A B
45−89	W352P1 W352P2	* **	M39012/16−0015	3	CONNECTOR	81349	2	PAOZZ	A B
	W352P1 W352P2	* **	68175−1011	3	CONNECTOR, PLUG, BNC (56232) (spec dwg 1218811−201)	74868	2	PAOZZ	A B
45−90	W353	* **	1214807−312	2	CABLE ASSEMBLY	56232	1	PAOOO	A B
45−91	W353P1 W353P2	* **	M39012/16−0015	3	CONNECTOR	81349	2	PAOZZ	A B
	W353P1 W353P2	* **	68175−1011	3	CONNECTOR, PLUG, BNC (56232) (spec dwg 1218811−201)	74868	2	PAOZZ	A B
45−92	W359	**	1218817−322	2	CABLE ASSEMBLY	56232	1	PAOOO	
45−93	W359P1 W359P2	**	68175−1011	3	CONNECTOR, PLUG, BNC (56232) (spec dwg 1218811−201)	74868	2	PAOZZ	
45−94	W360	**	1218817−323	2	CABLE ASSEMBLY	56232	1	PAOOO	
45−95	W360P1 W360P2	**	68175−1011	3	CONNECTOR, PLUG, BNC (56232) (spec dwg 1218811−201)	74868	2	PAOZZ	
45−96	W361	**	1218817−324	2	CABLE ASSEMBLY	56232	1	PAOOO	
45−97	W361P1 W361P2	**	68175−1011	3	CONNECTOR, PLUG, BNC (56232) (spec dwg 1218811−201)	74868	2	PAOZZ	
45−98	W365	* **	1219726−301	2	CABLE ASSEMBLY	56232	1	PAOOO	
	W365	* **	1219726−302	2	CABLE ASSEMBLY	56232	1	PAOOO	
45−99	W365P1	**	DAU−15SF0	3	CONNECTOR, RECEPTACLE, ELECTRICAL (56232) (spec dwg 1218767−202)	71468	1	PAOZZ	

NOTE * : SITE DEPENDENT

NOTE ** : NOT SHOWN

NOTE *** : REQUISITION HIGHEST REVISION LEVEL NSN MANAGED BY SOURCE OF SUPPLY (SOS) G13 or S9_

Section II. Maintenance Parts List

FIGURE AND INDEX NO.	REF DES	PART NUMBER	INDENT	DESCRIPTION	CAGE CODE	QTY PER ASSY	CODES	
							SMR	USABLE ON
45−100	W365P2 **	DAU−15PF0	3	CONNECTOR, ELECTRICAL, PLUG (56232) (spec dwg 1218768−202)	71468	1	PAOZZ	
		USABLE ON CODES A − LIMITED PRODUCTION B − FULL SCALE PRODUCTION C − FULL SCALE PRODUCTION WITH MICRO 5						
	NOTE * : SITE DEPENDENT NOTE ** : NOT SHOWN NOTE *** : REQUISITION HIGHEST REVISION LEVEL NSN MANAGED BY SOURCE OF SUPPLY (SOS) G13 or S9_							

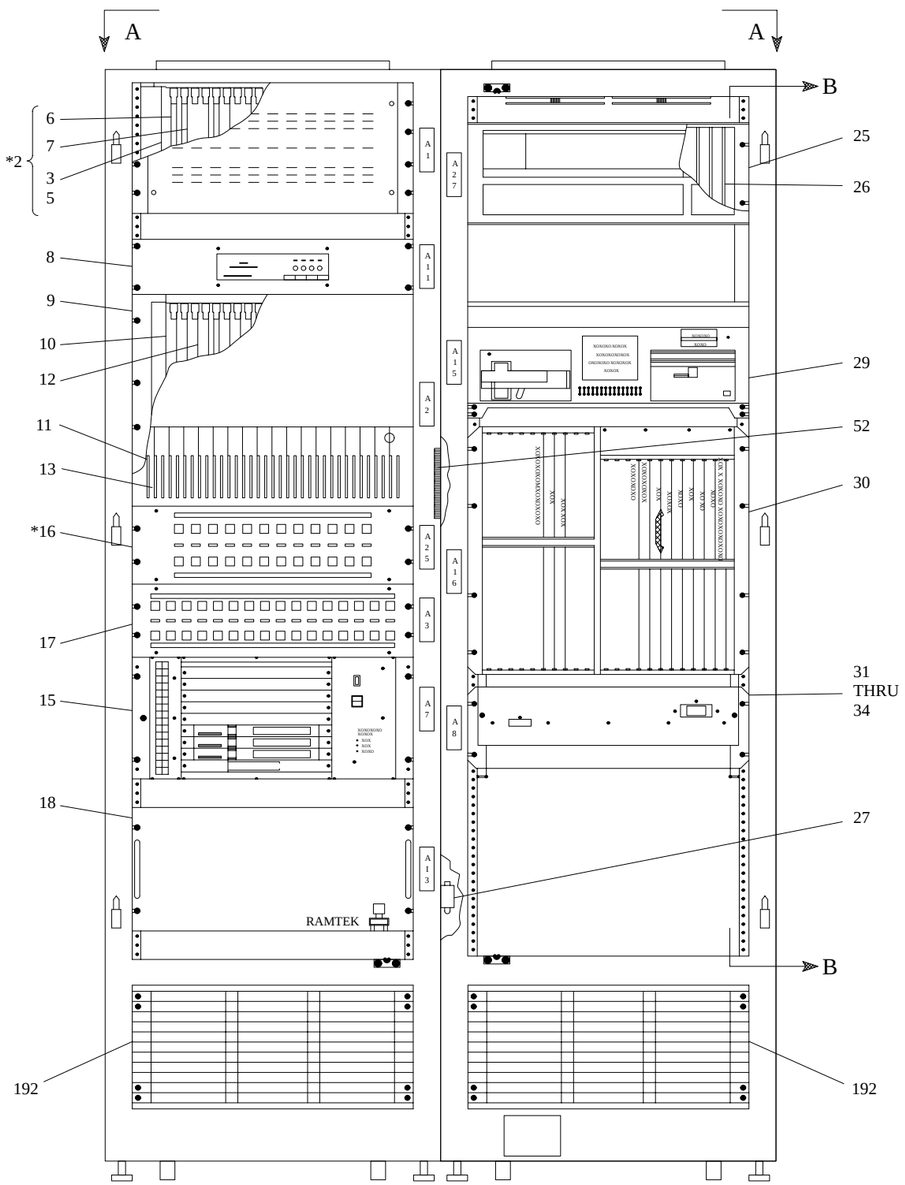

FRONT VIEW
(DOORS REMOVED FOR CLARITY)

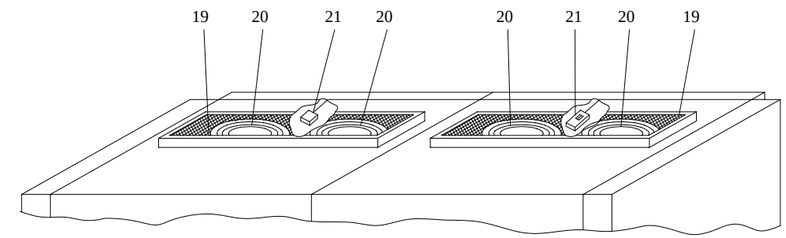

VIEW A−A

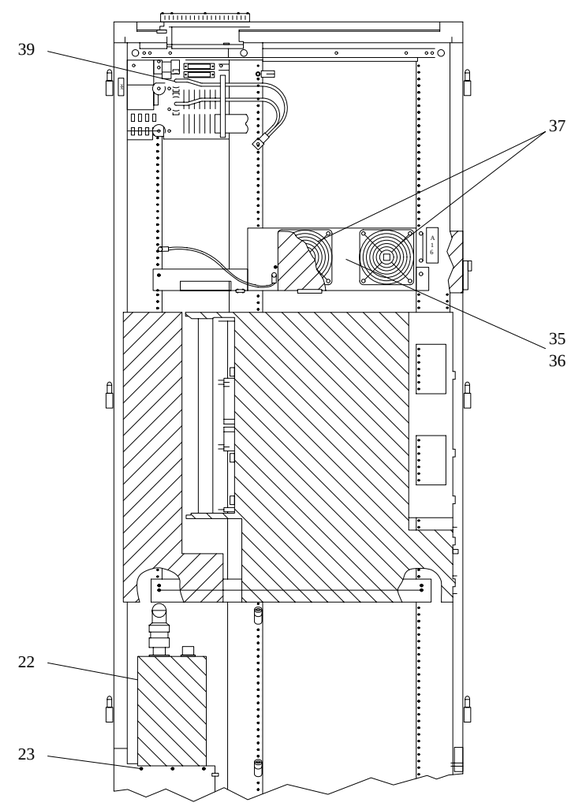

VIEW B−B

*** COLLOCATED PUPs USE CONVERTER (46−2) IN LIEU OF DEDICATED MODEMs (46−12) AND PANELS (46−14, 46−16)**

NX1203

FIGURE 46. PUP Data Processor, UD41 (Sheet 1 of 5)

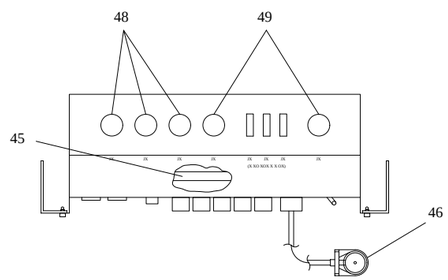

VIEW C−C

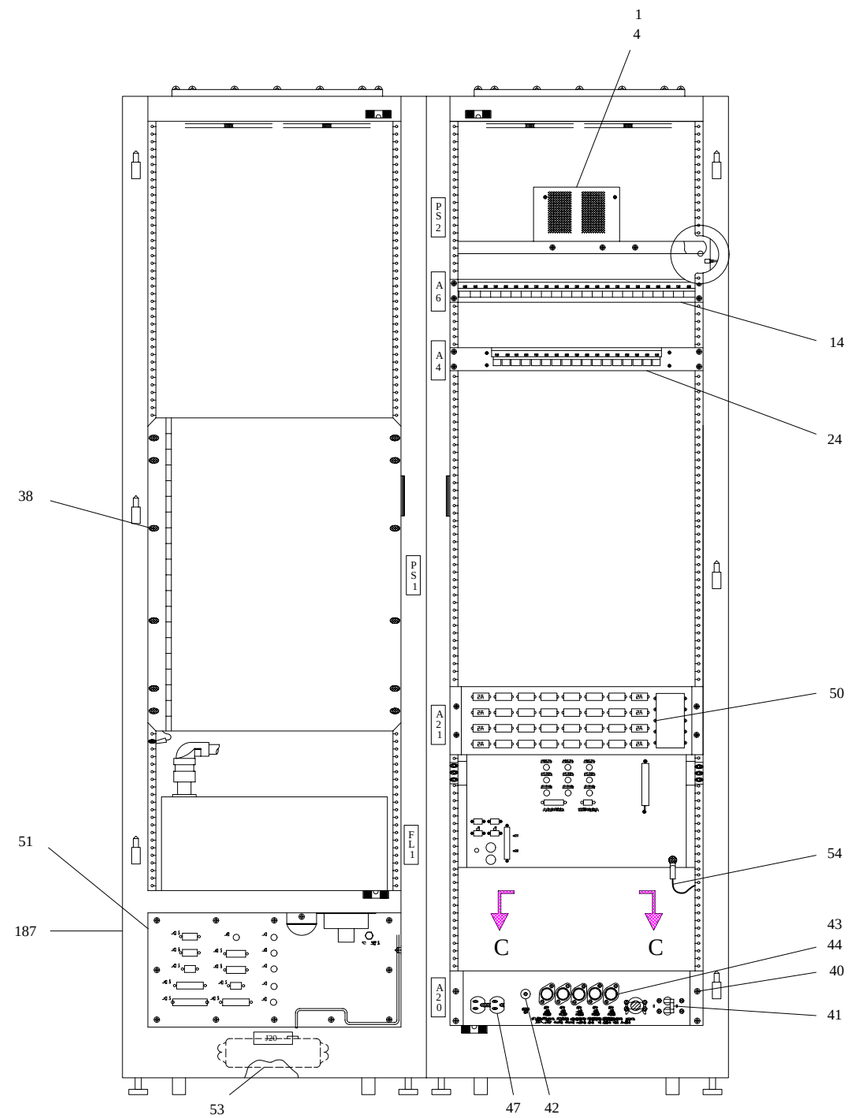

NX1204

REAR VIEW (DOORS REMOVED FOR CLARITY)
ALL CONFIGURATIONS

FIGURE 46. PUP Data Processor, UD41 (Sheet 2 of 5)

CABLE ASSEMBLIES (NOT SHOWN)

INDEX NO.	REF DES	FROM	TO	USABLE ON CODE
46−55	−	A16A20C−3 A16A20C−4 A16A20C−5	A21−01(P3)/A21−02(P2) A21−03(P3)/A21−04(P2) A21−05(P3)/A21−06(P2)	
46−56	−	A18	A20J9	
46−57	−	PS1	A20J5	
46−58	−	A15	A20J2	
46−59	−	*A22	A20J3	
46−60	−	*A23	A20J8	
46−61	−	A16AT1J1	A16A22J1	
46−62	−	PS1A1J7	A8J6	
46−64	−	PS1J2	A8J5/A16A3J5B	
46−65	−	PS1J6	A5J1	
46−66	−	PS1J5	A16AT1C−3	
46−67	−	*J13 (J2) *A21−08	A16A20C−2/PS1J7 A16A20C−2/PS1J7	
46−68	−	A5J16 A5J17	A21−09 J14	
46−71	−	A16A5C−3	A16J2	
46−72	−	A15	A16A17C−4	
46−74	−	A15 (GND)	GND	
46−75	**41W1	A1A2J2	J15	
46−78	41W2	A25J2	J16	
46−81	41W3	A3J2	J17	
46−84	41W4	A13B2	J4	
46−87	41W5	A13G2	J5	
46−90	41W6	A13R2	J6	
46−93	41W7	A13B1	J7	
46−96	41W8	A13G1	J8	
46−99	41W9	A13R1	J9	
46−102	*41W10	A13PRINTER	J10	
46−107	41W11	A13J1	J11	
46−112	41W12	A16A14A1C−B	J12	
46−116	41W15	A16A15	A13J7	
46−121	**41W26	A1A1J1	A1A2J1	

* SITE DEPENDENT

** SITE DEPENDENT − COLLOCATED PUP

*** SITE DEPENDENT − 300−FOOT WORKSTATION EXTENSION

FIGURE 46. PUP Data Processor, UD41 (Sheet 3 of 5)

CABLE ASSEMBLIES (NOT SHOWN)

INDEX NO.	REF DES	FROM	TO	USABLE ON CODE
46−124	41W29	A4TELCO	A3J1	
46−134	41W34	A13J5	J18	
46−139	41W35	J19	TB2	
46−140	41W36	B1	TB2	
46−143	41W37	B2	TB2	
46−146	41W38	B3	TB3	
46−149	41W39	B4	TB3	
46−152	***41W61	A21−08	A27J1/CH1	B
46−157	***41W62	A13J5	A27J2/CH2	B
46−162	***41W64	A27RJ−48T	J14	B
46−166	***41W65	A13PRINTER	A28−IN	B
46−170	***41W66	A28−OUT	J10	B
46−175	41W74	A6J1	A2B1	
46−176	41W75	A6J2	A2B2	
46−177	41W98	A7J1	A2DTEA1	B
46−177	41W99	A7J2	A2DTEA2	B
46−177	41W100	A7J3	A2DTEA3	B
46−178	41W107	A7J2	A2DTEA5	B
46−178	41W108	A7J3	A2DTEA5	
46−178	41W109	A7J4	A2DTEB5	
46−178	41W110	A7J5	A2DTEA6	B
46−178	41W111	A7J6	A2DTEB6	B
46−178	41W112	A7J4	A2DTEA5	B
46−178	41W113	A7J3	A2DTEB5	B
46−178	41W114	A7J4	A2DTEA6	B
46−178	41W115	A7J5	A2DTEB6	B
46−179	41W121	A2A5	A4J1	
46−180	41W122	A2B5	A4J2	B
46−181	*41W126	A1A1J1	A11V.36	B
46−184	−	TB2−1 (GND)	TB2−2/TB3−1/TB3−2	
46−185	−	TB2−1 (GND)	B1/B2 (GND)	
46−186	−	TB3−1 (GND)	B4/B3 (GND)	

* SITE DEPENDENT

** SITE DEPENDENT − COLLOCATED PUP

*** SITE DEPENDENT − 300−FOOT WORKSTATION EXTENSION

FIGURE 46. PUP Data Processor, UD41 (Sheet 4 of 5)

CABLE ASSEMBLIES (NOT SHOWN)

INDEX NO.	REF DES	FROM	TO	USABLE ON CODE
46−189	−	A7A1J1	A16A19J2	B
46−190	41W31	A5TEL	A4J1	

* SITE DEPENDENT

** SITE DEPENDENT − COLLOCATED PUP

*** SITE DEPENDENT − 300−FOOT WORKSTATION EXTENSION

FIGURE 46. PUP Data Processor, UD41 (Sheet 5 of 5)

FIGURE AND INDEX NO.	REF DES	PART NUMBER	INDENT	DESCRIPTION	CAGE CODE	QTY PER ASSY	CODES SMR	CODES USABLE ON
46−	41 *	1525326−XXX	1	PUP DATA PROCESSOR W/M5 MOD 1222977 (For NHA see FIGURE 45 on Page 2 − 354)	56232	REF	PDOOD	A
	41 *	1219745−XXX	1	PUP DATA PROCESSOR W/M5 MOD 1222978 (For NHA see FIGURE 45 on Page 2 − 354)	56232	REF	PDOOD	B
	41 *	1221825−XXX	1	PUP DATA PROCESSOR (For NHA see FIGURE 45 on Page 2 − 354)	56232	REF	PDOOD	B
46−1	41PS3 *	PS004	2	POWER SUPPLY, 115/230 VAC (56232) (spec dwg 1214505−202)	59951	1	PAOZZ	
46−2	41A1 *	RM004	2	RACK, CONVERTER ASSEMBLY (56232) (spec dwg 1214505−201)	59951	1	PAOZZ	
				(ATTACHING PARTS)				
		MS51958−63	2	SCREW	96906	8	PAOZZ	
		MS35338−138	2	WASHER	96906	8	PAOZZ	
		MS15795−808	2	WASHER	96906	8	PAOZZ	
				− − − − − − − − −				
46−3	41A1A3 *	100−1147−001	3	CARD RACK (56232) (spec dwg 1214505−203)	59951	1	PAOZZ	
46−4	41A1W1 *	650−0073−001	3	CABLE, POWER SUPPLY INPUT (56232) (spec dwg 1214505−204)	59951	1	PAOZZ	
46−5	41A1W2 *	100−0055−001	3	CABLE, CARD RACK INPUT (56232) (spec dwg 1214505−205)	59951	1	PAOZZ	
46−6	41A1A1 *	IC456−C	3	CONVERTER (56232) (spec dwg 1213823−201) (Includes hardware)	59951	1	PAOZZ	
46−7	41A1A2 *	ME101C	3	MODEM ELIMINATOR (56232) (spec dwg 1214506−201)	59951	1	PAOZZ	
46−8	41A11 *	3010CSP−073	2	MODEM, HIGH SPEED (56232) (spec dwg 1222324−201)	0PF60	1	PAODD	

NOTE * : SITE DEPENDENT

NOTE ** : NOT SHOWN

NOTE *** : REQUISITION HIGHEST REVISION LEVEL NSN MANAGED BY SOURCE OF SUPPLY (SOS) G13 OR S9_

FIGURE AND INDEX NO.	REF DES	PART NUMBER	INDENT	DESCRIPTION	CAGE CODE	QTY PER ASSY	CODES SMR	CODES USABLE ON
				(ATTACHING PARTS)				
		MS51958−63	2	SCREW	96906	4	PAOZZ	
		MS35338−138	2	WASHER	96906	4	PAOZZ	
		MS15795−808	2	WASHER	96906	4	PAOZZ	
				− − − − − − − − −				
46−9	41A2 *	80416/21201	2	9 SLOT BACKPLANE + RACK (WITH 26−PIN DTE CONN) (56232) (spec dwg 1219738−202)	0BF49	1	PAODD	B
		58741	3	BACKPLANE (56232) (spec dwg 1219738−213)	25420	1	PAODD	
	*	22368	2	9 SLOT BACKPLANE + RACK (WITH 25−PIN DTE CONN)	0BF49	1	PAODD	A
				(ATTACHING PARTS)				
		MS51958−63	2	SCREW	96906	6	PAOZZ	
		MS35338−138	2	WASHER	96906	6	PAOZZ	
		MS15795−808	2	WASHER	96906	6	PAOZZ	
				− − − − − − − − −				
46−10	41A2PS1 * **	80406	3	POWER SUPPLY (56232) (spec dwg 1219738−203)	0BF49	1	PAODD	
46−11	41A1B1 **	80405	3	FAN MODULE (56232) (spec dwg 1219738−206)	0BF49	1	PAOZZ	
46−12	41A2A1 THRU 41A2A3 *	21102	2	DATA MODEM, 14K, CARD NEST, SINGLE (0BF49) (ALT PN 40373) (56232) (spec dwg 1219739−207)	0BF49	AR	PAOLD	
	41A2A1 THRU 41A2A3 *	42703	2	DATA MODEM, 33K W/SDC, CARD NEST, SINGLE (56232) (spec dwg 1219739−210)	0BF49	AR	PAOLD	
46−13	41A2A4 41A2A5 *	21100	2	DATA MODEM, 14K, CARD NEST, DUAL (0BF49) (ALT PN 40372) (56232) (spec dwg 1219739−209)	0BF49	AR	PAOLD	
	41A2A4 41A2A5 *	42702	2	DATA MODEM, 33K W/SDC, CARD NEST, DUAL (56232) (spec dwg 1219739−214)	0BF49	AR	PAOLD	

NOTE * : SITE DEPENDENT

NOTE ** : NOT SHOWN

NOTE *** : REQUISITION HIGHEST REVISION LEVEL NSN MANAGED BY SOURCE OF SUPPLY (SOS) G13 OR S9_

FIGURE AND INDEX NO.	REF DES	PART NUMBER	INDENT	DESCRIPTION	CAGE CODE	QTY PER ASSY	CODES SMR	CODES USABLE ON
46−14	41A6 *	RJ45S−24−4	2	PANEL, ADAPTER, COMMUNICATIONS (56232) (spec dwg 1219734−201)	65752	1	PAOZZ	
				(ATTACHING PARTS)				
		MS51958−61	2	SCREW	96906	4	PAOZZ	
		MS35338−138	2	WASHER	96906	4	PAOZZ	
		MS15795−808	2	WASHER	96906	4	PAOZZ	
				− − − − − − − − −				
46−15	41A7 *	1222415−301	2	VME ASSEMBLY, PUP (For breakdown see FIGURE 47 on Page 2 − 389)	56232	1	PBDDD	
				(ATTACHING PARTS)				
		MS51958−63	2	SCREW	96906	4	PAOZZ	
		MS35338−138	2	WASHER	96906	4	PAOZZ	
		MS15795−808	2	WASHER	96906	4	PAOZZ	
				− − − − − − − − −				
46−16	41A25	MF−RJ11−12−4	2	TELEPHONE PATCH PANEL (56232) (spec dwg 1213826−201)	0YW95	1	PAOZZ	
				(ATTACHING PARTS)				
		MS51958−63	2	SCREW	96906	4	PAOZZ	
		MS35338−138	2	WASHER	96906	4	PAOZZ	
				− − − − − − − − −				
46−17	41A3	MF−RJ11−16−2	2	TELEPHONE PATCH PANEL (56232) (spec dwg 1213826−202)	65752	1	PAOLD	
				(ATTACHING PARTS)				
		MS51958−63	2	SCREW	96906	4	PAOZZ	
		MS35338−138	2	WASHER	96906	4	PAOZZ	
		MS15795−808	2	WASHER	96906	4	PAOZZ	
				− − − − − − − − −				
46−18	41A13	512384−07	2	GRAPHICS PROCESSOR ASSEMBLY (For breakdown see FIGURE 48 on Page 2 − 391)	55257	1	PBODD	

NOTE * : SITE DEPENDENT

NOTE ** : NOT SHOWN

NOTE *** : REQUISITION HIGHEST REVISION LEVEL NSN MANAGED BY SOURCE OF SUPPLY (SOS) G13 OR S9_

FIGURE AND INDEX NO.	REF DES	PART NUMBER	INDENT	DESCRIPTION	CAGE CODE	QTY PER ASSY	CODES SMR	CODES USABLE ON
46−19		60−02075	2	FILTER, EMI (56232) (spec dwg 1213832−201)	07700	2	PAOZZ	
46−20	41B1	028254	2	FAN, TUBEAXIAL, CIRCULAR FRAME (56232) (spec dwg 1213829−201)	5Y921	4	PAOZZ	
				(ATTACHING PARTS)				
		MS51957−32	2	SCREW	96906	16	PAOZZ	
		MS35338−136	2	WASHER	96906	24	PAOZZ	
		MS15795−805	2	WASHER	96906	16	PAOZZ	
		MS35649−264	2	NUT	96906	16	PAOZZ	
				− − − − − − − − −				
46−21	41TB2 41TB3	37TB2F	2	TERMINAL BOARD	81349	2	PAOZZ	
				(ATTACHING PARTS)				
		MS51957−32	2	SCREW	96906	8	PAOZZ	
		MS35338−136	2	WASHER	96906	8	PAOZZ	
		MS15795−805	2	WASHER	96906	12	PAOZZ	
		MS35649−264	2	NUT	96906	8	PAOZZ	
				− − − − − − − − −				
46−22	41FL1	FA60−2016	2	FILTER, BANDPASS (13619) (ALT PN RF13125) (56232) (spec dwg 1213644−201)	81831	1	PAOLD	
				(ATTACHING PARTS)				
		MS35650−304	2	NUT	96906	12	PAOZZ	
		MS35338−138	2	WASHER	96906	12	PAOZZ	
		MS15795−808	2	WASHER	96906	12	PAOZZ	
				− − − − − − − − −				
46−23	41FL1MS1	1213847−201	2	GASKET, SHIELDING, ELECTRONIC	56232	1	PAOZZ	
46−24	41A4 *	1213827	2	PANEL, ADAPTER, COMMUNICATION (56232) (spec dwg 1213827−201) (0YW95) (ALT PN 1213827)	65752	1	PAOZZ	

NOTE * : SITE DEPENDENT

NOTE ** : NOT SHOWN

NOTE *** : REQUISITION HIGHEST REVISION LEVEL NSN MANAGED BY SOURCE OF SUPPLY (SOS) G13 OR S9_

FIGURE AND INDEX NO.	REF DES	PART NUMBER	INDENT	DESCRIPTION	CAGE CODE	QTY PER ASSY	CODES SMR	CODES USABLE ON
				(ATTACHING PARTS)				
		MS51958−63	2	SCREW	96906	4	PAOZZ	
		MS35338−138	2	WASHER	96906	4	PAOZZ	
		MS15795−808	2	WASHER	96906	4	PAOZZ	
				− − − − − − − − −				
46−25	41A27 *	28425	2	NEST RACK W/POWER SUPPLY (56232) (spec dwg 1219733−201)	0BF49	1	PAODD	B
				(ATTACHING PARTS)				
		MS51958−63	2	SCREW	96906	4	PAOZZ	B
		MS35338−138	2	WASHER	96906	4	PAOZZ	B
		MS15795−808	2	WASHER	96906	4	PAOZZ	B
				− − − − − − − − −				
46−26	41A27A1 * THRU 41A27A3	28478	2	MODEM, LIMITED DISTANCE (56232) (spec dwg 1218745−202)	0BF49	3	PAOLD	B
46−27	41A28 * **	1042E+T	2	EXTENDER, PARALLEL LINE (56232) (spec dwg 1221208−201)	0NYK1	1	PAOZZ	B
				(ATTACHING PARTS)				
		MS51957−30	2	SCREW	96906	2	PAOZZ	B
		MS35338−136	2	WASHER	96906	2	PAOZZ	B
		MS15795−805	2	WASHER	96906	2	PAOZZ	B
				− − − − − − − − −				
	41A28PS1 *	AD−091A	2	ADAPTER, PS 120V, 60HZ TO 9VDC (56232) (spec dwg 1221208−202)	0NYK1	1	PAOZZ	B
46−28	* ** ***	92−631F00MXXRXX	2	M5/E5 PROCESSOR ASSEMBLY, PUP, CONCURRENT EQUIPMENT PARTS KIT	30331	1	AO	A
	* ** ***	92−617F00MXXRXX	2	M5/ES PROCESSOR ASSEMBLY, PUP, CONCURRENT EQUIPMENT PARTS KIT	30331	1	AO	B

NOTE * : SITE DEPENDENT

NOTE ** : NOT SHOWN

NOTE *** : REQUISITION HIGHEST REVISION LEVEL NSN MANAGED BY SOURCE OF SUPPLY (SOS) G13 OR S9_

FIGURE AND INDEX NO.	REF DES	PART NUMBER	INDENT	DESCRIPTION	CAGE CODE	QTY PER ASSY	CODES SMR	CODES USABLE ON
46−29	41A15 ***	92−390F02MXXRXX	3	SCSI ENCLOSURE ASSEMBLY (For breakdown see FIGURE 43 on Page 2 − 347)	30331	1	XC	
46−30	41A16 ***	96−617FXXMXXRXX	3	M5/ES CHASSIS ASSEMBLY, PUP (For breakdown see FIGURE 49 on Page 2 − 397)	30331	1	PDDOD	
				(ATTACHING PARTS)				
		MS51958−63	3	SCREW	96906	8	PAOZZ	
		MS35338−138	3	WASHER	96906	8	PAOZZ	
		MS15795−808	3	WASHER	96906	8	PAOZZ	
				− − − − − − − − −				
46−31	41A8 ***	93−549F00MXXRXX	3	FAN PANEL ASSEMBLY, LOWER	30331	1	XB	
				(ATTACHING PARTS)				
		MS51958−63	3	SCREW	96906	4	PAOZZ	
		MS35338−138	3	WASHER	96906	4	PAOZZ	
		MS15795−808	3	WASHER	96906	4	PAOZZ	
				− − − − − − − − −				
46−32	41A8A1	184−00016−00	4	FAN PAN (LOWER)	30331	1	PAODD	
46−33	41A8A1A1 ***	35−881F00MXXRXX	5	FAN SENSOR BOARD	30331	1	PAOLD	
46−34	41A8A1B1 THRU 41A8A1B4 ***	36−049F00MXXRXX	5	FAN ASSEMBLY	30331	4	PAOZZ	
46−35	41A18 * ***	93−626F00MXXRXX	3	FAN PANEL ASSEMBLY	30331	1	PAOOO	B
				(ATTACHING PARTS)				
		MS51958−63	3	SCREW	96906	2	PAOZZ	
		MS35338−138	3	WASHER	96906	2	PAOZZ	
		MS15795−808	3	WASHER	96906	2	PAOZZ	
		MS51957−31	3	SCREW	96906	2	PAOZZ	
		MS35338−136	3	WASHER	96906	2	PAOZZ	
		MS15795−805	3	WASHER	96906	2	PAOZZ	
				− − − − − − − − −				
46−36	41A18W1 ***	95−579F00MXXRXX	4	CABLE, FAN POWER	30331	1	PAOZZ	

NOTE * : SITE DEPENDENT

NOTE ** : NOT SHOWN

NOTE *** : REQUISITION HIGHEST REVISION LEVEL NSN MANAGED BY SOURCE OF SUPPLY (SOS) G13 OR S9_

FIGURE AND INDEX NO.	REF DES		PART NUMBER	INDENT	DESCRIPTION	CAGE CODE	QTY PER ASSY	CODES SMR	CODES USABLE ON
46−37	41A18B1 41A18B2	***	36−011F00MXXRXX	4	FAN, MUFFIN	30331	2	PAOZZ	
46−38	41PS1	***	93−AAYF00MXXRXX	3	SWINGOUT POWER SUBSYSTEM (For breakdown see FIGURE 21 on Page 2 − 251)	30331	1	PAODD	
					(ATTACHING PARTS)				
			MS51958−63	3	SCREW	96906	6	PAOZZ	
			MS35338−138	3	WASHER	96906	6	PAOZZ	
			MS15795−808	3	WASHER	96906	6	PAOZZ	
					− − − − − − − − −				
46−39	41A5	***	35−896F00MXXRXX	3	CIRCUIT CARD ASSEMBLY, CDS PATCH PANEL	30331	1	PAOLD	
					(ATTACHING PARTS)				
			MS51958−63	3	SCREW	96906	3	PAOZZ	
			MS35338−138	3	WASHER	96906	3	PAOZZ	
			MS15795−808	3	WASHER	96906	3	PAOZZ	
					− − − − − − − − −				
46−40	41A20	***	09−144F01MXXRXX	3	POWER DISTRIBUTION PANEL	30331	1	PAODD	
					(ATTACHING PARTS)				
			MS51958−63	3	SCREW	96906	4	PAOZZ	
			MS15795−808	3	WASHER	96906	4	PAOZZ	
			MS35338−138	3	WASHER	96906	4	PAOZZ	
					− − − − − − − − −				
46−41	41A20CB1/CB2	***	36−022F01MXXRXX	4	CIRCUIT BREAKER, 30A	30331	1	PAOZZ	
					(ATTACHING PARTS)				
		***	16−237F02MXXRXX	4	SCREW, PHILLIPS, NO. 6−32 X 1/4 IN. LG.	30331	4	PAOZZ	
		***	16−328F02MXXRXX	4	WASHER, INT TOOTH NO.6	30331	4	PAOZZ	
					− − − − − − − − −				
46−42	41A20CB3	***	36−038F01MXXRXX	4	CIRCUIT BREAKER, 5A (74193) (ALT PN KD1−5)	30331	1	PAOZZ	

NOTE * : SITE DEPENDENT

NOTE ** : NOT SHOWN

NOTE *** : REQUISITION HIGHEST REVISION LEVEL NSN MANAGED BY SOURCE OF SUPPLY (SOS) G13 OR S9_

FIGURE AND INDEX NO.	REF DES		PART NUMBER	INDENT	DESCRIPTION	CAGE CODE	QTY PER ASSY	CODES SMR	CODES USABLE ON
46−43	41A20F1 THRU 41A20F5		WF1814/01−005	4	FUSE, 15A, 300V (30331) (ALT PN 24−071F00MXXRXX)	81348	5	PAOZZ	
46−44	41A20XF1 THRU 41A20XF5		HPF−EE	4	FUSEHOLDER	71400	5	PAOZZ	
46−45	41A20LF1	***	24−103F00MXXRXX	4	LINE FILTER	30331	1	PAOZZ	
					(ATTACHING PARTS)				
		***	16−237F02MXXRXX	4	SCREW, PHILLIPS, NO. 6−32 X 1/4 IN. LG	30331	3	PAOZZ	
		***	16−328F02MXXRXX	4	WASHER, INT TOOTH NO.6	30331	3	PAOZZ	
					− − − − − − − − −				
46−46		***	26−249F00MXXRXX	4	PLUG, 30A	30331	1	PAOZZ	
46−47	41A20J6	***	26−064F00MXXRXX	4	RECEPTACLE, AC OUTLET	30331	1	PAOZZ	
46−48	41A20J1 THRU 41A20J3	***	26−347F01MXXRXX	4	RECEPTACLE, 3 WIRE, AC/DC, 125V, 15A	30331	3	PAOZZ	
46−49	41A20J4 THRU 41A20J6		WC596/168−1	4	RECEPTACLE, 3 WIRE, AC/DC, 250V, 15A	81348	2	PAOZZ	
46−50	41A21	***	14−127F00MXXRXX	3	CONVENIENCE PANEL	30331	1	XC	
					(ATTACHING PARTS)				
			MS51958−63	3	SCREW	96906	4	PAOZZ	
			MS35338−138	3	WASHER	96906	4	PAOZZ	
			MS15795−808	3	WASHER	96906	4	PAOZZ	
					− − − − − − − − −				
46−51			44−02633	3	GASKET, SHIELDING, ELECTRONIC (56232) (spec dwg 1213850−201)	07700	1	PAOZZ	
46−52	41J19		1217822−301	2	POWER STRIP ASSEMBLY	56232	1	PAOZZ	
46−53	41J20		1218755−301	2	POWER STRIP ASSEMBLY	56232	1	PAOZZ	
					(ATTACHING PARTS)				
			MS51958−63	2	SCREW	96906	2	PAOZZ	
			MS35338−138	2	WASHER	96906	2	PAOZZ	
			MS15795−808	2	WASHER	96906	2	PAOZZ	

NOTE * : SITE DEPENDENT

NOTE ** : NOT SHOWN

NOTE *** : REQUISITION HIGHEST REVISION LEVEL NSN MANAGED BY SOURCE OF SUPPLY (SOS) G13 OR S9_

FIGURE AND INDEX NO.	REF DES	PART NUMBER	INDENT	DESCRIPTION	CAGE CODE	QTY PER ASSY	CODES SMR	CODES USABLE ON
		MS35650−304	2	NUT − − − − − − − − −	96906	2	PAOZZ	
46−54	41MS3	1217074−315	2	GROUND STRAP	56232	1	PAOZZ	
46−55	** ***	17−852F02MXXRXX	2	CABLE ASSEMBLY	30331	3	PAOZZ	
46−56	** ***	95−579F00MXXRXX	2	CABLE, FAN POWER	30331	1	PAOZZ	
46−57	** ***	95−791F00MXXRXX	2	CABLE ASSEMBLY	30331	1	PAOZZ	
46−58	** ***	17−783F00MXXRXX	2	CABLE ASSEMBLY	30331	1	PAOZZ	
46−59	* ** ***	17−783F00MXXRXX	2	CABLE ASSEMBLY	30331	1	PAOZZ	
46−60	* ** ***	95−579F00MXXRXX	2	CABLE ASSEMBLY	30331	1	PAOZZ	
46−61	** ***	17−688F01MXXRXX	2	CABLE, DUAL COAXIAL	30331	1	PAOZZ	
46−62	** ***	17−704F01MXXRXX	2	CABLE, FAN POWER	30331	1	PAOOO	
46−63	**	350779−1	3	CONNECTOR	00779	2	PAOZZ	
46−64	** ***	17−705F00MXXRXX	2	CABLE ASSEMBLY	30331	1	PAOOO	
46−65	** ***	17−706F05MXXRXX	2	CABLE ASSEMBLY	30331	1	PAOZZ	
46−66	** ***	17−709F02MXXRXX	2	CABLE ASSEMBLY	30331	1	PAOZZ	
46−67	**	375−06026−00	2	CABLE ASSEMBLY	30331	1	PAOZZ	
46−68	** ***	95−636F00MXXRXX	2	CABLE ASSEMBLY	30331	2	PAOOO	
46−69	**	747306−3	3	CONNECTOR (30331) (source ctrl dwg 26−386F01)	00779	1	PAOZZ	
46−70	**	747303−3	3	CONNECTOR (30331) (source ctrl dwg 26−421F01)	00779	1	PAOZZ	
46−71	** ***	17−989F07MXXRXX	2	CABLE ASSEMBLY	30331	1	PAOZZ	

NOTE * : SITE DEPENDENT

NOTE ** : NOT SHOWN

NOTE *** : REQUISITION HIGHEST REVISION LEVEL NSN MANAGED BY SOURCE OF SUPPLY (SOS) G13 OR S9_

FIGURE AND INDEX NO.	REF DES		PART NUMBER	INDENT	DESCRIPTION	CAGE CODE	QTY PER ASSY	CODES SMR	CODES USABLE ON
46−72	41W145	** ***	95−628F02MXXRXX	2	CABLE ASSEMBLY	30331	1	PAOOO	
46−73	41W145P1	** ***	26−351F02MXXRXX	3	CONNECTOR, PLUG	30331	4	PAOZZ	
46−74		** ***	17−835F00MXXRXX	2	CABLE ASSEMBLY	30331	1	PAOZZ	
46−75	41W1	* **	1214751−301	2	CABLE ASSEMBLY	56232	1	PAODD	
46−76	41W1P1	**	DCU−37PF0	3	CONNECTOR, ELECTRICAL, PLUG (56232) (spec dwg 1218768−204)	71468	1	PAOZZ	
46−77	41W1J15	**	DCU−37SF0	3	CONNECTOR, D−SUB, RECEPTACLE (56232) (spec dwg 1218767−204)	71468	1	PAOZZ	
46−78	41W2	* **	1214745−301	2	CABLE ASSEMBLY	56232	1	PAOOO	
46−79	41W2P1	**	157−82500−3	3	CONNECTOR, RECEPTACLE, (56232) (spec dwg 1218769−201)	02660	1	PAOZZ	
46−80	41W2J16	**	DDU−50PF0	3	CONNECTOR, PLUG, ELECTRONIC (56232) (spec dwg 1218768−205)	71468	1	PAOZZ	
46−81	41W3	* **	1214745−302	2	CABLE ASSEMBLY	56232	1	PAOOO	
46−82	41W3P1	**	157−82500−3	3	CONNECTOR, RECEPTACLE, (56232) (spec dwg 1218769−201)	02660	1	PAOZZ	
46−83	41W3J17	**	DDU−50PF0	3	CONNECTOR, PLUG ELECTRONIC (56232) (spec dwg 1218768−205)	71468	1	PAOZZ	
46−84	41W4	**	1214651−301	2	CABLE ASSEMBLY	56232	1	PAOOO	
46−85	41W4P1	**	68175−1011	3	CONNECTOR, PLUG, BNC (56232) (spec dwg 1218811−201)	74868	1	PAOZZ	
46−86	41W4J4	**	31−343−1002	3	CONNECTOR, BNC BULKHEAD (56232) (spec dwg 1219668−201)	74868	1	PAOZZ	
46−87	41W5	**	1214651−302	2	CABLE ASSEMBLY	56232	1	PAOOO	

NOTE * : SITE DEPENDENT

NOTE ** : NOT SHOWN

NOTE *** : REQUISITION HIGHEST REVISION LEVEL NSN MANAGED BY SOURCE OF SUPPLY (SOS) G13 OR S9_

FIGURE AND INDEX NO.	REF DES		PART NUMBER	INDENT	DESCRIPTION	CAGE CODE	QTY PER ASSY	CODES SMR	CODES USABLE ON
46−88	41W5P1	**	68175−1011	3	CONNECTOR, PLUG, BNC (56232) (spec dwg 1218811−201)	74868	1	PAOZZ	
46−89	41W5J5	**	31−343−1002	3	CONNECTOR, BNC BULKHEAD (56232) (spec dwg 1219668−201)	74868	1	PAOZZ	
46−90	41W6	**	1214651−303	2	CABLE ASSEMBLY	56232	1	PAOOO	
46−91	41W6P1	**	68175−1011	3	CONNECTOR, PLUG (56232) (spec dwg 1218811−201)	74868	1	PAOZZ	
46−92	41W6P2	**	31−343−1002	3	CONNECTOR, BNC BULKHEAD (56232) (spec dwg 1219668−201)	74868	1	PAOZZ	
46−93	41W7	**	1214651−304	2	CABLE ASSEMBLY	56232	1	PAOOO	
46−94	41W7P1	**	68175−1011	3	CONNECTOR, PLUG (56232) (spec dwg 1218811−201)	74868	1	PAOZZ	
46−95	41W7P2	**	31−343−1002	3	CONNECTOR, BNC BULKHEAD (56232) (spec dwg 1219668−201)	74868	1	PAOZZ	
46−96	41W8	**	1214651−305	2	CABLE ASSEMBLY	56232	1	PAOOO	
46−97	41W8P1	**	68175−1011	3	CONNECTOR, PLUG (56232) (spec dwg 1218811−201)	74868	1	PAOZZ	
46−98	41W8P2	**	31−343−1002	3	CONNECTOR, BNC BULKHEAD (56232) (spec dwg 1219668−201)	74868	1	PAOZZ	
46−99	41W9	**	1214651−306	2	CABLE ASSEMBLY	56232	1	PAOOO	
46−100	41W9P1	**	68175−1011	3	CONNECTOR, PLUG (56232) (spec dwg 1218811−201)	74868	1	PAOZZ	
46−101	41W9P2	**	31−343−1002	3	CONNECTOR, BNC BULKHEAD (56232) (spec dwg 1219668−201)	74868	1	PAOZZ	
46−102	41W10	**	1214652−301	2	CABLE ASSEMBLY	56232	1	PAOOO	
46−103	41W10P1	**	DBU−25PF0	3	CONNECTOR, RECEPTACLE, ELECTRICAL (56232) (spec dwg 1218768−203)	71468	1	PAOZZ	
46−104	41W10P2	**	DBU−25SF0	3	CONNECTOR, RECEPTACLE, ELECTRICAL (56232) (spec dwg 1218767−203)	71468	1	PAOZZ	

NOTE * : SITE DEPENDENT

NOTE ** : NOT SHOWN

NOTE *** : REQUISITION HIGHEST REVISION LEVEL NSN MANAGED BY SOURCE OF SUPPLY (SOS) G13 OR S9_

FIGURE AND INDEX NO.	REF DES		PART NUMBER	INDENT	DESCRIPTION	CAGE CODE	QTY PER ASSY	CODES SMR	CODES USABLE ON
46−105		**	17−1657−25	3	BACKSHELL, D−SUB, RFI/EMI (38250) (ALT PN C88000203) (56232) (spec dwg 1218764−203)	02660	1	PAOZZ	
46−106		**	C88124040	3	BACKSHELL, D−SUB, RFI/EMI (56232) (spec dwg 1218779−202)	38250	1	PAOZZ	
46−107	41W11	**	1214653−301	2	CABLE ASSEMBLY	56232	1	PAOOO	
46−108	41W11P1	**	DEU−9PF0	3	CONNECTOR, RECEPTACLE, ELECTRICAL (56232) (spec dwg 1218768−201)	71468	1	PAOZZ	
46−109	41W11P2	**	DEU−9SF0	3	CONNECTOR, RECEPTACLE, ELECTRICAL (56232) (spec dwg 1218767−201)	71468	1	PAOZZ	
46−110		**	17−1657−09	3	BACKSHELL, D−SUB, RFI/EMI (38250) (ALT PN C88000218) (56232) (spec dwg 1218764−201)	02660	1	PAOZZ	
46−111		**	C88104040	3	BACKSHELL, D−SUB, RFI/EMI (56232) (spec dwg 1218779−201)	38250	1	PAOZZ	
46−112	41W12	* **	1214658−XXX	2	CABLE ASSEMBLY	56232	1	PAOOO	
46−113	41W12P1	**	DEU−9SF0	3	CONNECTOR, RECEPTACLE, ELECTRICAL (56232) (spec dwg 1218767−201)	71468	1	PAOZZ	
46−114	41W12P2	**	3−87456−6	3	CONNECTOR	02660	1	PAOZZ	
46−115		**	C88104040	3	BACKSHELL, D−SUB, RFI/EMI (56232) (spec dwg 1218779−201)	38250	1	PAOZZ	
46−116	41W15	**	1214656−XXX	2	CABLE ASSEMBLY	56232	1	PAOOO	
46−117	41W15P1	**	65057−007	3	CONNECTOR (56232) (spec dwg 1213943−201)	22526	1	PAOZZ	
46−118	41W15P2	**	DDU−50PF0	3	CONNECTOR, RECEPTACLE, ELECTRICAL (56232) (spec dwg 1218768−205)	71468	1	PAOZZ	
46−119		**	17−1657−50	3	BACKSHELL, D−SUB, RFI/EMI (38250) (ALT PN C88000208) (56232) (spec dwg 1218764−205)	02660	1	PAOZZ	

NOTE * : SITE DEPENDENT

NOTE ** : NOT SHOWN

NOTE *** : REQUISITION HIGHEST REVISION LEVEL NSN MANAGED BY SOURCE OF SUPPLY (SOS) G13 OR S9_

FIGURE AND INDEX NO.	REF DES		PART NUMBER	INDENT	DESCRIPTION	CAGE CODE	QTY PER ASSY	CODES SMR	CODES USABLE ON
46−120		**	47712	3	CONTACT, SOCKET, CRIMP REMOVABLE (56232) (spec dwg 1217053−201)	22526	50	PAOZZ	
46−121	41W26	**	1214654−301	2	CABLE ASSEMBLY	56232	1	PAOOO	
46−122	41W26P1 41W26P2	**	DCU−37PF0	3	CONNECTOR, RECEPTACLE, ELECTRICAL (56232) (spec dwg 1218768−204)	71468	2	PAOZZ	
46−123		**	17−1657−37	3	BACKSHELL, D−SUB, RFI/EMI (38250) (ALT PN C88000206) (56232) (spec dwg 1218764−204)	02660	2	PAOZZ	
46−124	41W29	* **	1214745−301	2	CABLE ASSEMBLY	56232	1	PAOOO	
	41W29	* **	1214745−302	2	CABLE ASSEMBLY	56232	1	PAOOO	
46−125	41W29P1	**	157−82500−3	3	CONNECTOR, TELCO (56232) (spec dwg 1218769−201)	02660	1	PAOZZ	
46−126	41W29P2	**	DDU−50PF0	3	CONNECTOR, RECEPTACLE, ELECTRICAL (56232) (spec dwg 1218768−205)	71468	1	PAOZZ	
46−127		**	C88144040	3	BACKSHELL, D−SUB, RFI/EMI (56232) (spec dwg 1218779−204)	38250	1	PAOZZ	
46−128	41W29	* **	1214745−303	2	CABLE ASSEMBLY	56232	1	PAOOO	
46−129	41W29P1	**	157−12500−14(441)	3	CONNECTOR, TELCO (56232) (spec dwg 1218774−201)	02660	1	PAOZZ	
46−130	41W29P2	**	157−72500−3	3	CONNECTOR, TELCO (56232) (spec dwg 1218770−201)	02660	1	PAOZZ	
46−131		**	157−1869−501	3	HOOD KIT, EMI SHIELD (56232) (spec dwg 1218773−201)	02660	1	PAOZZ	
46−132	41W29	**	1214745−304 1214745−305 1214745−306 1214745−307	2	CABLE ASSEMBLY	56232	1	PAOOO	

NOTE * : SITE DEPENDENT

NOTE ** : NOT SHOWN

NOTE *** : REQUISITION HIGHEST REVISION LEVEL NSN MANAGED BY SOURCE OF SUPPLY (SOS) G13 OR S9_

FIGURE AND INDEX NO.	REF DES	PART NUMBER	INDENT	DESCRIPTION	CAGE CODE	QTY PER ASSY	CODES SMR	CODES USABLE ON
46−133	41W29P1 ** 41W29P2	157−72500−3	3	CONNECTOR, TELCO (56232) (spec dwg 1218770−201)	02660	2	PAOZZ	
46−134	41W34 * **	1214849−301	2	CABLE ASSEMBLY	56232	1	PAOOO	
46−135	41W34P1 **	DEU−9PF0	3	CONNECTOR, RECEPTACLE, ELECTRICAL (56232) (spec dwg 1218768−201)	71468	1	PAOZZ	
46−136	**	17−1657−09	3	BACKSHELL, D−SUB, RFI/EMI (38250) (ALT PN C88000218) (56232) (spec dwg 1218764−201)	02660	1	PAOZZ	
46−137	41W34J18 **	DBU−25SF0	3	CONNECTOR, RECEPTACLE, ELECTRICAL (56232) (spec dwg 1218767−203)	71468	1	PAOZZ	
46−138	**	C88124040	3	BACKSHELL, D−SUB, RFI/EMI (56232) (spec dwg 1218779−202)	38250	1	PAOZZ	
46−139	41W35 **	1214880−301	2	CABLE ASSEMBLY	56232	1	PAOOO	
46−140	41W36 **	1213830−301	2	CABLE ASSEMBLY	56232	1	PAOOO	
46−141	**	428056	3	CORD ASSEMBLY, ELECTRICAL, POWER (56232) (spec dwg 1214913−201)	5Y921	1	PAOZZ	
46−142	**	MS25036−106	3	TERMINAL LUG	96906	2	PAOZZ	
46−143	41W37 **	1213830−302	2	CABLE ASSEMBLY	56232	1	PAOOO	
46−144	**	428056	3	CORD ASSEMBLY, ELECTRICAL, POWER (56232) (spec dwg 1214913−201)	5Y921	1	PAOZZ	
46−145	**	MS25036−106	3	TERMINAL LUG	96906	2	PAOZZ	
46−146	41W38 **	1213830−303	2	CABLE ASSEMBLY	56232	1	PAOOO	
46−147	**	428056	3	CORD ASSEMBLY, ELECTRICAL, POWER (56232) (spec dwg 1214913−201)	5Y921	1	PAOZZ	
46−148	**	MS25036−106	3	TERMINAL LUG	96906	2	PAOZZ	
46−149	41W39 **	1213830−304	2	CABLE ASSEMBLY	56232	1	PAOOO	

NOTE * : SITE DEPENDENT

NOTE ** : NOT SHOWN

NOTE *** : REQUISITION HIGHEST REVISION LEVEL NSN MANAGED BY SOURCE OF SUPPLY (SOS) G13 OR S9_

FIGURE AND INDEX NO.	REF DES		PART NUMBER	INDENT	DESCRIPTION	CAGE CODE	QTY PER ASSY	CODES SMR	CODES USABLE ON
46−150		**	428056	3	CORD ASSEMBLY, ELECTRICAL, POWER (56232) (spec dwg 1214913−201)	5Y921	1	PAOZZ	
46−151		**	MS25036−106	3	TERMINAL LUG	96906	2	PAOZZ	
46−152	41W61	* **	1219730−301	2	CABLE ASSEMBLY	56232	1	PAOOO	
46−153	41W61P1	**	DAU−15SF0	3	CONNECTOR, RECEPTACLE, ELECTRICAL (56232) (spec dwg 1218767−202)	71468	1	PAOZZ	
46−154		**	17−1657−15	3	BACKSHELL, D−SUB, RFI/EMI (38250) (ALT PN C88000207) (56232) (spec dwg 1218764−202)	02660	1	PAOZZ	
46−155	41W61P2	**	DBU−25PF0	3	CONNECTOR, RECEPTACLE, ELECTRICAL (56232) (spec dwg 1218768−203)	71468	1	PAOZZ	
46−156		**	17−1657−25	3	BACKSHELL, D−SUB, RFI/EMI (38250) (ALT PN C88000203) (56232) (spec dwg 1218764−203)	02660	1	PAOZZ	
46−157	41W62	**	1219729−301	2	CABLE ASSEMBLY	56232	1	PAOOO	
46−158	41W62P1	**	DEU−9PF0	3	CONNECTOR, RECEPTACLE, ELECTRICAL (56232) (spec dwg 1218768−201)	71468	1	PAOZZ	
46−159		**	17−1657−09	3	BACKSHELL, D−SUB, RFI/EMI (38250) (ALT PN C88000218) (56232) (spec dwg 1218764−201)	02660	1	PAOZZ	
46−160	41W62P2	**	DBU−25PF0	3	CONNECTOR, RECEPTACLE, ELECTRICAL (56232) (spec dwg 1218768−203)	71468	1	PAOZZ	
46−161		**	17−1657−25	3	BACKSHELL, D−SUB, RFI/EMI (38250) (ALT PN C88000203) (56232) (spec dwg 1218764−203)	02660	1	PAOZZ	
46−162	41W64	* **	1219728−301	2	CABLE ASSEMBLY	56232	1	PAOOO	
46−163	41W64P1		157−32500	3	CONNECTOR (56232) (spec dwg 1218771−202)	02660	1	PAOZZ	

NOTE * : SITE DEPENDENT

NOTE ** : NOT SHOWN

NOTE *** : REQUISITION HIGHEST REVISION LEVEL NSN MANAGED BY SOURCE OF SUPPLY (SOS) G13 OR S9_

FIGURE AND INDEX NO.	REF DES		PART NUMBER	INDENT	DESCRIPTION	CAGE CODE	QTY PER ASSY	CODES SMR	CODES USABLE ON
46−164	41W64J14	**	DAU−15PF0	3	CONNECTOR, RECEPTACLE, ELECTRICAL (56232) (spec dwg 1218768−202)	71468	1	PAOZZ	
46−165		**	C88611000	3	BACKSHELL, RFI/EMI (56232) (spec dwg 1218770−201)	38250	1	PAOZZ	
46−166	41W65	* **	1219731−301	2	CABLE ASSEMBLY	56232	1	PAOOO	
46−167	41W65P1	**	DBU−25PF0	3	CONNECTOR, RECEPTACLE, ELECTRICAL (56232) (spec dwg 1218768−203)	71468	1	PAOZZ	
46−168	41W65P2	**	DBU−25SF0	3	CONNECTOR, RECEPTACLE, ELECTRICAL (56232) (spec dwg 1218767−203)	71468	1	PAOZZ	
46−169		**	17−1657−25	3	BACKSHELL, D−SUB, RFI−EMI (38250) (ALT PN C88000203) (56232) (spec dwg 1218764−203)	02660	1	PAOZZ	
46−170	41W66	**	1214652−302	2	CABLE ASSEMBLY	56232	1	PAOOO	
46−171	41W10P1	**	DBU−25PF0	3	CONNECTOR, RECEPTACLE, ELECTRICAL (56232) (spec dwg 1218768−203)	71468	1	PAOZZ	
46−172	41W10P2	**	DBU−25SF0	3	CONNECTOR, RECEPTACLE, ELECTRICAL (56232) (spec dwg 1218767−203)	71468	1	PAOZZ	
46−173		**	17−1657−25	3	BACKSHELL, D−SUB, RFI/EMI (38250) (ALT PN C88000203) (56232) (spec dwg 1218764−203)	02660	1	PAOZZ	
46−174		**	C88124040	3	BACKSHELL, D−SUB, RFI/EMI (56232) (spec dwg 1218779−202)	38250	1	PAOZZ	
46−175	41W74	**	55729−06	2	CABLE ASSEMBLY	25420	1	PAOOO	
46−176	41W75	**	55729−06	2	CABLE ASSEMBLY	25420	1	PAOOO	
46−177	41W98 THRU 41W100	* **	26975	2	CABLE ASSEMBLY (56232) (spec dwg 1219739−204)	0BF49	1	PAOZZ	B
46−178	41W107 THRU 41W115	* **	26975	2	CABLE ASSEMBLY (56232) (spec dwg 1219739−204)	0BF49	1	PAOZZ	
46−179	41W121	**	55729−06	2	CABLE ASSEMBLY	25420	1	PAOOO	

NOTE * : SITE DEPENDENT

NOTE ** : NOT SHOWN

NOTE *** : REQUISITION HIGHEST REVISION LEVEL NSN MANAGED BY SOURCE OF SUPPLY (SOS) G13 OR S9_

FIGURE AND INDEX NO.	REF DES		PART NUMBER	INDENT	DESCRIPTION	CAGE CODE	QTY PER ASSY	CODES SMR	CODES USABLE ON
46−180	41W122	**	55729−06	2	CABLE ASSEMBLY	25420	1	PAOOO	
46−181	41W126	* **	1222325−301	2	CABLE ASSEMBLY	56232	1	PAOOO	
46−182	41W126P1 41W126P2	**	DCU−37PF0	3	CONNECTOR, RECEPTACLE, ELECTRICAL (56232) (spec dwg 1218768−204)	71468	2	PAOZZ	
46−183		**	17−1657−37	3	BACKSHELL, D−SUB, RFI/EMI (38250) (ALT PN C88000206) (56232) (spec dwg 1218764−204)	02660	2	PAOZZ	
46−184		**	1214794−301	2	WIRING HARNESS	56232	1	PAOOO	
46−185		**	1217081−302	2	HARNESS ASSEMBLY, BLOWER GROUNDING	56232	1	PAOOO	
46−186			1217081−303	2	HARNESS ASSEMBLY, BLOWER GROUNDING	56232	1	PAOOO	
46−187	41Z1	**	26−40755	2	CABINET, ELECTRICAL EQUIPMENT (56232) (spec dwg 1213452−201)	19178	1	XB	
46−188	41Z1MP1	**	1030−20220−1026	3	RFI, SHIELDING, DOOR (Order shielding per foot)	0R2V9	AR	PCOZZ	
46−189		**	320226	2	CABLE ASSEMBLY, INTERCONNECTING, VCI−V TO VCI−C (56232) (spec dwg 1222346−204)	65994	1	PAOOO	
46−190	41W31	**	1213893−303	2	CABLE ASSEMBLY	56232	1	PAOOO	A
46−191		**	COHP−150	2	ARRESTER, ELECTRICAL SURGE PROTECTOR (56232) (spec dwg 1222345−201)	0HHK2	6	PAOZZ	
46−192	41MP4		S1006−20	2	FILTER ELEMENT, AIR	03522	2	PAOZZ	

USABLE ON CODES

A − LIMITED PRODUCTION WITH MICRO 5

B − FULL SCALE PRODUCTION WITH MICRO 5

NOTE * : SITE DEPENDENT

NOTE ** : NOT SHOWN

NOTE *** : REQUISITION HIGHEST REVISION LEVEL NSN MANAGED BY SOURCE OF SUPPLY (SOS) G13 OR S9_

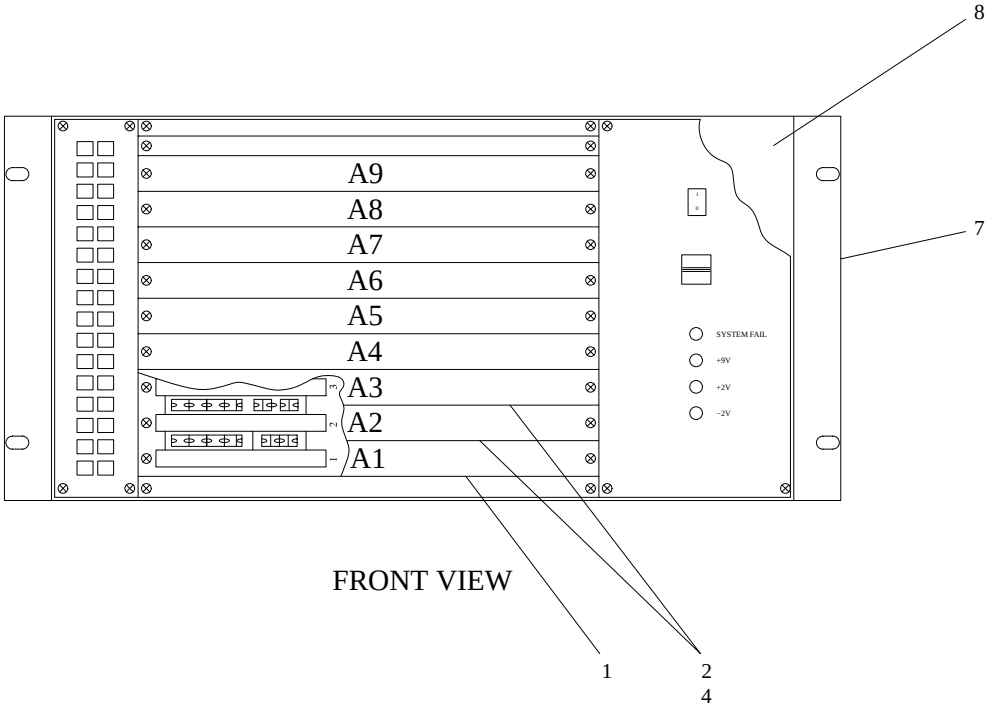

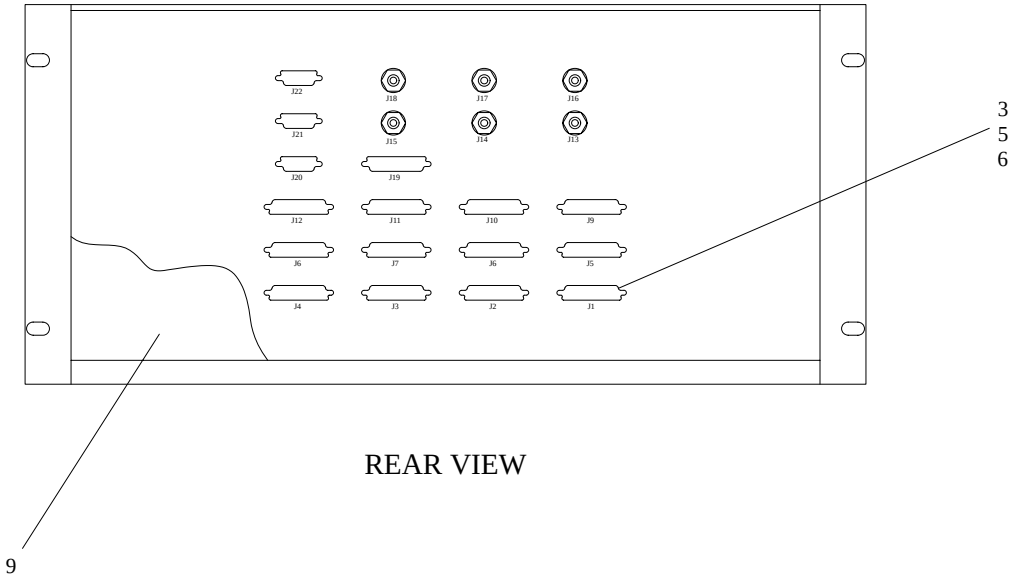

NX1205

FIGURE 47. PUP VME Assembly, UD41A7

FIGURE AND INDEX NO.	REF DES	PART NUMBER	INDENT	DESCRIPTION	CAGE CODE	QTY PER ASSY	CODES SMR	CODES USABLE ON
47−	41A7 *	1222415−301	1	VME ASSEMBLY	56232	REF	PBDDD	
47−1	41A7A1	224001	2	MODULE, VCI−V (56232) (spec dwg 1222346−203)	65994	1	PAOLD	
47−2	41A7A2 * 41A7A3	FV5310MG03	2	MODULE, NARROWBAND (56232) (spec dwg 1222421−204)	56776	2	PAOLD	
47−3	41A7A2W1 *	1222423−302	2	CABLE ASSEMBLY, NARROW BAND INTERFACE	56232	2	PAOOO	
47−4	*	3448−6964	3	CONNECTOR, IDC TYPE, FEMALE (56232) (spec dwg 1223117−202)	53387	1	PAOZZ	
47−5	*	745530−3	3	CONNECTOR (56232) (spec dwg 1223233−201)	00779	4	PAOZZ	
47−6		M24308/26−1	3	CONNECTOR JACKSCREW	81349	16	PAOZZ	
47−7	41A7A4	12V−519−R09J12MP25	2	VME CHASSIS ASSEMBLY (56232) (spec dwg 1222420−203)	76096	1	PAODD	
47−8	41A7B1 41A7B2	3610NL04WB40−D00	3	FAN ASSEMBLY, PUP VME CHASSIS (56232) (spec dwg 1222418−203)	0D1M6	2	PAOZZ	
47−9	41A7PS1	MTC−353−0512FP	3	POWER SUPPLY, PUP VME CHASSIS	34337	1	PAOLD	
	NOTE * :	SITE DEPENDENT						

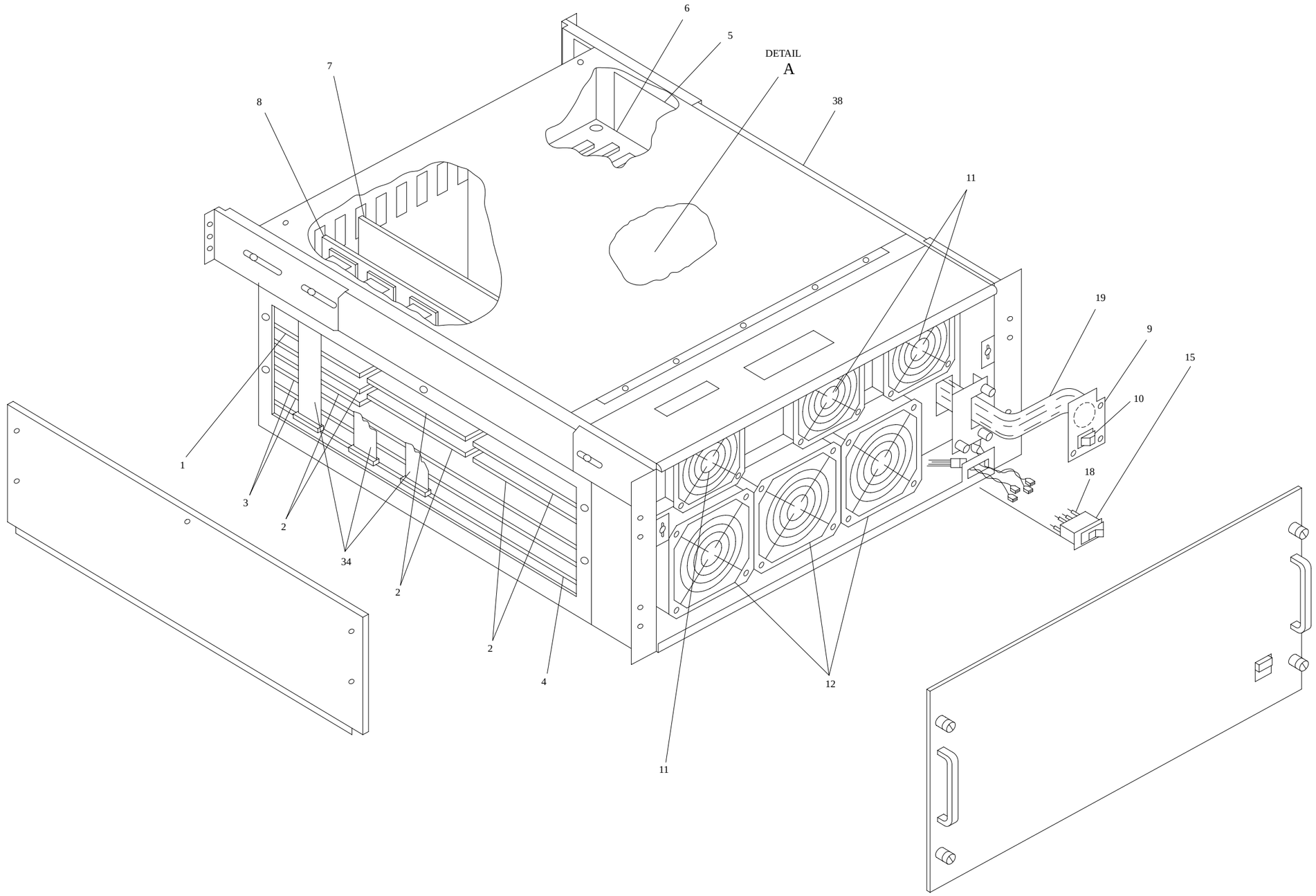

NX1206

FIGURE 48. Graphics Processor Assembly, UD41A13 (Sheet 1 of 2)

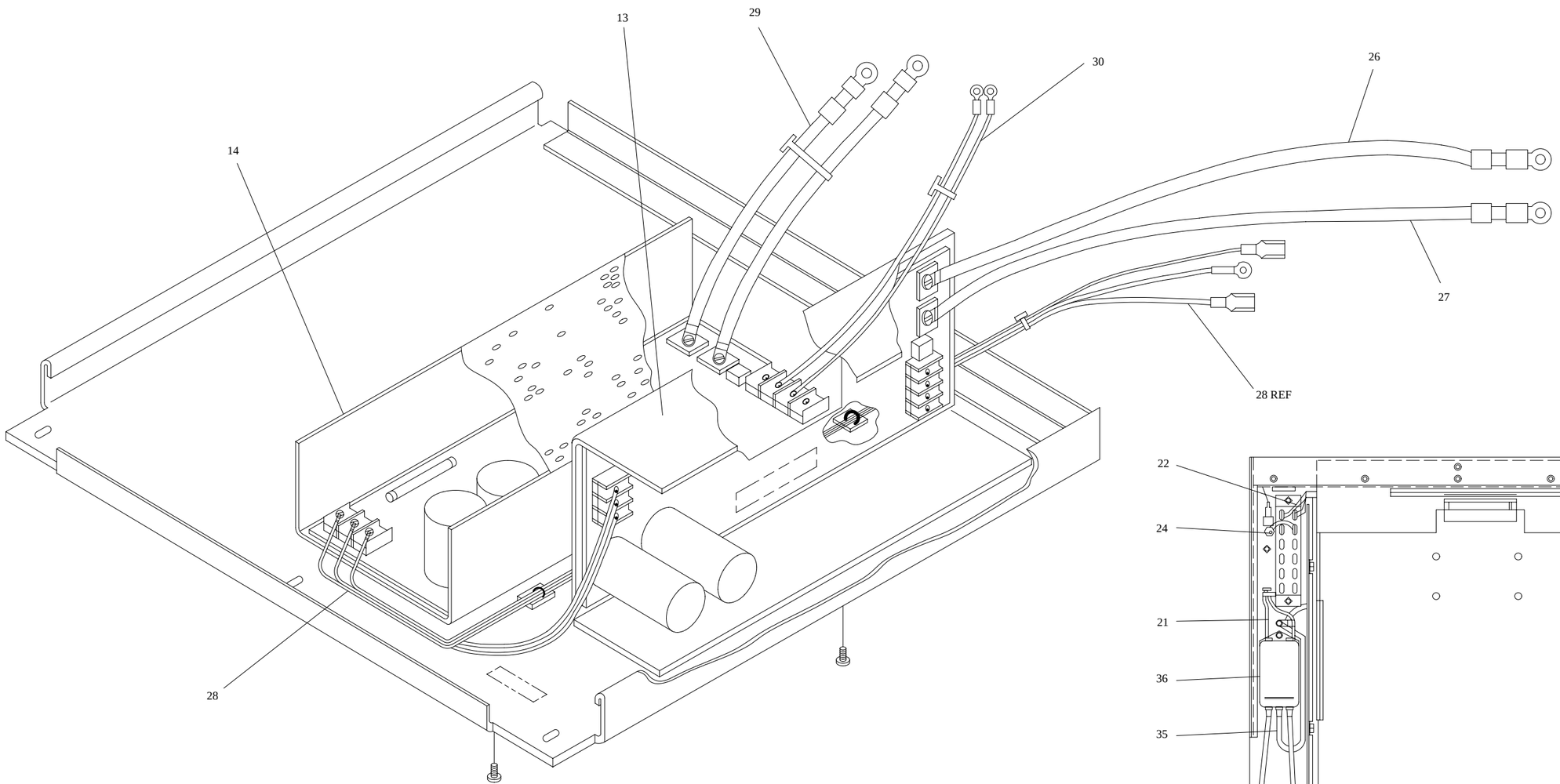

DETAIL A

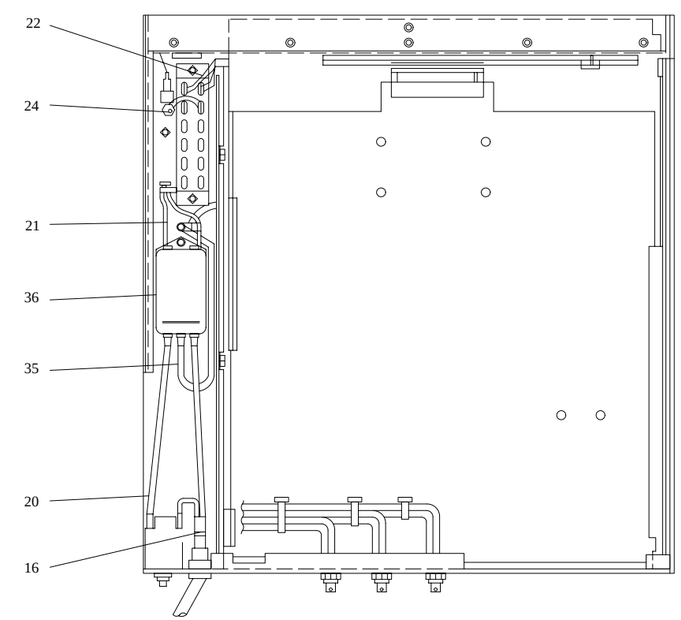

UD41A13 CHASSIS ASSEMBLY
POWER SUPPLIES REMOVED

NX1207

FIGURE 48. Graphics Processor Assembly, UD41A13 (Sheet 2 of 2)

FIGURE AND INDEX NO.	REF DES	PART NUMBER	INDENT	DESCRIPTION	CAGE CODE	QTY PER ASSY	CODES SMR	CODES USABLE ON
48−	41A13	512384−07	1	GRAPHICS PROCESSOR ASSEMBLY (For NHA see FIGURE 46 on Page 2 − 365)	55257	REF	PBODD	
48−1	41A13A1	512390−01	2	PRINTED CIRCUIT BOARD ASSEMBLY, CURSOR	55257	1	PAOLD	
48−2	41A13A2 41A13A3 41A13A7 THRU 41A13A10	512184−04	2	PRINTED CIRCUIT BOARD ASSEMBLY, REFRESH MEMORY	55257	6	PAOLD	
48−3	41A13A4 41A13A5	512899−02	2	PRINTED CIRCUIT BOARD ASSEMBLY, 12A VIDEO	55257	2	PAOLD	
48−4	41A13A6	513608−01	2	PRINTED CIRCUIT BOARD ASSEMBLY, GRAPHICS ACCELERATE, PROCESSOR	55257	1	PAOLD	
48−5	41A13A11	513593−01	2	PRINTED CIRCUIT BOARD ASSEMBLY, BACKPLANE	55257	1	PAOLD	
48−6	41A13A12	513686−01 REV B8	2	PRINTED CIRCUIT BOARD, PROCESSOR	55257	1	PAOLD	
48−7	41A13A13	512426−03	2	PRINTED CIRCUIT BOARD ASSEMBLY, GPIF/DMA	55257	1	PAOLD	
48−8	41A13A14	513616−01	2	PRINTED CIRCUIT BOARD ASSEMBLY, GRAPHICS ACCELERATE, INTERFACE	55257	1	PAOLD	
48−9	41A13A15	514276−01	2	PRINTED CIRCUIT BOARD ASSEMBLY, FRONT PANEL ASSEMBLY	55257	1	PAODD	
48−10	41A13CB1	2310062−01	2	CIRCUIT BREAKER (06402) (ALT PN 45−700−P10−DD−15 AMP)	55257	1	PAOZZ	
48−11	41A13B1 THRU 41A13B3	0110020−01	2	FAN, 3.62 IN	55257	3	PAOZZ	
48−12	41A13B4 THRU 41A13B6	141LS−2282	2	FAN, 4.685 IN. (55257) (spec dwg 0100101−00)	60856	3	PAOZZ	
48−13	41A13PS1	511533−05	2	POWER SUPPLY	55257	1	PAODD	
48−14	41A13PS2	514210−01	2	POWER SUPPLY, −2V, −5.2V	55257	1	PAODD	
48−15	41A13S1	1542.1121	2	SWITCH, ROCKER, 16A, 125/250 VAC, ON−OFF (55257) (spec dwg 9060049−01)	7W718	1	PAOZZ	
48−16	41A13W7	511557−01	2	CABLE ASSEMBLY, POWER	55257	1	PAOZZ	
	NOTE * : NOT SHOWN							

FIGURE AND INDEX NO.	REF DES	PART NUMBER	INDENT	DESCRIPTION	CAGE CODE	QTY PER ASSY	CODES SMR	CODES USABLE ON
48−17	41W101 *	512015−04	2	CABLE ASSEMBLY, I/F RESET	55257	1	PAOZZ	
48−18	41A13W9	512376−01	2	CABLE ASSEMBLY	55257	2	PAOZZ	
48−19	41A13W26	513989−01	2	CABLE ASSEMBLY, FRONT PANEL	55257	1	PAOZZ	
48−20	41A13W4	511516−01	2	CABLE ASSEMBLY	55257	1	PAOZZ	
48−21	41A13W5	511517−01	2	CABLE ASSEMBLY, LINE FILTER	55257	1	PAOZZ	
48−22	41A13W6	511518−01	2	CABLE ASSEMBLY, TERMINAL BLOCK	55257	1	PAOZZ	
48−23	41A13W1 *	512378−01	2	CABLE ASSEMBLY	55257	1	PAOZZ	
48−24	41A13W10	512377−01	2	CABLE ASSEMBLY, TERMINAL BLOCK	55257	1	PAOZZ	
48−25	41A13W27 *	512446−02	2	CABLE ASSEMBLY, COAXIAL	55257	1	PAOZZ	
48−26	41A13W2	508673−04	2	CABLE ASSEMBLY, +5V, RED	55257	1	PAOZZ	
48−27	41A13W3	508677−03	2	CABLE ASSEMBLY, DC GND	55257	1	PAOZZ	
48−28	41A13W8	511560−02	2	CABLE ASSEMBLY	55257	1	PAOZZ	
48−29	41A13W11	512601−01	2	CABLE ASSEMBLY, POWER SUPPLY	55257	1	PAOZZ	
48−30	41A13W12	512602−01	2	CABLE ASSEMBLY	55257	1	PAOZZ	
48−31	41A13W23 *	513702−01	2	CABLE ASSEMBLY	55257	1	PAOZZ	
48−32	41A13W24 *	513836−01	2	CABLE ASSEMBLY	55257	1	PAOZZ	
48−33	41A13W22 *	513837−01	2	CABLE ASSEMBLY	55257	1	PAOZZ	
48−34	41A13W25	513618−01	2	CABLE ASSEMBLY	55257	3	PAOZZ	
48−35	41A13W13	511558−01	2	CABLE ASSEMBLY, LINE FILTER	55257	1	PAOZZ	
48−36	41A13LF1	6910079−01	2	FILTER, LINE, 10A, 125V	55257	1	PAOZZ	
48−37	*	8603100−00	2	STRAIN RELIEF	55257	1	PAOZZ	
48−38	41A13A16	513703−01	2	FINAL ASSEMBLY, NEXRAD (LESS PCBS)	55257	1	PAODD	
	NOTE * :	NOT SHOWN						

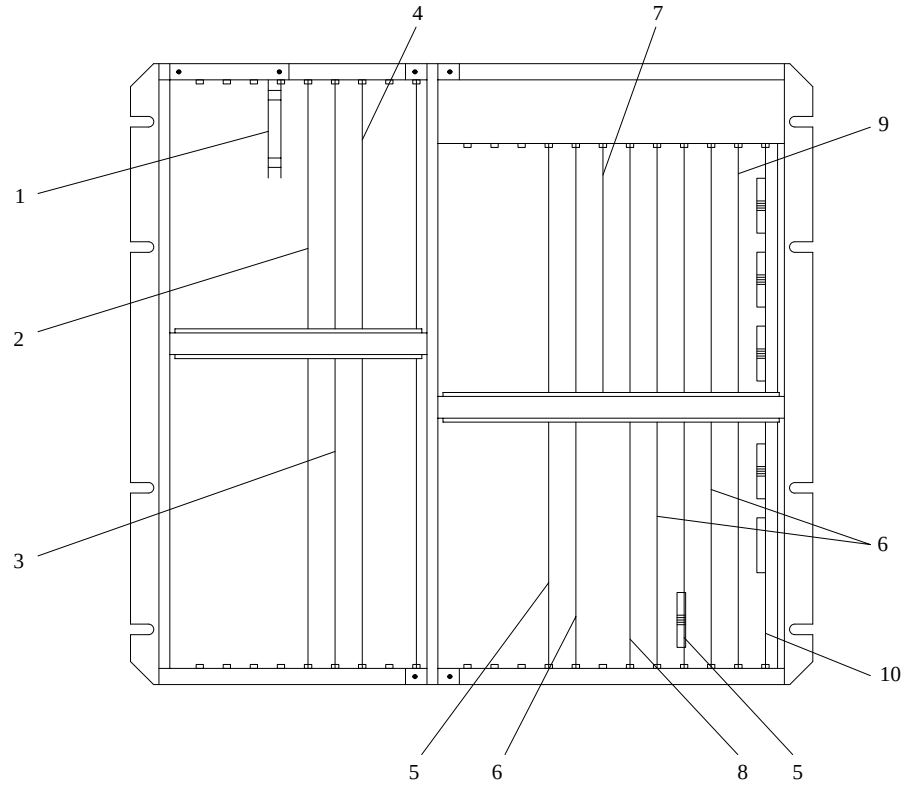

FRONT VIEW

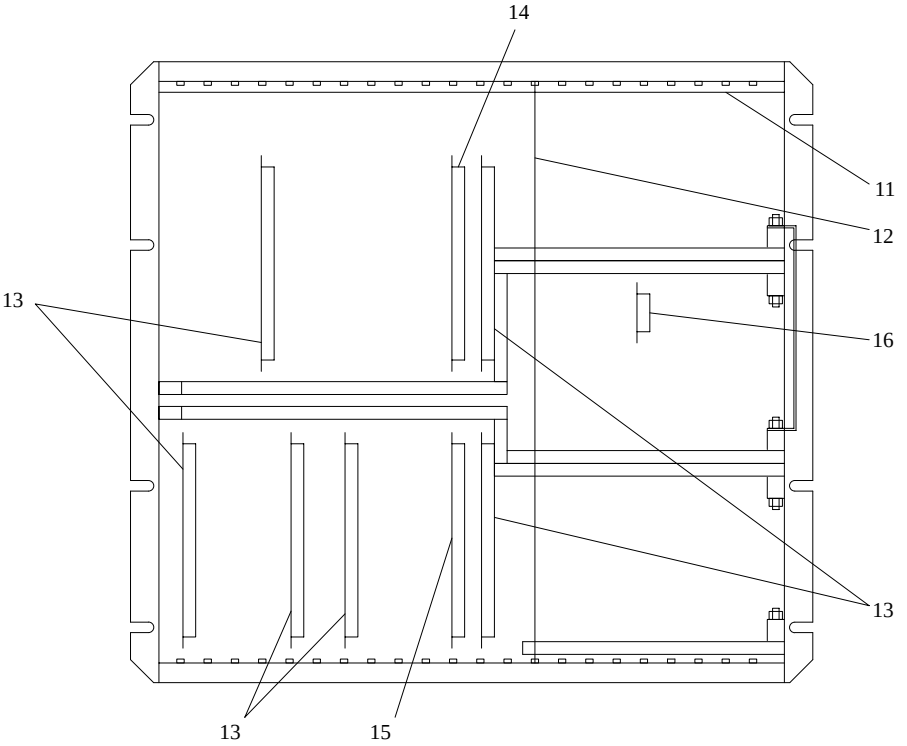

NX1208

REAR VIEW

FIGURE 49. PUP M5/ES Chassis Assembly, UD41A16

FIGURE AND INDEX NO.	REF DES	PART NUMBER	INDENT	DESCRIPTION	CAGE CODE	QTY PER ASSY	CODES SMR	CODES USABLE ON
49−	41A16 **	92−617FXXMXXRXX	1	M5/ES CHASSIS ASSEMBLY, PUP (For NHA see FIGURE 46 on Page 2 − 365)	30331	REF	PDDOD	
49−1	41A16A3 **	93−ABSF00MXXRXX	2	TEMP SENSE ASSEMBLY, UPPER CHASSIS	30331	1	PAOLD	
49−2	41A16A4 **	35−AAMF00MXXRXX	2	MICRO 5 PROCESSOR ASSEMBLY	30331	1	PAOLD	
49−3	41A16A5 **	35−941F00M01RXX	2	CIRCUIT CARD ASSEMBLY, DIRECT MEMORY INTERFACE	30331	1	PAOLD	
49−4	41A16A6 **	35−ABIF07MXXRXX	2	CIRCUIT CARD ASSEMBLY, CMM, 8MB	30331	1	PAOLD	
49−5	41A16A17	96−162F01M00R13 OR 96−162F01M01R06	2	CIRCUIT CARD ASSEMBLY, OPTICAL DISK CONTROLLER	30331	1	PAOLD	
49−6	41A16A13 41A16A16 41A16A18 **	35−732F00MXXRXX	2	CIRCUIT CARD ASSEMBLY, SELECTOR CHANNEL	30331	3	PAOLD	
49−7	41A16A14A1 **	35−583F00MXXRXX	2	CIRCUIT CARD ASSEMBLY, DIGITAL I/O	30331	1	PAOLD	
49−8	41A16A15	513754−01	2	CIRCUIT CARD ASSEMBLY, GRAPHICS INTERFACE	55257	1	PAOLD	
49−9	41A16A19	202660	2	MODULE, VCI−C (56232) (spec dwg 1222346−202)	65994	1	PAOLD	
49−10	41A16A20 **	35−910F01MXXRXX	2	CIRCUIT CARD ASSEMBLY, MULTIPERIPHERAL CONTROLLER W/IPL	30331	1	PAOLD	
49−11	41A16A21 **	35−955F01MXXRXX	2	CIRCUIT CARD ASSEMBLY, CLOCK DISTRIBUTION, S BUS	30331	1	PAOLD	
49−12	41A16AT1 **	35−886F00MXXRXX	2	CIRCUIT CARD ASSEMBLY, TERMINATOR, S BUS	30331	1	PAOLD	
49−13	41A16AT3 41A16AT4 41A16AT7 THRU 41A16AT10 **	35−813F01MXXRXX	2	CIRCUIT CARD ASSEMBLY, I/O TERMINATOR	30331	6	PAOZZ	
49−14	41A16AT5 **	35−814F01MXXRXX	2	CIRCUIT CARD ASSEMBLY, DMA TERMINATOR	30331	1	PAOZZ	

NOTE * : NOT SHOWN

NOTE ** : REQUISITION HIGHEST REVISION LEVEL NSN MANAGED BY SOURCE OF SUPPLY (SOS) G13 OR S9_

Section II. Maintenance Parts List

FIGURE AND INDEX NO.	REF DES	PART NUMBER	INDENT	DESCRIPTION	CAGE CODE	QTY PER ASSY	CODES	
							SMR	USABLE ON
49−15	41A16AT6 **	35−814F02MXXRXX	2	CIRCUIT CARD ASSEMBLY, DMA TERMINATOR	30331	1	PAOZZ	
49−16	41A16AT2 **	35−ADLF00MXXRXX	2	TERMINATOR BOARD	30331	1	PAOZZ	
49−17	* **	17−989F02MXXRXX	2	CABLE, TRANSMISSION, 40 FLAT	30331	1	PAOZZ	

NOTE * : NOT SHOWN

NOTE ** : REQUISITION HIGHEST REVISION LEVEL NSN MANAGED BY SOURCE OF SUPPLY (SOS) G13 OR S9_

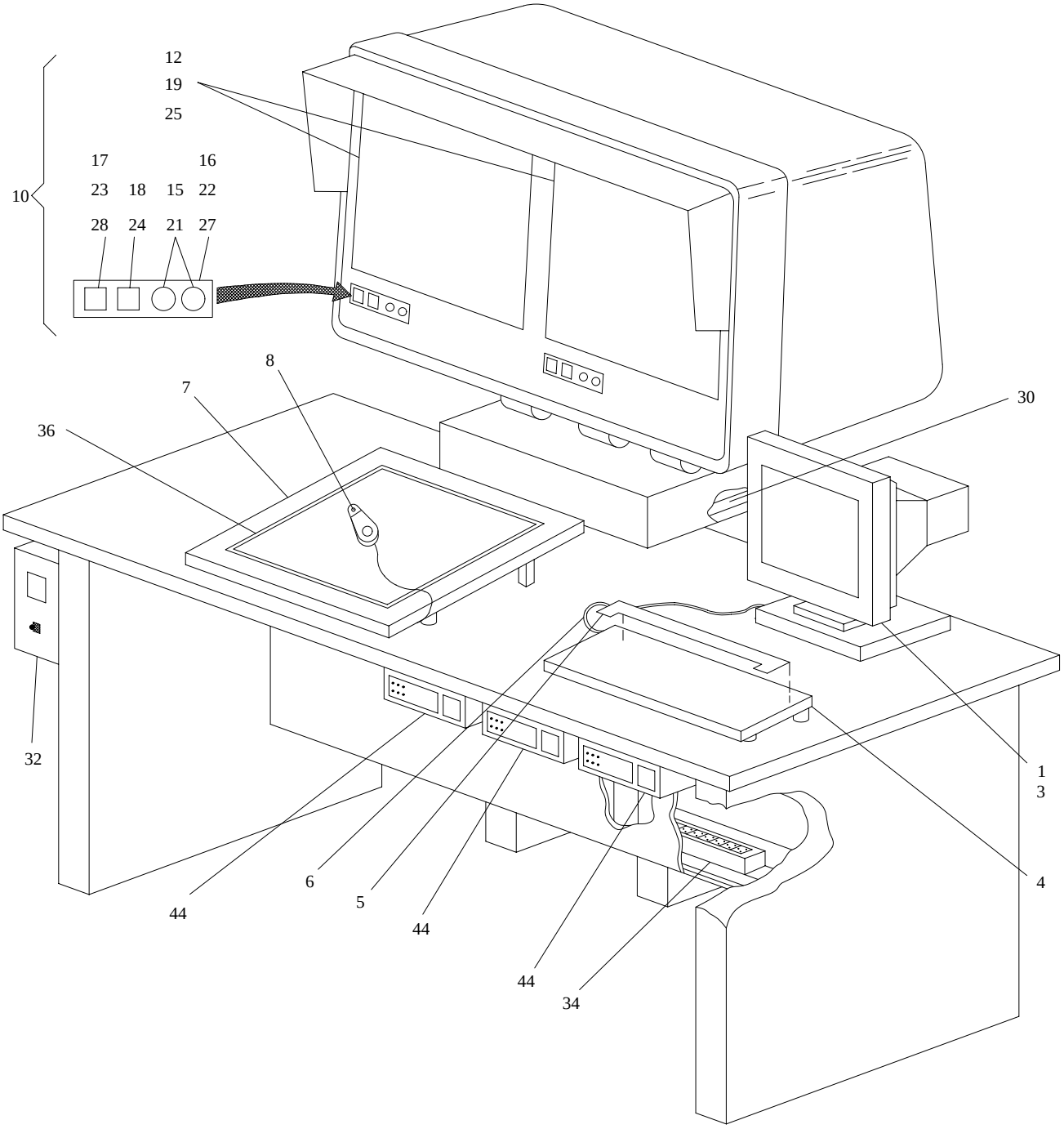

NX1209

FIGURE 50. PUP Workstation (Sheet 1 of 3)

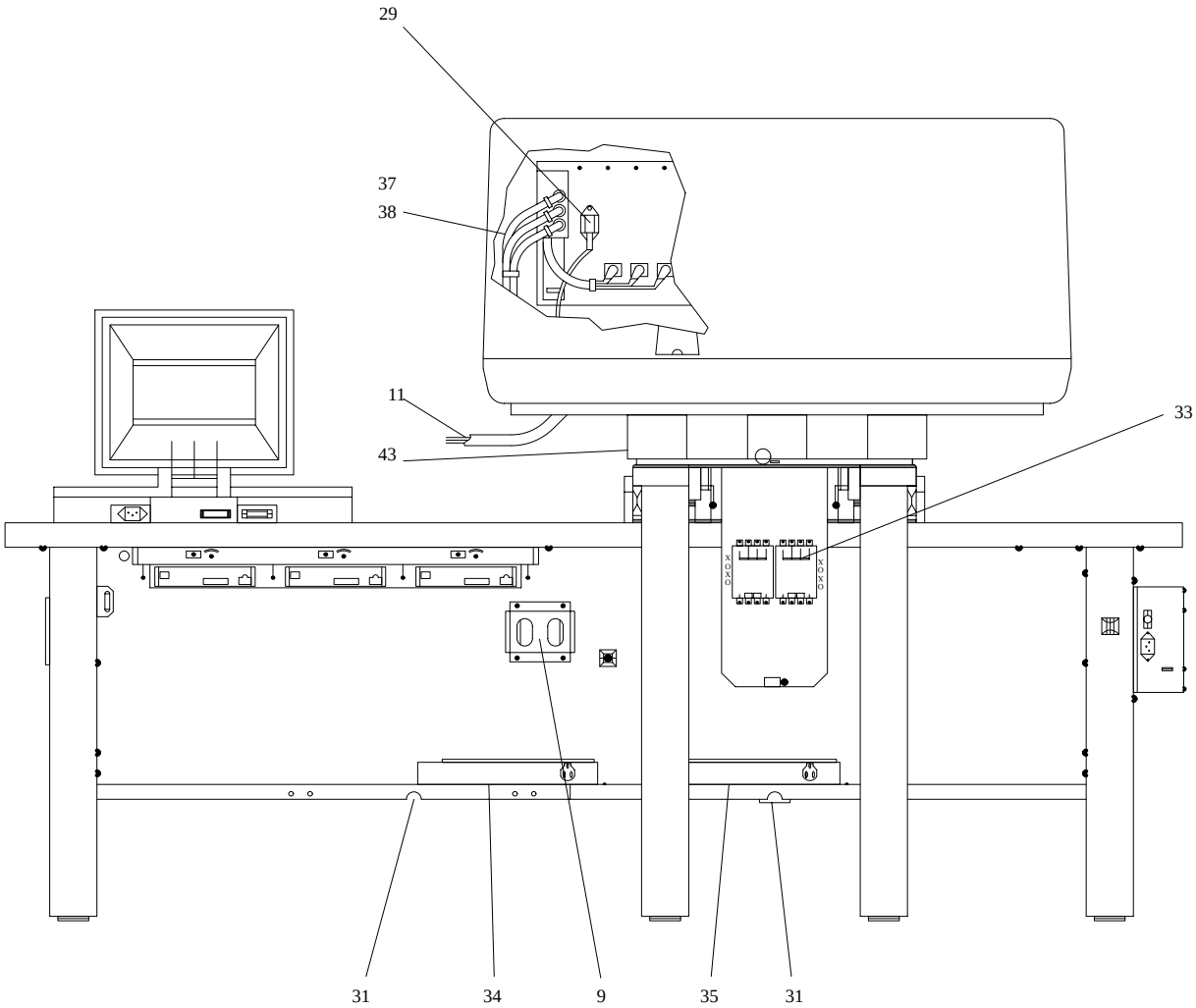

NX1210

FIGURE 50. PUP Workstation (Sheet 2 of 3)

CABLE ASSEMBLIES (NOT SHOWN)

INDEX NO.	REF DES	FROM	TO	USABLE ON CODE
50−39	*W356	45A3DTE	43SES1−EIA	B

* CABLES FOR PUP WORKSTATION WITH 300 FOOT EXTENSION

FIGURE 50. PUP Workstation (Sheet 3 of 3)

FIGURE AND INDEX NO.	REF DES	PART NUMBER	INDENT	DESCRIPTION	CAGE CODE	QTY PER ASSY	CODES SMR	CODES USABLE ON
50−	*	1213666−301	1	PUP WORKSTATION (For NHA see FIGURE 45 on Page 2 − 354)	56232	REF	XC	A
	*	1213666−302	1	PUP WORKSTATION (For NHA see FIGURE 45 on Page 2 − 354)	56232	REF	XC	B
50−1	43A1 * ***	27−211F01MXXRXX	2	MONITOR, CDT−100	30331	1	PAOLD	
50−2	**	239001 OR 239002	3	FUSE (When replacing fuse, ensure correct fuse is installed −− 1 Amp or 2 Amp)	81349	1	PAOZZ	
50−3		ME210	3	ADAPTER, NULL MODEM (0WY55) (vendor item dwg 2200021−201)	59951	1	PAOZZ	
50−4	43A2 * ***	27−212F01MXXRXX	2	KEYBOARD, CDT−100 (53073) (ALT PN 598−0012175) (53073) (ALT PN 598−0004322)	30331	1	PAOZZ	
50−5	43MP1	1217758−203	3	MASK, KEYBOARD	56232	1	PAOZZ	
50−6	43A1W1 * ***	17−854F00MXXRXX	2	CABLE, EXTERNAL/CRT, 25 FT	30331	1	PAOOO	
50−7	44	DT4213−ST	2	CONTROL MODULE ASSEMBLY (DIGITIZING DATA TABLET) (PUCK NOT FURNISHED SEPARATELY, SUPPLIED WITH CONTROL MODULE ASSEMBLY) (56232) (spec dwg 1213667−201)	62712	1	PAODD	
50−8	44A1	DT−130	3	MOUSE, DATA ENTRY	62712	1	PAOZZ	
50−9	44PS1	DT 920	3	POWER SUPPLY (56232) (spec dwg 1213667−202) (62712) (ALT PN DT−94B)	62712	1	PAOZZ	
50−10	45	1213710−301	2	GRAPHICS DISPLAY ASSEMBLY	56232	1	XB	A
	45	1213710−302	2	GRAPHICS DISPLAY ASSEMBLY	56232	1	XB	B
50−11	45P1	3920047−01	3	POWER CORD	55257	1	PAOZZ	
50−12	45A1 45A2	513227−03	3	MONITOR, COLOR (HM−4119)	55257	2	PAODD	
50−13	**	513421−01	4	CABLE ASSEMBLY, VIDEO	55257	2	PAOZZ	

NOTE: * : SITE DEPENDENT

NOTE: ** : NOT SHOWN

NOTE: *** : REQUISITION HIGHEST REVISION LEVEL NSN MANAGED BY SOURCE OF SUPPLY (SOS) G13 OR S9_

FIGURE AND INDEX NO.	REF DES	PART NUMBER	INDENT	DESCRIPTION	CAGE CODE	QTY PER ASSY	CODES SMR	CODES USABLE ON
50−14	45A1A1 ** 45A2A1	513433−01	4	BRIGHTNESS/CONTRAST CONTROL BOARD	55257	2	PAOLD	
50−15	45A1MP1 45A2MP1	RB−67−2A−SHANK−M	5	KNOB, BRIGHTNESS OR CONTRAST (55257) (spec dwg 9060077−01)	86797	4	PAOZZ	
50−16	45A1A2 45A2A2	513503−02	4	CONTROL PANEL, FACEPLATE	55257	2	PAOZZ	
50−17	45A1S1 45A2S3	9060053−01	4	SWITCH, ON/OFF, ROCKER, DPDT, 16A 250 VAC	55257	2	PAOZZ	
50−18	45A1S2 45A2S4	9060054−01		SWITCH, DEGAUSS, ROCKER, SPST, MOMENTARY	55257	2	PAOZZ	
50−19	45A1 45A2	513227−04	3	MONITOR, COLOR (HM−4319)	55257	2	PAODD	
50−20	45A1A1 ** 45A2A1	513433−02	4	BRIGHTNESS/CONTRAST CONTROL BOARD (0WY55) (ALT PN 2200088−201)	55257	2	PAOLD	
50−21	45A1MP1 45A2MP1	RB−67−2A−SHANK−M	5	KNOB, BRIGHTNESS OR CONTRAST (55257) (spec dwg 9060077−01)	86797	4	PAOZZ	
50−22	45A1A2 45A2A2	513503−02	4	CONTROL PANEL, FACEPLATE	55257	2	PAOZZ	
50−23	45A1S1 45A1S3	9060053−01	4	SWITCH, ON/OFF, ROCKER, DPDT, 16A 250 VAC	55257	2	PAOZZ	
50−24	45A1S2 45A2S4	9060054−01	4	SWITCH, DEGAUSS, ROCKER, SPST MOMENTARY	55257	2	PAOZZ	
50−25	45A1 45A2	513227−05	3	MONITOR, COLOR (HM−4520)	55257	2	PAODD	
50−26	45A1A1 45A2A1	514504−01	4	BRIGHTNESS/CONTRAST/ DEGAUSS CONTROL BOARD	55257	2	PAOLD	
50−27	45A1A2 45A2A2	514515−01	4	CONTROL PANEL, FACEPLATE	55257	2	PAOZZ	
50−28	45A1S1 45A1S3	9060053−01	4	SWITCH, ON/OFF, ROCKER, DPDT, 16A 250 VAC	55257	2	PAOZZ	
50−29	45P2	3920055−01	4	POWER CORD	55257	2	PAOZZ	
50−30	45MS3	3300−12	3	SLIDE, CHASSIS, 12 IN. (55257) (ALT PN 0310103−01)	16499	2	PAOZZ	

NOTE: * : SITE DEPENDENT

NOTE: ** : NOT SHOWN

NOTE: *** : REQUISITION HIGHEST REVISION LEVEL NSN MANAGED BY SOURCE OF SUPPLY (SOS) G13 OR S9_

FIGURE AND INDEX NO.	REF DES	PART NUMBER	INDENT	DESCRIPTION	CAGE CODE	QTY PER ASSY	CODES SMR	CODES USABLE ON
50−31	45MS4	370−12	3	GROMMET, RUBBER (55257) (spec dwg 1710009−01)	05236	2	PCOZZ	
50−32	46	106463	2	AUDIBLE ALARM (56232) (spec dwg 1218189−201)	16111	1	PAOLD	
				(ATTACHING PARTS)				
		MS51958−65	2	SCREW	96906	4	PAOZZ	
		MS35338−138	2	WASHER	96906	4	PAOZZ	
		MS15795−808	2	WASHER	96906	4	PAOZZ	
				− − − − − − − − −				
50−33	48 51	SP2085−RES911555	2	EQUALIZER/RGBS LINE DRIVER (56232) (spec dwg 1218739−201)	0PDG4	2	PAOZZ	B
50−34	J1	1218758−101	2	POWER STRIP ASSEMBLY, MODIFIED	56232	1	PAOZZ	
50−35	J2	1218758−101	2	POWER STRIP ASSEMBLY, MODIFIED	56232	1	PAOZZ	B
				(ATTACHING PARTS)				
		MS51958−65	2	SCREW	96906	2	PAOZZ	
		MS35338−138	2	WASHER	96906	2	PAOZZ	
		MS15795−808	2	WASHER	96906	2	PAOZZ	
		MS35650−304	2	NUT	96906	2	PAOZZ	
				− − − − − − − − −				
50−36	44MP2	2200013−201	2	TABLET, OVERLAY, GRAPHIC (USE WITH SOFTWARE BUILD 10.0)	0WY55	1	PAOZZ	
50−37		510291−02	2	CABLE ASSEMBLY, COAXIAL, GREEN	55257	2	PAOZZ	
50−38		510291−03	2	CABLE ASSEMBLY, COAXIAL, BLUE	55257	2	PAOZZ	
50−39	W356 **	1219727−301	2	CABLE ASSEMBLY	56232	1	PAOOO	B
50−40	W356P1 ** W356P2	DBU−25PF0	3	CONNECTOR, PLUG, ELECTRICAL (56232) (spec dwg 1218768−203)	71468	2	PAOZZ	B
50−41	**	M39029/64−369	3	CONTACT PIN	81349	15	PAOZZ	B

NOTE: * : SITE DEPENDENT

NOTE: ** : NOT SHOWN

NOTE: *** : REQUISITION HIGHEST REVISION LEVEL NSN MANAGED BY SOURCE OF SUPPLY (SOS) G13 OR S9_

FIGURE AND INDEX NO.	REF DES	PART NUMBER	INDENT	DESCRIPTION	CAGE CODE	QTY PER ASSY	CODES SMR	CODES USABLE ON
50−42	**	17−1657−25	3	BACKSHELL, D−SUB, RFI/EMI (38250) (ALT PN C88000203) (56232) (spec dwg 1218764−203)	02660	2	PAOZZ	B
50−43	45MP200	513610−01	2	TRIPLE SWIVEL ASSEMBLY	55257	1	PAOZZ	
50−44	45A3 THRU 45A5	28200	2	MODEM, LIMITED DISTANCE (56232) (spec dwg 1218745−201)	0BF49	3	PAOLD	B
50−45	45S6 **	E79−30A	2	SWITCH, CHEAT, PUSHBUTTON (55257) (spec dwg 9060006−01)	01963	1	PAOZZ	

USABLE ON CODES

A − LIMITED SCALE PRODUCTION

B − FULL SCALE PRODUCTION

NOTE: * : SITE DEPENDENT

NOTE: ** : NOT SHOWN

NOTE: *** : REQUISITION HIGHEST REVISION LEVEL NSN MANAGED BY SOURCE OF SUPPLY (SOS) G13 OR S9_

SHELTER TYPES 1, 2, AND 4

NOTE 1: Type 2 has no toilet.

NOTE 2: Type 4 has 3−ton ECU (51−49).

NOTE 3: Coastal/high humidity area sites must specify a replacement ECU with coated coils (51−50).

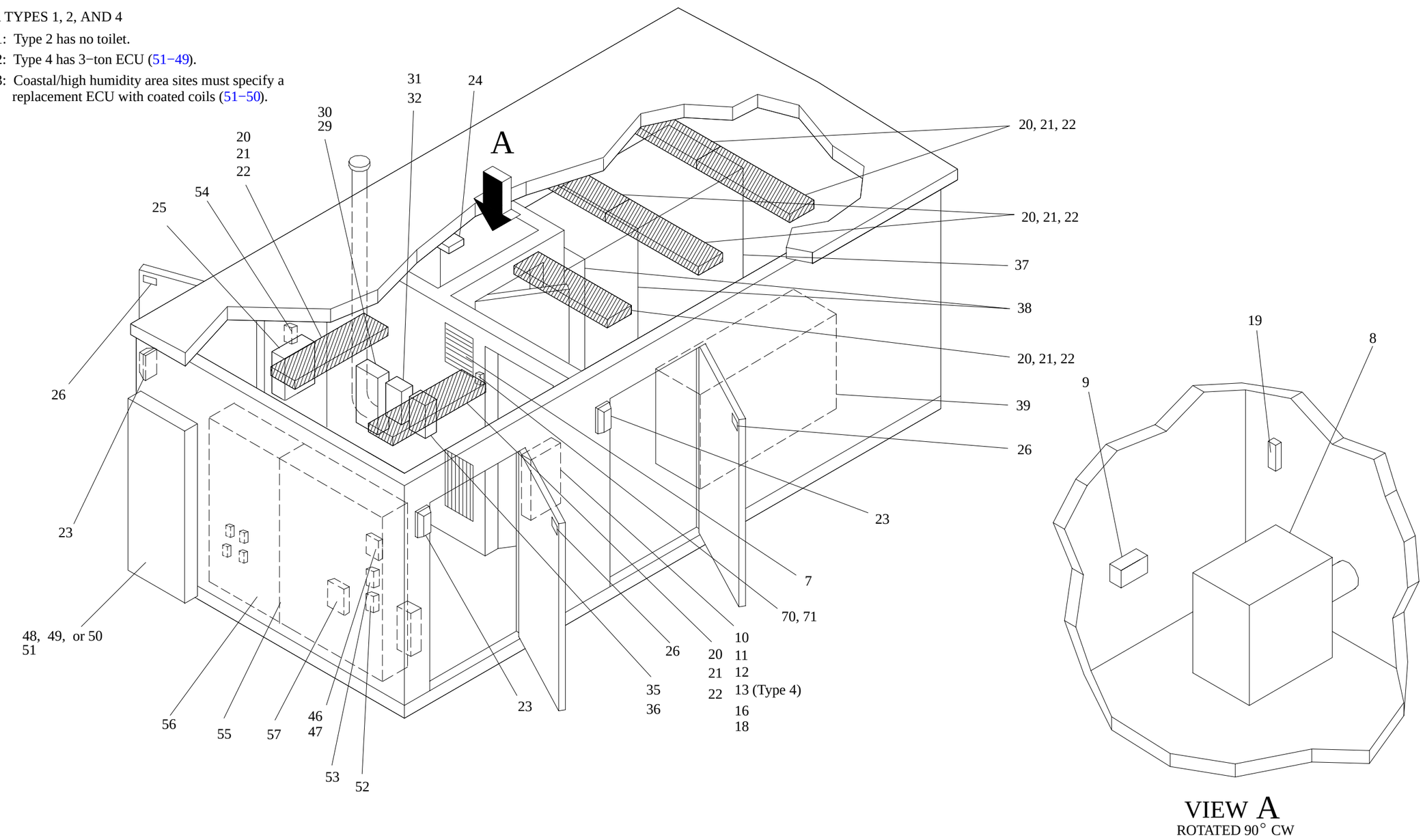

FIGURE 51. Shelter, Transition Power Maintenance, UD60 (Sheet 1 of 3)

SHELTER TYPE 3

NOTE 1: Item 51−4 installed at Missoulla, MT and item 51−5 at Medford, OR. Use either item 51−4 or 51−5 for replacement.

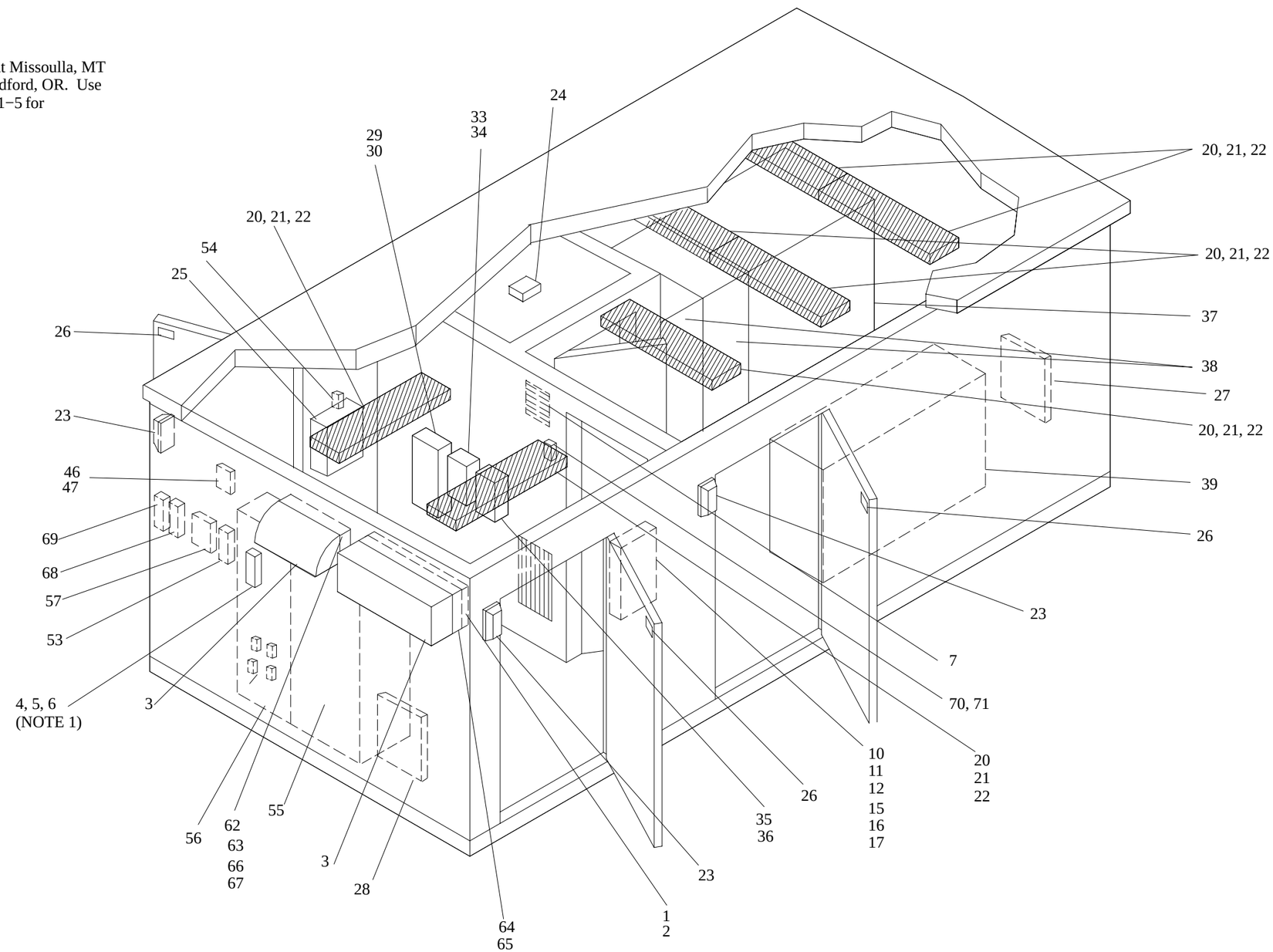

FIGURE 51. Shelter, Transition Power Maintenance, UD60 (Sheet 2 of 3)

SHELTER TYPES 5, 6, 7, AND 9

NOTE 1: Type 6 has no toilet and no bathroom. (Items 51−8, 51−9, 51−19 and 51−24 are not installed).

NOTE 2: Types 4 and 7 have 3−ton ECU (item 51−49).

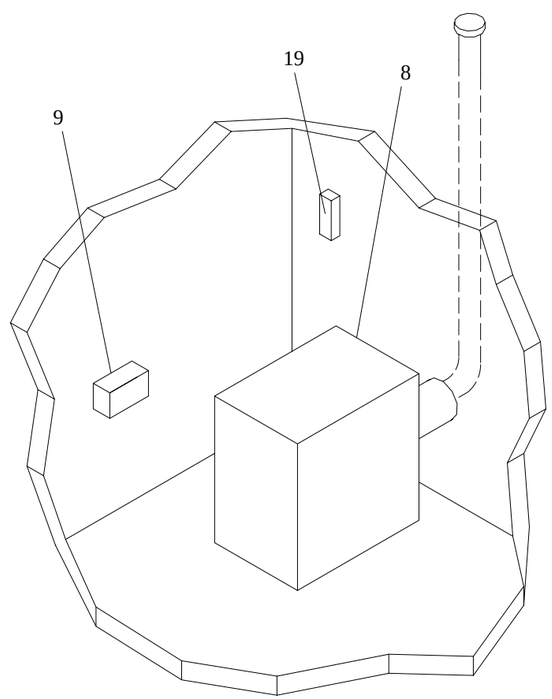

VIEW A

ROTATED 90° CW

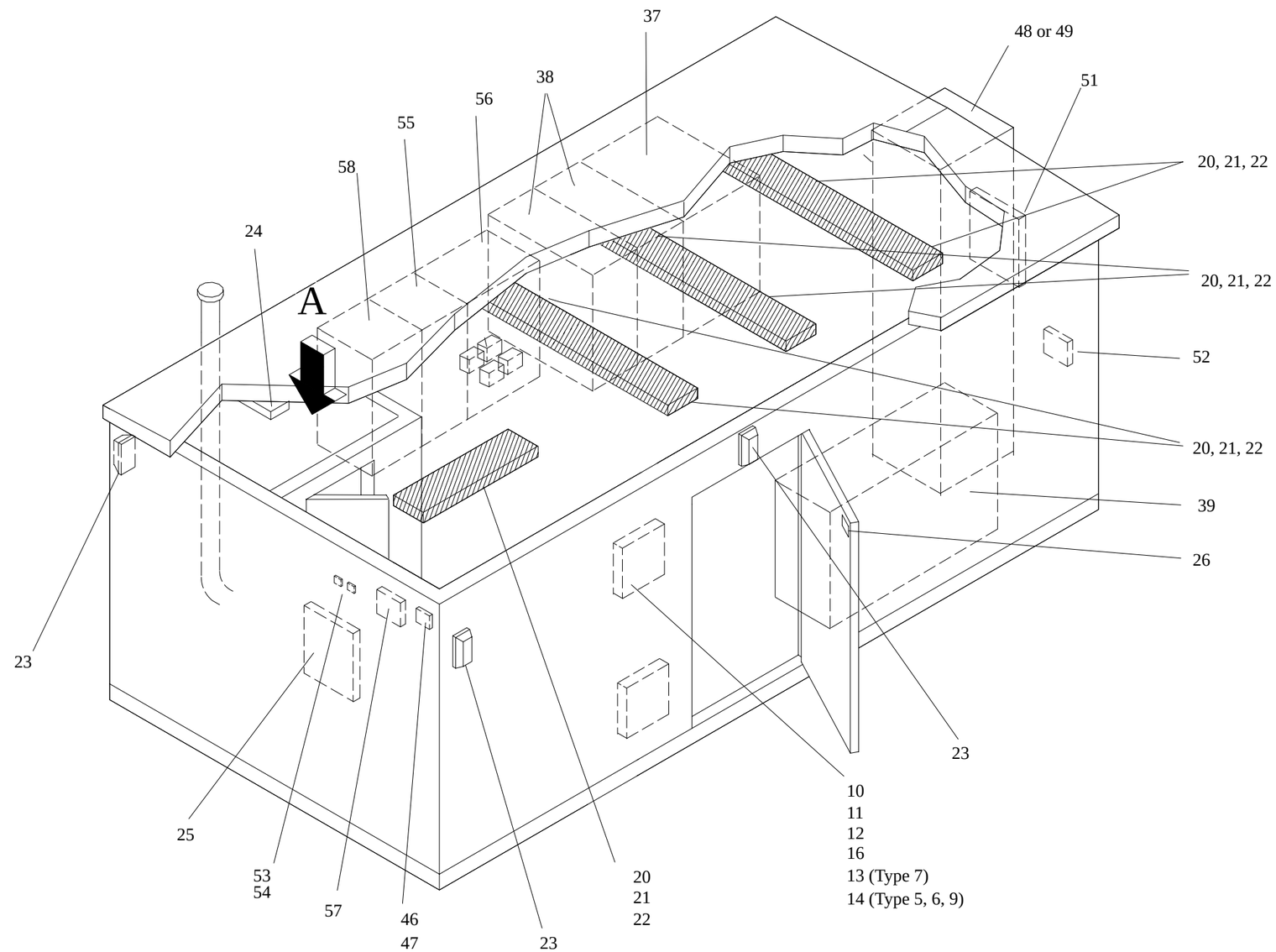

FIGURE 51. Shelter, Transition Power Maintenance, UD60 (Sheet 3 of 3)

FIGURE AND INDEX NO.	REF DES	PART NUMBER	INDENT	DESCRIPTION	CAGE CODE	QTY PER ASSY	CODES SMR	CODES USABLE ON
51−	60	D−3877/D−5748	1	SHELTER, TRANSITION POWER MAINTENANCE, TYPES 1 AND 2; ROC AND RALEIGH, NC (For NHA see FIGURE 1 on Page 2 − 1)	0E2J5	REF	PDDDD	
	60	D−4065/D−5751	1	SHELTER, TRANSITION POWER MAINTENANCE, TYPES 1 AND 2 (For NHA see FIGURE 1 on Page 2 − 1)	0E2J5	REF	PDDDD	
	60	D−4154/D−5750	1	SHELTER, TRANSITION POWER MAINTENANCE, TYPE 3; MEDFORD, OR, AND MISSOULA, MT (For NHA see FIGURE 1 on Page 2 − 1)	0E2J5	REF	PDDDD	
	60	D−4625/D−5749	1	SHELTER, TRANSITION POWER MAINTENANCE, TYPE 4 (For NHA see FIGURE 1 on Page 2 − 1)	0E2J5	REF	PDDDD	
	60	D−5606	1	SHELTER, TRANSITION POWER MAINTENANCE, TYPE 5 (For NHA see FIGURE 1 on Page 2 − 1)	0E2J5	REF	PDDDD	
	60	D−5659	1	SHELTER, TRANSITION POWER MAINTENANCE, TYPE 6 (For NHA see FIGURE 1 on Page 2 − 1)	0E2J5	REF	PDDDD	
	60	D−5660	1	SHELTER, TRANSITION POWER MAINTENANCE, TYPE 7 (For NHA see FIGURE 1 on Page 2 − 1)	0E2J5	REF	PDDDD	
	60	D−5938	1	SHELTER, TRANSITION POWER MAINTENANCE, TYPE 9 (For NHA see FIGURE 1 on Page 2 − 1)	0E2J5	REF	PDDDD	
	60A2		2	TPMS VENTILATION GROUP		1		B
51−1	60A2A5A2	11576	2	FILTER FRAME, 18X48X1	0E2J5	1	PAOZZ	B
51−2	60A2A5A2A1	5W975	2	FILTER, AIR, INTAKE, 18X24X1 (0E2J5) (ALT PN 11577)	25795	1	PAOZZ	B
	60A2A7		2	HEAT TRACE CABLE ASSEMBLY			XB	B
51−3	60A2A7A1	RSX 10−1	2	CABLE, HEAT TRACE (0E2J5) (ALT PN 24625)	53345	2	PAOZZ	B
	NOTE * :	NOT SHOWN						

FIGURE AND INDEX NO.	REF DES	PART NUMBER	INDENT	DESCRIPTION	CAGE CODE	QTY PER ASSY	CODES SMR	CODES USABLE ON
51−4	60A2A7MP1	545−0202−007	2	ENCLOSURE, THERMOSTAT, OUTER (0E2J5) (ALT PN 24624)	0HJ40	1	PAOZZ	B
51−5	60A2A7MP2	HC664J1C12	3	ENCLOSURE, THERMOSTAT, INNER (0E2J5) (ALT PN 24624.1)	0CSN0	1	PAOZZ	B
51−6	60A2A7A2A1S1	A19ABC−24C	4	HEAT TRACE CABLE THERMOSTAT (0E2J5) (ALT PN 24621)	92578	1	PAOZZ	B
51−7	60A3A2	BD6	3	GRAVITY DAMPER, 16X16 (0E2J5) (ALT PN 22993) (Installed but not used)	34081	1	PAOZZ	D
51−8	60A4	MODEL WB	2	ELECTRIC TOILET, 1800 WATTS, 120V AC (0E2J5) (ALT PN 11974) (For breakdown see FIGURE 52 on Page 2 − 419)	23989	1	PBOOO	J
51−9	60A4A15	DIS001	3	TOILET LINER DISPENSER (0E2J5) (ALT PN 14110)	23989	1	PAOZZ	J
51−10	60A5	NQOD430M100CUVH	2	SHELTER POWER DISTRIBUTION SYSTEM MAIN BREAKER PANEL, 100 AMP (0E2J5) (ALT PN 23272)	56303	1	XB	
51−11	60A5CB1	QOB3100VH	3	100A, 3 POLE MAIN BREAKER (0E2J5) (ALT PN 22728)	56303	1	PAOZZ	
51−12	60A5CB2 60A5CB4 60A5CB7 60A5CB11	QOB120VH	3	20A, 1 POLE CIRCUIT BREAKER (0E2J5) (ALT PN 22943)	56303	4	PAOZZ	
51−13	60A5CB5−1	QOB235VH	3	35A, 2 POLE CIRCUIT BREAKER	56303	1	XB	C
51−14	60A5CB3/CB5	QOB230VH	3	30A, 2 POLE CIRCUIT BREAKER (0E2J5) (ALT PN 10989)	56303	1	XB	E
51−15	60A5CB10/CB12	QOB230VH	3	30A, 2 POLE CIRCUIT BREAKER (0E2J5) (ALT PN 10989)	56303	1	XB	B
51−16	60A5CB6	QOB115VH	3	15A, 1 POLE CIRCUIT BREAKER (0E2J5) (ALT PN 22942)	56303	1	PAOZZ	
51−17	60A5CB8	QOB115VHGFI	3	15A, 1 POLE GFI CIRCUIT BREAKER (0E2J5) (ALT PN 24628)	56303	1	PAOZZ	B
	NOTE * :	NOT SHOWN						

FIGURE AND INDEX NO.	REF DES	PART NUMBER	INDENT	DESCRIPTION	CAGE CODE	QTY PER ASSY	CODES SMR	CODES USABLE ON
51−18	60A5CB8/CB10	QOB230VH	3	30A, 2 POLE CIRCUIT BREAKER (0E2J5) (ALT PN 10989)	56303	1	XB	A
51−19	TPMS31	TGTR215−I	3	15A, 1 POLE GFI RECEPTACLE, 4X4 (0E2J5) (ALT PN 12647) (74545) (ALT PN GF5252IA)	60969	1	XB	J
51−20	60DS4 THRU 60DS10	LB240A120ESRIF	2	INTERIOR LIGHT FIXTURE (0E2J5) (ALT PN 22841)	16543	7	XB	
51−21	60DS4A1 THRU 60DS10A1	446−L−SLH−TC−P	3	BALLAST (0E2J5) (ALT PN 13524) (3S145) (ALT PN R−2S40−TP)	0LG51	7	PAOZZ	
51−22	60DS4A2 THRU 60DS10A2	RIF−1	3	120V ES RIF FILTER (0E2J5) (ALT PN 13523)	16543	7	PAOZZ	
51−23	60DS1 60DS2 60DS3	3650	2	EXTERIOR LIGHT (0E2J5) (ALT PN 10278)	52770	3	PAOZZ	
51−24	60DS11	668	2	INTERIOR LIGHT FIXTURE (0E2J5) (ALT PN 40076)	72041	1	XB	
51−25	60A6	A−16N16ALP	2	ALARM TERMINATION CABINET (0E2J5) (ALT PN 10514)	00843	1	XB	
51−26	60A6A1 60A6A2 60A6A3	39−2GY	3	SWITCH, DOOR ALARM, MAGNETIC (0E2J5) (ALT PN 13272)	33240	3	PAOZZ	
51−27	60A7	CWH2202	2	HEATER, FORCED AIR (0E2J5) (ALT PN 24622)	0J1V5	1	PAOZZ	B
51−28	60A8	CWH3504	2	UNIT HEATER	0J1V5	1	PAOZZ	B
51−29	61A5S1	D324N	3	200 AMP FUSED INPUT (0E2J5) (ALT PN 24340)	56365	1	PAOZZ	D
51−30	61A5S1F1 61A5S1F2 61A5S1F3	FLNR200ID	4	FUSE, 200 AMP, CLASS RK5 (0E2J5) (ALT PN 10262)	75915	3	PAOZZ	D
51−31	61A5S2	H323N	3	100 AMP FUSED DISCONNECT (MAINTENANCE BYPASS) (0E2J5) (ALT PN 22559)	56365	1	PAOZZ	K
51−32	61A5S2F1 61A5S2F2 61A5S2F3	WF1814/58−D5100	4	FUSE, 100 AMP (75915) (ALT PN FLN−R100) (0E2J5) (ALT PN 12379)	81348	3	PAOZZ	K
51−33	61A105S2	H324N	3	200 AMP FUSED DISCONNECT (MAINTENANCE BYPASS)	56365	1	PAOZZ	B

NOTE * : NOT SHOWN

FIGURE AND INDEX NO.	REF DES	PART NUMBER	INDENT	DESCRIPTION	CAGE CODE	QTY PER ASSY	CODES SMR	CODES USABLE ON
51−34	61A105S2F1 61A105S2F2 61A105S2F3	FLNR200ID	4	FUSE, 200 AMP, CLASS RK5 (0E2J5) (ALT PN 10262)	75915	3	PAOZZ	B
51−35	61A5S3	H323N	3	100 AMP FUSED DISCONNECT (0E2J5) (ALT PN 22559)	56365	1	PAOZZ	D
51−36	61A5S3F1 61A5S3F2 61A5S3F3	WF1814/58−D5100	4	FUSE, 100 AMP (75915) (ALT PN FLN−R100) (0E2J5) (ALT PN 12379)	81348	3	PAOZZ	D
51−37		P092256−000002	2	STORAGE CABINET, DOUBLE DOOR (0E2J5) (ALT PN 11979)	34004	1	XB	
51−38		P092256−000001	2	STORAGE CABINET, SINGLE DOOR (0E2J5) (ALT PN 11978)	34004	2	XB	
51−39		P092256−000003	2	WORK BENCH (0E2J5) (ALT PN 11977)	34004	1	XB	
51−40	60MP5 *	2761K14	2	TOILET PAPER DISPENSER (0E2J5) (ALT PN 11976)	39428	1	PAOZZ	J
51−41	60MP6 *	2825K51	2	TOILET SEAT COVER DISPENSER (0E2J5) (ALT PN 11975)	39428	1	PAOZZ	J
51−42	60MP4 *	5601	2	DOOR HOLDER (0E2J5) (ALT PN 22371)	19220	3	PAOZZ	
51−43	60MP3 *	23345	2	LOCK SET (70019) (ALT PN 95K7E15CS3626)	0E2J5	1	PAOZZ	
51−44	60MP2 *	11050	2	PULL HANDLE (4K538) (ALT PN 10382000004)	0E2J5	3	PAOZZ	
51−45	60MP9 *	11058	2	LOCK GUARD (3M576) (ALT PN 1625)	0E2J5	3	PAOZZ	
51−46	60A10	801550−DR	2	HYDROGEN DETECTOR (0E2J5) (ALT PN 11990)	90660	1	PAODD	
51−47	60A10A1	HDSB−1	3	BOARD, SENSOR, HYDROGEN DETECTOR	0KYW6	1	PAOZZ	
51−48	60A11	AVP24ACA05 CD−1000	2	ENVIRONMENTAL CONTROL UNIT, 2 TON (TYPES 1, 2, 5, 6, & 9)	4R884	1	PBOLD	F
51−49	60A12	AVP36ACA05 CD−1000	2	ENVIRONMENTAL CONTROL UNIT, 3 TON (TYPES 4 & 7)	4R884	1	PBOLD	C
51−50	60A15	AVP24ACA05 CD−1000	2	ENVIRONMENTAL CONTROL UNIT W/COATED COILS	4R884	1	PBOLD	L
	NOTE * : NOT SHOWN							

FIGURE AND INDEX NO.	REF DES	PART NUMBER	INDENT	DESCRIPTION	CAGE CODE	QTY PER ASSY	CODES SMR	CODES USABLE ON
51−51	60A11MP1	80137	2	FILTER, ECU, 2 TON, PLEATED, 16X25X2 (TYPES 1, 2, 5, 6, & 9 − 2 TON)	4R884	1	PAOZZ	F
	60A12MP1	80138	2	FILTER, AC, (TYPES 4 & 7 − 3 TON)	4R884	1	PAOZZ	C
51−52	60A14	T874A1036Q674A1019	2	THERMOSTAT, AUTOCHANGE (0E2J5) (ALT PN 15901)	27319	1	PAOZZ	G
51−53	60A2A8	1C74−2	2	THERMOSTAT, SHUTDOWN (25795) (ALT PN 2E397)	65289	1	PAOZZ	
51−54	60A3A1	1C74−2	2	THERMOSTAT, OVERTEMP (25795) (ALT PN 2E397)	65289	1	PAOZZ	
51−55	62	P05003111001112	2	TPS (For breakdown see FIGURE 53 on Page 2 − 422)		1	PBODD	
51−56	63	BW050J141110001	2	BATTERY CABINET (For breakdown see FIGURE 61 on Page 2 − 440)	31795	1	PBODD	
51−57	65	101619986	2	SUPERVISORY CONTACT MODULE (For breakdown see FIGURE 62 on Page 2 − 442)	31795	1	PAODD	
51−58	64	MBM10312C121000	2	MAINTENANCE BYPASS MODULE (MBM) (For breakdown see FIGURE 56 on Page 2 − 430)	31795	1	PBODD	H
51−59	60A9 *	S19−690	2	EYE WASH STATION, PRESSURIZED	01055	1	PAOZZ	
51−60	60A9MP1 *	S19−350	3	WATER PRESERVATIVE	01055	1	PAOZZ	
51−61	60A9MP2 *	3JR69	3	AIR COMPRESSOR, 3/4 HP	02WA1	1	PAOZZ	
51−62	60A2A3	7C527	2	EXHAUST FAN (0E2J5) (ALT PN 13550)	1LXT3	1	PAOZZ	B
51−63	60A2A3A1	6K167	3	MOTOR, FAN, 1/4HP (0E2J5) (ALT PN 13222) (25795) (ALT PN 4K638C)	1LXT3	1	PAOZZ	B
51−64	60A2A5	IL35 18X48	2	18X48 INTAKE DAMPER (0E2J5) (ALT PN 22798)	34081	1	PAOZZ	B
51−65	60A2A5A1	MA-418-0-0-3	3	MOTOR LOUVER (0E2J5) (ALT PN 11985)	65149	1	PAOZZ	B
51−66	60A2A6	IL35 20X20	2	20X20 EXHAUST DAMPER (0E2J5) (ALT PN 22992)	34081	1	PAOZZ	B
51−67	60A2A6A1	MA-418-0-0−3	3	MOTOR LOUVER (0E2J5) (ALT PN 11985)	65149	1	PAOZZ	B
	NOTE * : NOT SHOWN							

FIGURE AND INDEX NO.	REF DES	PART NUMBER	INDENT	DESCRIPTION	CAGE CODE	QTY PER ASSY	CODES SMR	CODES USABLE ON
51−68	60A2A1	2E206	2	THERMOSTAT (EXH FAN) (0E2J5) (ALT PN 10877)	25795	1	PAOZZ	B
51−69	60A2A2	2E206	2	THERMOSTAT (LOUVER) (0E2J5) (ALT PN 10877)	25795	1	PAOZZ	B
51−70	60A13	EHB125NS	2	20CB NEMA ENCLOSURE	07442	1	PAOZZ	D
51−71	60A13CB1	EHB14020	3	20A, 1 POLE CIRCUIT BREAKER (0E2J5) (ALT PN 24019)	07442	1	PAOZZ	D

USABLE ON CODES

A − TPMS TYPES 1 AND 2
B − TPMS TYPE 3
C − TPMS TYPES 4 AND 7
D − TPMS TYPES 1, 2, 3, AND 4
E − TPMS TYPES 5, 6, AND 9
F − TPMS TYPES 1, 2, 5, 6, AND 9
G − TPMS TYPES 1, 2, 4, 5, 6, 7 AND 9
H − TPMS TYPES 5, 6, 7, 8, AND 9
J− TPMS TYPES 1, 4, 5, 7, AND 9
K− TPMS TYPES 1, 2, AND 4
L− ECU WITH COATED COILS

NOTE * : NOT SHOWN

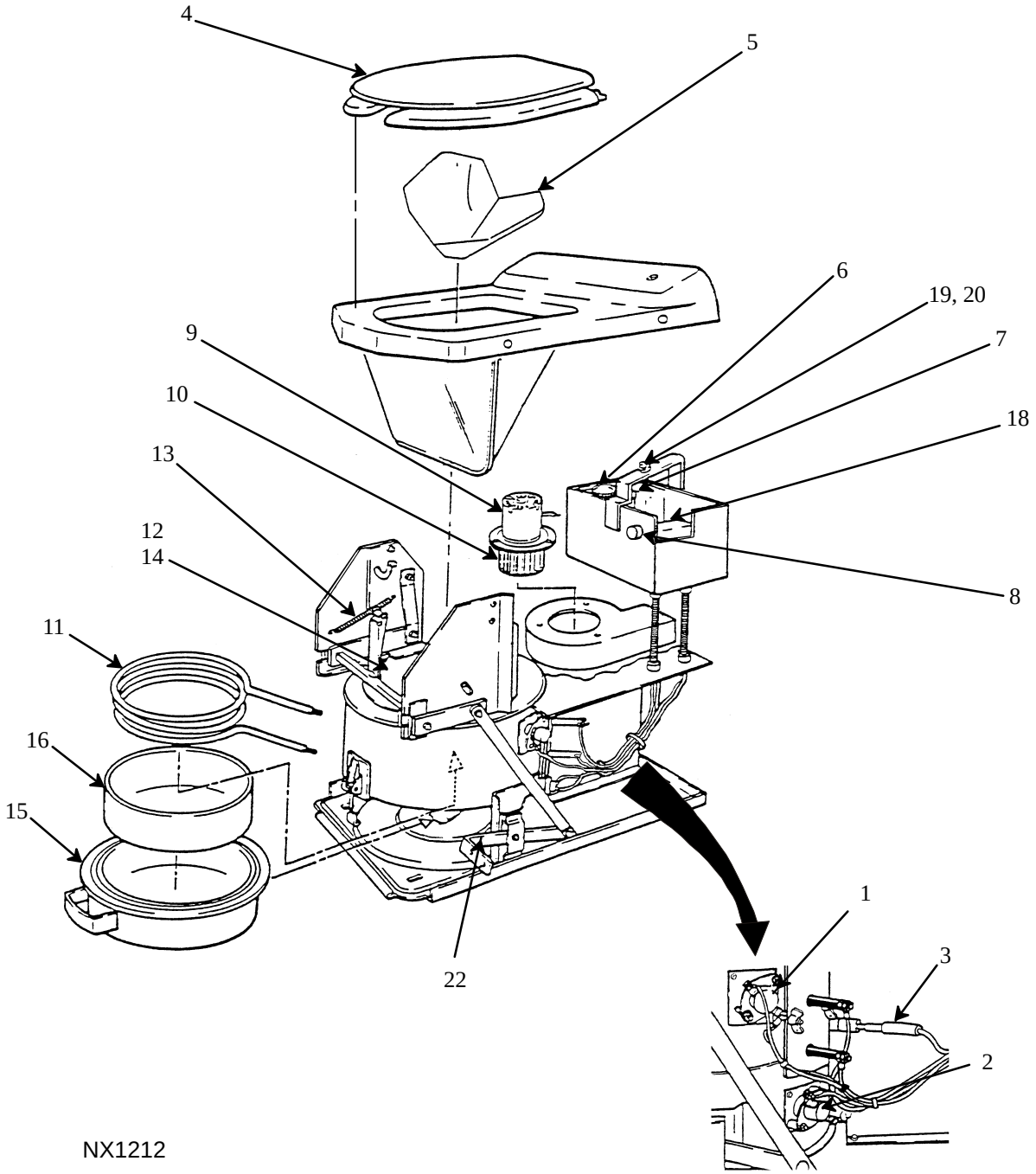

FIGURE 52. Electric Toilet, UD60A4

FIGURE AND INDEX NO.	REF DES	PART NUMBER	INDENT	DESCRIPTION	CAGE CODE	QTY PER ASSY	CODES SMR	CODES USABLE ON
52−	60A4	MODEL WB	1	ELECTRIC TOILET, 1800 WATTS, 120 V AC (0E2J5) (ALT PN 11974) (For NHA see FIGURE 51 on Page 2 − 407)	23989	REF	PBOOO	
52−1	60A4A1	THE014	2	ITS THERMOSTAT, BLOWER (0E2J5) (ALT PN THE014)	23989	1	PAOZZ	
52−2	60A4A2	THE012	2	TS THERMOSTAT, LIMIT (0E2J5) (ALT PN THE012)	23989	1	PAOZZ	
52−3	60A4A3	THE009	2	THERMOCOUPLE (0E2J5) (ALT PN THE009)	23989	1	PAOZZ	
52−4	60A4A4	SEA001	2	SEAT AND LID (0E2J5) (ALT PN SEA001)	23989	1	PAOZZ	
52−5	60A4MP4	LIN001	2	BOWL LINER (0E2J5) (ALT PN LIN001)	23989	1	PAOZZ	
52−6	60A4A7	CON017	2	TEMPERATURE CONTROLLER, 120 VOLT (0E2J5) (ALT PN CON017)	23989	1	PAOZZ	
52−7	60A4A8	TIM016	2	TIMER (0E2J5) (ALT PN TIM016)	23989	1	PAOZZ	
52−8	60A4A9	THE013	2	STS THERMOSTAT, SAFETY (0E2J5) (ALT PN THE013)	23989	1	PAOZZ	
52−9	60A4A10A1	MOT004	2	BLOWER MOTOR, 120 VOLT (0E2J5) (ALT PN MOT004)	23989	1	PAOZZ	
52−10	60A4A10A2	WHE001	3	BLOWER WHEEL (0E2J5) (ALT PN WHE001)	23989	1	PAOZZ	
52−11	60A4A11	HEA023	2	HEATER, 1.8 kW, 120 VOLT (0E2J5) (ALT PN HEA023)	23989	1	PAOZZ	
52−12	60A4A11A1	BRA009	3	BRACKET SET, HEATER (0E2J5) (ALT PN BRA009)	23989	1	PAOZZ	
52−13	60A4A12	SPR003	3	SPRING, HEATER, 1/4” DIA X 4” LONG (0E2J5) (ALT PN SPR003)	03007	2	PAOZZ	
52−14	60A4A13	LID006	2	LID, INCINERATOR (0E2J5) (ALT PN LID006)	23989	1	PAOZZ	
52−15	60A4A14	PAN022	2	ASHPAN (0E2J5) (ALT PN PAN022)	23989	1	PAOZZ	
52−16	60A4A14A1	PAN028	2	ASHPAN INSERT (0E2J5) (ALT PN PAN028)	23989	1	PAOZZ	
52−17	60A4MP5 *	CAT002	2	CATALYST, 2 LB PACKAGE (0E2J5) (ALT PN CAT002)	23989	1	PAOZZ	
52−18	60A4K1	REL007	2	RELAY, 120 VOLT (0E2J5) (ALT PN REL007)	23989	1	PAOZZ	
	NOTE * :	NOT SHOWN						

FIGURE AND INDEX NO.	REF DES	PART NUMBER	INDENT	DESCRIPTION	CAGE CODE	QTY PER ASSY	CODES	
							SMR	USABLE ON
52−19	60A4S1	SWI001	2	SWITCH, START (0E2J5) (ALT PN SWI001)	23989	1	PAOZZ	
52−20	60A4MP3	RUB001	3	RUBBER BOOT, START SWITCH	23989	1	PAOZZ	
52−21	60A4MP1 *	PFG001	2	GUARD, FOOT PEDAL ASSEMBLY	23989	1	PAOZZ	
52−22	60A4MP2	PED001	2	FOOT PEDAL ASSEMBLY	23989	1	PAOZZ	
	NOTE * : NOT SHOWN							

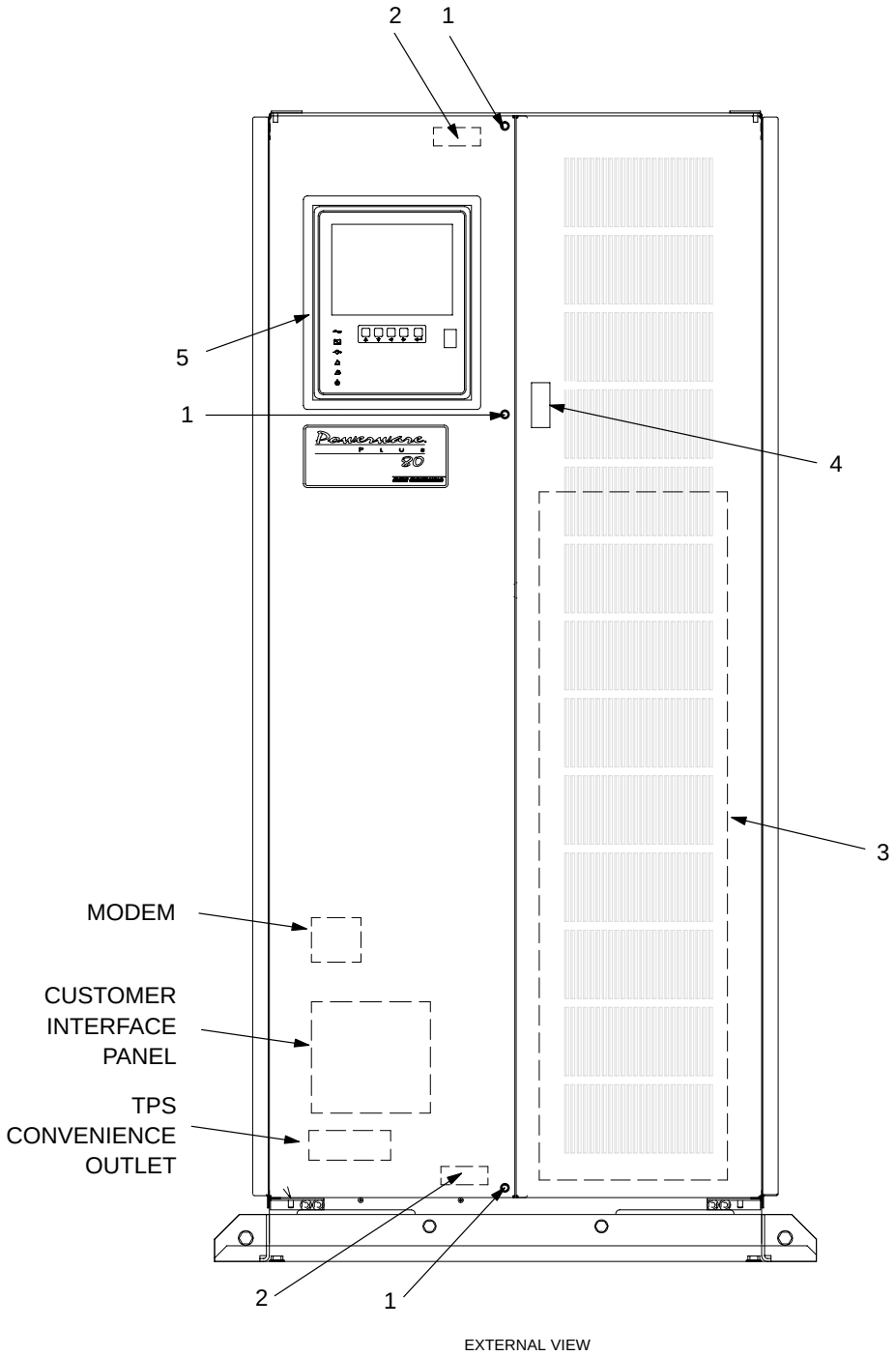

FIGURE 53. Powerware 9315−50 Cabinet, UD62

FIGURE AND INDEX NO.	REF DES	PART NUMBER	INDENT	DESCRIPTION	CAGE CODE	QTY PER ASSY	CODES	
							SMR	USABLE ON
53−	62	P05003111001112	1	TRANSITION POWER SUPPLY (TPS) (For NHA see FIGURE 51 on Page 2 − 407)	31795	REF	PBODD	
53−1	62MP1	5−32	2	BUMPER, RUBBER (32795) (ALT PN 129202025−007)	98893	3	PAOZZ	
53−2	62MP2	02−10−202−10	2	MAGNETIC CATCH (31795) (ALT PN 130913273)	94222	2	PAOZZ	
53−3	62MP3	220−500−051	2	FILTER, AIR, FIBERGLASS, 16X20X1 (31795) (ALT PN 151201035−001)	0UX52	2	PAOZZ	
53−4	62MP5	62−40−351−3	2	LATCH, LIFT & TURN (31795) (ALT PN 130913297−001)	94222 (31795)	1	PAOZZ	
53−5	62A5	101614841	2	MONITOR PANEL ASSEMBLY (For breakdown see FIGURE 60 on Page 2 − 438)	31795	1	XB	
53−6	*		2	CABINET DIVIDER (For breakdown see FIGURE 54 on Page 2 − 424)	31795	1	XB	
	NOTE * : NOT SHOWN							

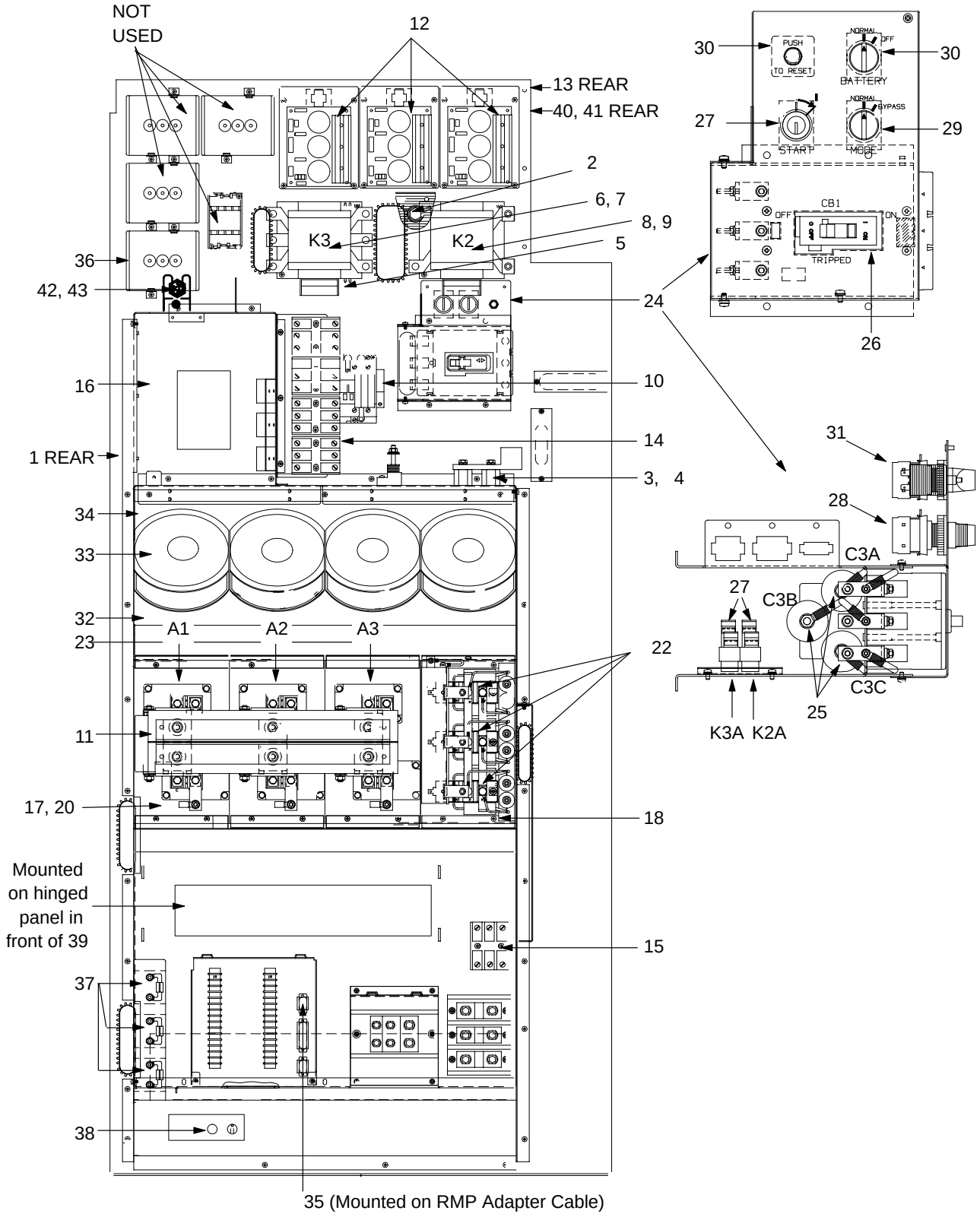

FIGURE 54. Cabinet Divider

FIGURE AND INDEX NO.	REF DES	PART NUMBER	INDENT	DESCRIPTION	CAGE CODE	QTY PER ASSY	CODES SMR	CODES USABLE ON
54−			1	CABINET DIVIDER (For NHA see FIGURE 53 on Page 2 − 422)	31795	REF		
54−1	62C5	CGS154TO35W5L3PH	2	CAPACITOR, ALUM (31795) (ALT PN 120104103−001)	0BE81	1	PAOZZ	
54−2	62DCCT1 62DCCT2	HTA400S/SP2/CE	2	TRANSFORMER, DCCT (18479) (ALT PN RSS−200SP1) (31795) (ALT PN 149502000−001)	0S2B6	2	PBOZZ	
54−3	62F61 62F62 62F63	LPJ−80SP	2	FUSE, TD 80A (31795) (ALT PN 128304128−003) (71424) (ALT PN AJT80)	71400	3	PAOZZ	
54−4	62E6MP1 62E7MP1 62E8MP1	2165−1A	2	STANDOFF, INSULATOR, 1/4−20 (31795) (ALT PN 132204002)	02329	2 2 2	PAOZZ	
54−5	62K	101614963	2	OUTPUT CONTACTOR ASSEMBLY	31795	1	XB	
54−6	62K3	EH145C−Y11	2	CONTACTOR,OUTPUT, 3−POLE (31795) (ALT PN 123109016−001)	32353	1	PAOZZ	
54−7	62K3CR1	152600425−001	2	DIODE ASSEMBLY, PWP50	31795	1	PAOZZ	
54−8	62K2	EH145C2P−Y	2	CONTACTOR, BATTERY, 2−POLE (31795) (ALT PN 123209032−001)	32353	1	PAOZZ	
54−9	62K2CR1	152600425−001	2	DIODE ASSEMBLY, PWP50, NOISE CANCELLATION	31795	1	PAOZZ	
54−10	62K4	AE75−30−11−81EX	2	CONTACTOR, BYPASS, 3−POLE 105A, 600VAC (31795) (ALT PN 123115013−001)	32353	1	PAOZZ	
54−11	62MP4	19413−8−0610	2	SPACER, BRASS, 13MM (31795) (ALT PN 130914108−209)	9W423	3	PAOZZ	
54−12	62PS1 62PS2 62PS3	101073073−001	2	PWB, DC POWER SUPPLY	31795	3	PAOZZ	
54−13	62PS1CPT1 62PS2CPT2 62PS3CPT3	E263−0601−5	2	TRANSFORMER, POWER (31795) (ALT PN 149108041−001)	024U5	3	PAOZZ	
54−14	62A2F1 THRU 62A2F10	KLKD 10	2	FUSE, 10A, TYPE K (31795) (ALT PN 128304038−053)	75915	10	PAOZZ	
54−15	62A2F13 62A2F14 62A2F15	KLKD 1	2	FUSE, 1A, TYPE K (31795) (ALT PN 128304038−045) (71424) (ALT PN ATM 1)	75915	3	PAOZZ	
	NOTE * :	NOT SHOWN						

FIGURE AND INDEX NO.	REF DES	PART NUMBER	INDENT	DESCRIPTION	CAGE CODE	QTY PER ASSY	CODES SMR	CODES USABLE ON
54−16	62A3	101614820	2	STATIC SWITCH MODULE (For breakdown see FIGURE 59 on Page 2 − 436)	31795	1	PAODD	
54−17	62A4	101614955	2	INVERTER/RECTIFIER ASSEMBLY	31795	1	XB	
54−18	62A4A1	101073074−001	3	RECTIFIER CONTROL, PWB	31795	1	PAOLD	
54−19	62A4A1MP1 *	275−160210−04	3	STANDOFF, PWB (31795) (ALT PN 132208047−001) (06915) (ALT PN RLCBSR1−4−01)	02768	10	PAOZZ	
54−20	62A4A2	101073072−001	3	INVERTER, CONTROL PWB	31795	1	PAOLD	
54−21	62A4A2MP1 *	275−160210−04	3	STANDOFF, PWB (31795) (ALT PN 132208047−001) (06915) (ALT PN RLCBSR1−4−01)	02768	6	PAOZZ	
54−22	62A9	101614810−002	2	RECTIFIER ASSEMBLY (For breakdown see FIGURE 58 on Page 2 − 434)	31795	1	PBODD	
54−23	62A8		2	INVERTER ASSEMBLY (For breakdown see FIGURE 57 on Page 2 − 432)	31795	1	XB	
54−24	62A6	103000833	2	CB1 PANEL ASSEMBLY	0CSN0	1	XB	
54−25	62A6C3A 62A6C3B 62A6C3C	EPS 20	3	CAPACITOR, 3.3UF (31795) (ALT PN 120519018−001)	84411	3	PAOZZ	
54−26	62A6CB1	53N100TB0A158	3	CKT BKR, 3−POLE (31795) (ALT PN 122160037−001)	32353	1	PAOZZ	
54−27	62A6K2A 62A6K3A	5542754	3	RELAY, 24VDC (31795) (ALT PN 140104161−001)	5Y407	2	PAOZZ	
54−28	62A6S1	CBK−S2KS120EX	3	SWITCH, KEYLOCK (31795) (ALT PN 145202083−001)	32353	1	PAOZZ	
54−29	62A6S3	CBK−22BMK11EX	3	SWITCH, MODE (31795) (ALT PN 145202084−001)	32353	1	PAOZZ	
54−30	62A6S4	CBK−2BMK−01EX	3	SWITCH, BATTERY (31795) (ALT PN 145202085−001)	32353	1	PAOZZ	
54−31	62A6S5	PR29−27567−1	3	SWITCH, PUSHBUTTON, 2P, 20A (31795) (ALT PN 122130089−001)	81541	1	PAOZZ	
54−32	62A7	101614807	2	FAN ASSEMBLY	31795	1	XB	
54−33	62A7B1 THRU 62A7B4	031512−JQ24KOX	2	FAN, 24VDC (31795) (ALT PN 151101056−001)	5Y921	4	PAOZZ	
54−34	62A7MP1	129201010−001	2	SHUTTER, 4 FAN	31795	1	XB	
	NOTE * :	NOT SHOWN						

FIGURE AND INDEX NO.	REF DES	PART NUMBER	INDENT	DESCRIPTION	CAGE CODE	QTY PER ASSY	CODES SMR	CODES USABLE ON
54−35	62A11A1F1	313001	2	1.0A, 250V FUSE, SLOBLO (31795) (ALT PN 128102003)	7E222	1	PAOZZ	
54−36	62C2	AMP0006D33SA	2	CAPACITOR, 3 PHASE, 8KVAR, 277V (31795) (ALT PN 120308037−001) (56699) (ALT PN 3186FH154T040AP)	00656	1	PAOZZ	
54−37	62CT1 62CT2 62CT3	3P85	2	TRANSFORMER, CT600 (31795) (ALT PN 149208341)	59138	3	PBOZZ	
54−38	62A1F1	MDL−2/10	2	FUSE, TD 0.2A (31795) (ALT PN 128103155−002)	71400	1	PAOZZ	
54−39	62A1	101614828	2	DC CAPACITOR PAN ASSEMBLY (For breakdown see FIGURE 55 on Page 2 − 428)	31795	1	PAODD	
54−40	62W3F1 *	313003	2	3A FUSE, SLOBLO	75915	1	PAOZZ	
54−41	62W3XF1	HKP	2	FUSE HOLDER (31795) (ALT PN 128402001)	71400	1	PAOZZ	
54−42	62F20	128102005	2	FUSE, F20, MDX3	31795	1	PAOZZ	
54−43	62XF20 *	HKP	2	FUSE HOLDER (31795) (ALT PN 128402001)	31795	1	PAOZZ	
	NOTE * : NOT SHOWN							

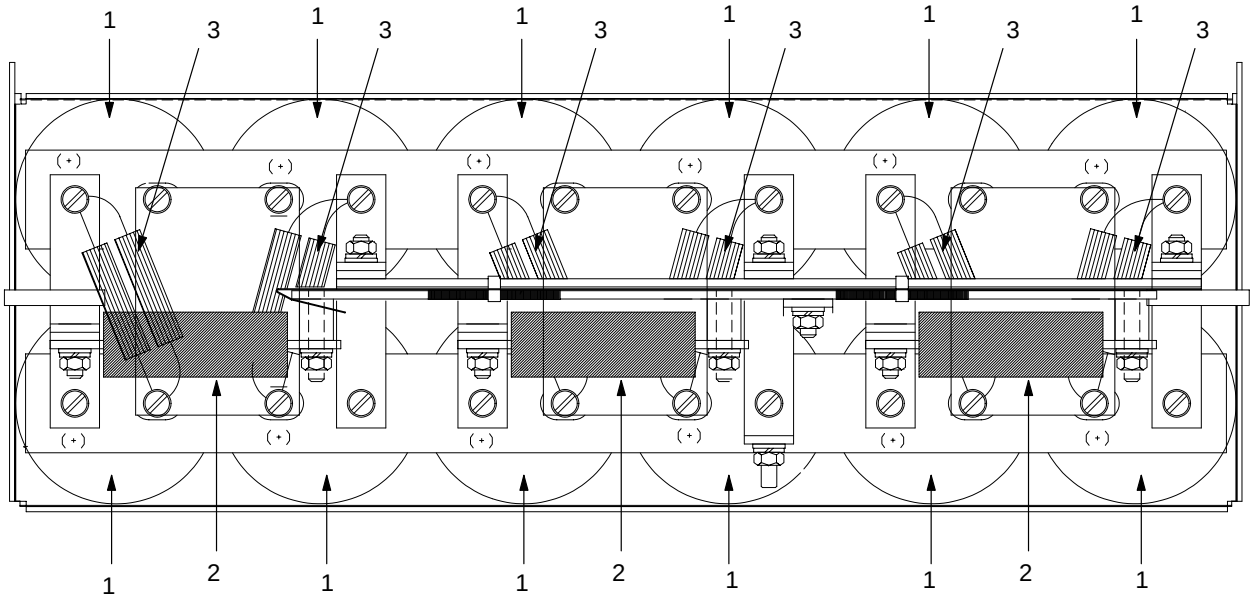

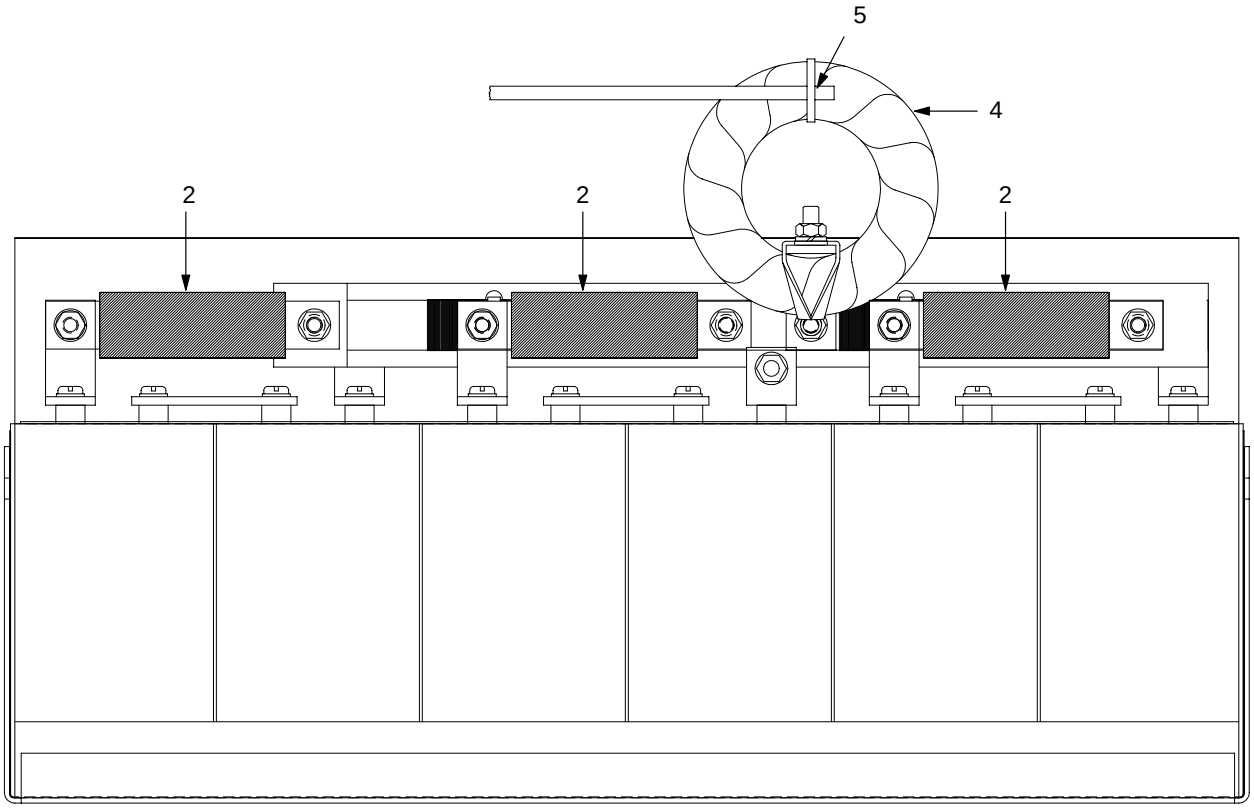

FIGURE 55. DC Capacitor Pan Assembly, UD62A1

FIGURE AND INDEX NO.	REF DES	PART NUMBER	INDENT	DESCRIPTION	CAGE CODE	QTY PER ASSY	CODES	
							SMR	USABLE ON
55−	62A1	101614828	1	DC CAPACITOR PAN ASSEMBLY (For NHA see FIGURE 54 on Page 2 − 424)	31795	REF	PAODD	
55−1	62A1C1 THRU 62A1C12	CGS442T300X5L3PH	2	CAPACITOR, ALUM (31795) (ALT PN 120111010)	0BE81	12	PAOZZ	
55−2	62A1F16 62A1F17 62A1F18	A60X70−4TI	2	FUSE, 70A (31795) (ALT PN 128304123)	71424	3	PAOZZ	
55−3	62A1R1 THRU 62A1R6	141931005−01	2	RESISTOR ASSEMBLY	31795	6	PAOZZ	
55−4	62A1W1	152507626	2	HARNESS, CT4	31795	1	PAOZZ	
55−5	62CT4	GS3TO15R0F150	2	RESISTOR ASSEMBLY, 6.81 (31795) (ALT PN 141931005−03)	11502	1	PAOZZ	

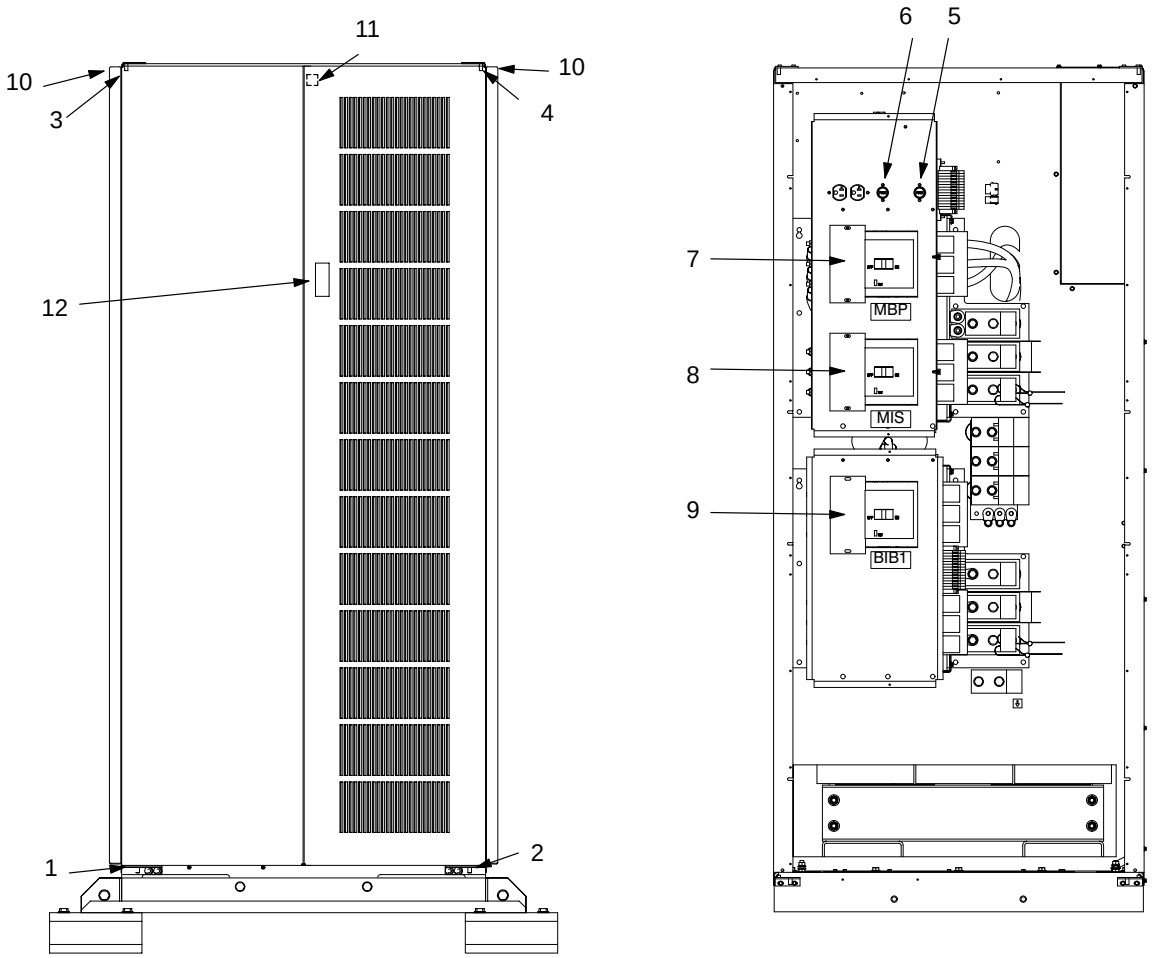

FIGURE 56. Maintenance Bypass Module, UD64

FIGURE AND INDEX NO.	REF DES	PART NUMBER	INDENT	DESCRIPTION	CAGE CODE	QTY PER ASSY	CODES	
							SMR	USABLE ON
56−	64	MBM10312C12100	1	MAINTENANCE BYPASS MODULE (For NHA see FIGURE 51 on Page 2 − 407)	31795	REF	PBDDD	
56−1	64MP1	157308676	2	HINGE, CABINET DOOR, BLH	31795	1	PAOZZ	
56−2	64MP2	157308677	2	HINGE, CABINET DOOR, BRH	31795	1	PAOZZ	
56−3	64MP3	157309761−001	2	HINGE, CABINET DOOR, TLH	31795	1	PAOZZ	
56−4	64MP4	157309761−002	2	HINGE, CABINET DOOR, TRH	31795	1	PAOZZ	
56−5	64A1F1	ATQ1−1/2	2	FUSE, 1.5A (31795) (ALT PN 128208001−012) (71400) (ALT PN FNQ1−1/2)	71424	1	PAOZZ	
56−6	64A1F2	ATQ10	2	FUSE, 10A (31795) (ALT PN 128208001−029) (71400) (ALT PN FNQ10)	71424	1	PAOZZ	
56−7	64CB2	S4HQ250BRRAS4	2	CIRCUIT BREAKER (MBP) (MBB) (31795) (ALT PN 122160023−002)	32353	1	PAOZZ	
56−8	64CB3	S4HQ250BRRAS4	2	CIRCUIT BREAKER (MIS) (UOB) (31795) (ALT PN 122160023−002)	32353	1	PAOZZ	
56−9	64CB1	S4HQ250BRRAS4	2	CIRCUIT BREAKER (BIB) (UIB) (31795) (ALT PN 122160023−002)	32353	1	PAOZZ	
56−10	64MP5	5−32	2	BUMPER, RUBBER (31795) (ALT PN 129202025−007)	98893	3	PAOZZ	
56−11	64MP6	02−10−202−10	2	MAGNETIC CATCH, PWP (31795) (ALT PN 130913273)	94222	1	PAOZZ	
56−12	64MP7	62−42−351−3	2	LATCH, LIFT & TURN (31795) (ALT PN 130913297−002)	94222	1	PAOZZ	

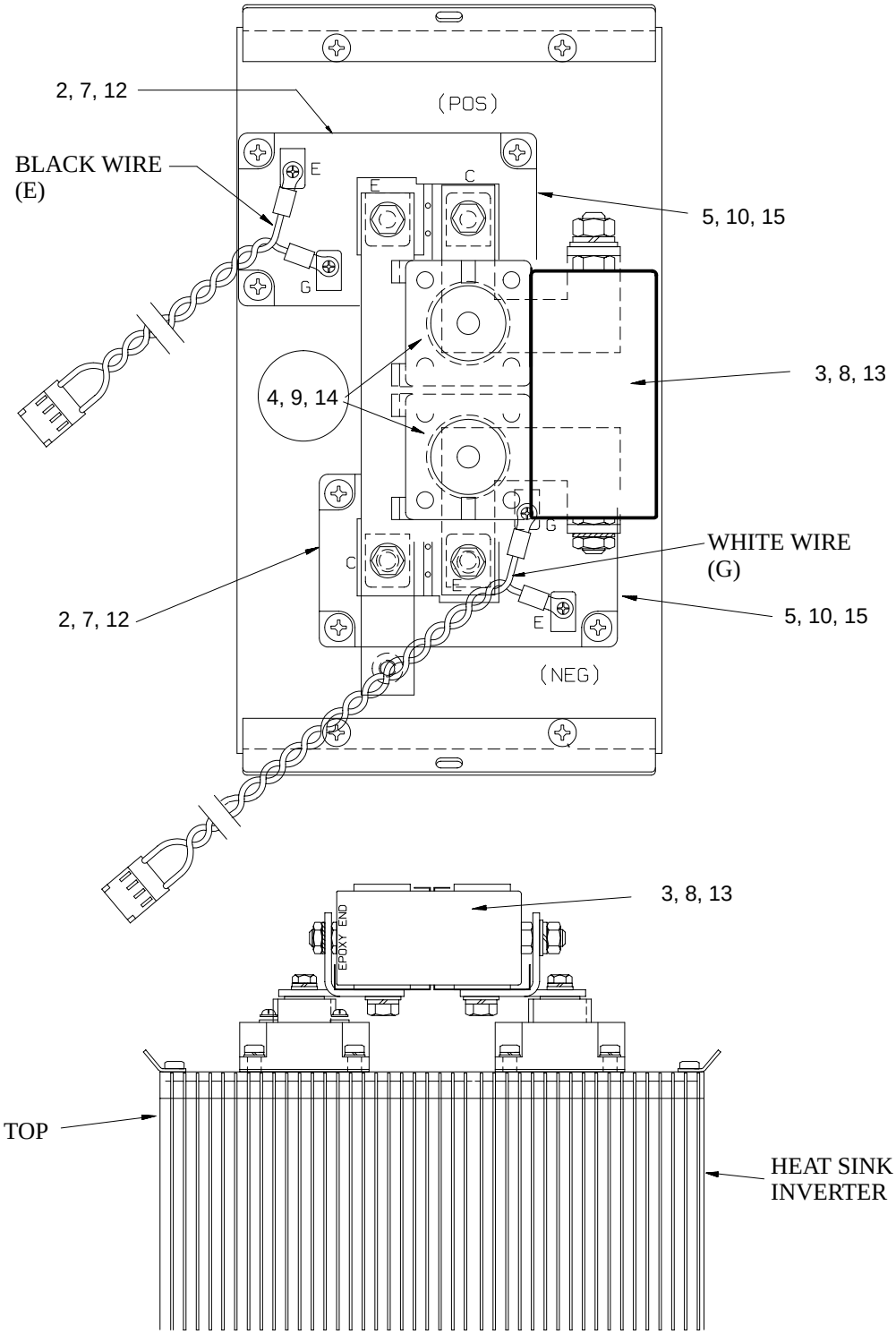

FIGURE 57. Inverter Assembly, UD62A8

FIGURE AND INDEX NO.	REF DES	PART NUMBER	INDENT	DESCRIPTION	CAGE CODE	QTY PER ASSY	CODES SMR	CODES USABLE ON
57−	62A8		1	INVERTER ASSEMBLY (For NHA see FIGURE 54 on Page 2 − 424)	31795	REF	XB	
57−1	62A8A1 **	101614945	2	INVERTER, LEG ASSEMBLY	31795	1	PAOZZ	
57−2	62A8A1MP1	AP−425−244	3	PAD, THERMAL INTERFACE (31795) (ALT PN 129101001−002)	0MR72	2	PAOZZ	
57−3	62A8A1C41	EPS 20	3	CAPACITOR, 3.3UF (31795) (ALT PN 120519018−001)	84411	1	PAOZZ	
57−4	62A8A1F41 62A8A1F42	170M3415	3	FUSE, 200A, 700VAC (31795) (ALT PN 128307025−001) (71424) (ALT PN 6.6URD30TTF0200)	71400	2	PAOZZ	
57−5	62A8A1Q41/Q42 *	CM300HA−24H	3	IGBT, 300A, 1200V (31795) (ALT PN 143224023−001)	66844	2	PAOZZ	
57−6	62A8A2 **	101614945	2	INVERTER, LEG ASSEMBLY	31795	1	PAOZZ	
57−7	62A8A2MP1	AP−425−244	3	PAD, THERMAL INTERFACE (31795) (ALT PN 129101001−002)	0MR72	2	PAOZZ	
57−8	62A8A2C42	EPS 20	3	CAPACITOR, 3.3UF (31795) (ALT PN 120519018−001)	84411	1	PAOZZ	
57−9	62A8A2F43 62A8A2F44	170M3415	3	FUSE, 200A, 700VAC (31795) (ALT PN 128307025−001) (71424) (ALT PN 6.6URD30TTF0200)	71400	2	PAOZZ	
57−10	62A8A2Q43/Q44 *	CM300HA−24H	3	IGBT, 300A, 1200V (31795) (ALT PN 143224023−001)	66844	2	PAOZZ	
57−11	62A8A3 **	101614945	2	INVERTER, LEG ASSEMBLY	31795	1	PAOZZ	
57−12	62A8A3MP1	AP−425−244	3	PAD, THERMAL INTERFACE (31795) (ALT PN 129101001−002)	0MR72	2	PAOZZ	
57−13	62A8A3C43	EPS 20	3	CAPACITOR, 3.3UF (31795) (ALT PN 120519018−001)	84411	1	PAOZZ	
57−14	62A8A3F45 62A8A3F46	170M3415	3	FUSE, 200A, 700VAC (31795) (ALT PN 128307025−001) (71424) (ALT PN 6.6URD30TTF0200)	71400	2	PAOZZ	
57−15	62A8A3Q45/Q46 *	CM300HA−24H	3	IGBT, 300A, 1200V (31795) (ALT PN 143224023−001)	66844	2	PAOZZ	

NOTE * : MUST BE ORDERED AS A MATCHED PAIR TO ENSURE LIKE VERSION OF GAIN CONTROL

NOTE ** : NOT SHOWN

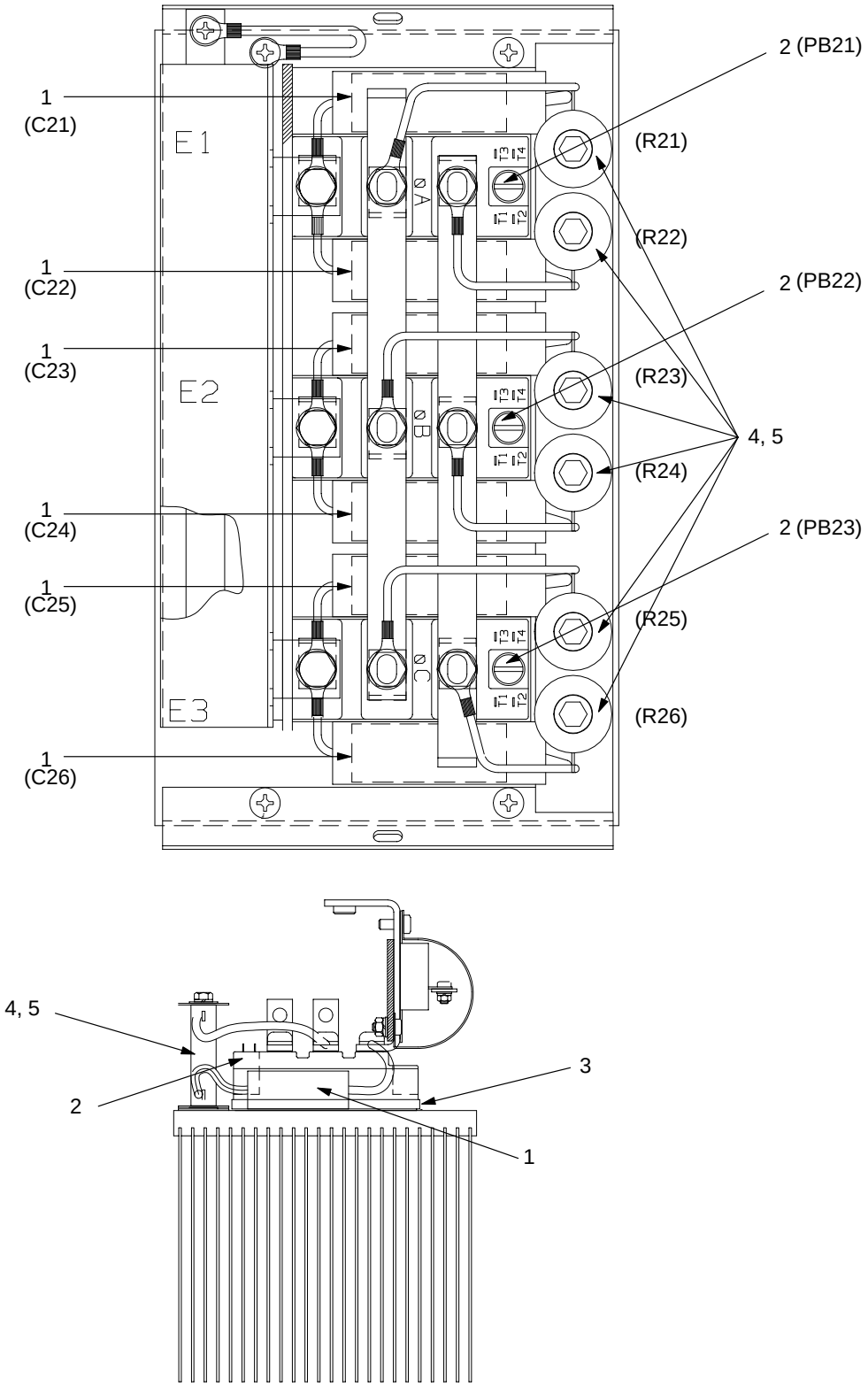

FIGURE 58. Rectifier Assembly, UD62A9

FIGURE AND INDEX NO.	REF DES	PART NUMBER	INDENT	DESCRIPTION	CAGE CODE	QTY PER ASSY	CODES	
							SMR	USABLE ON
58−	62A9	101614810−002	1	RECTIFIER ASSEMBLY (For NHA see FIGURE 54 on Page 2 − 424)	31795	REF	PBODD	
58−1	62A9C21 THRU 62A9C26	4MP−12698K	2	CAPACITOR, 0.2UF (31795) (ALT PN 120515017−001)	50588	6	PAOZZ	
58−2	62A9PB21 62A9PB22 62A9PB23	CD631615	2	SCR MODULE, DUAL (31795) (ALT PN 143318022) (0TSE6) (ALT PN TT142N16KOF)	66844	3	PAOZZ	
58−3	62A9PB21MP1 62A9PB22MP1 62A9PB23MP1	AP370−134	2	PAD, THERMAL INTERFACE (31795) (ALT PN 129101002−002)	0MR72	3	PAOZZ	
58−4	62A9R21 THRU 62A9R26	NHL−20	2	RESISTOR, 20 OHM (31795) (ALT PN 141713001) (82807) (ALT PN 7−32−20−NON)	91637	6	PAOZZ	
58−5	62A9R21MP1 THRU 62A9R26MP1	7PA25	2	HARDWARE, MOUNTING, RESISTOR (31795) (ALT PN 130103050) (82807) (ALT PN 11−203)	44655	6	PAOZZ	

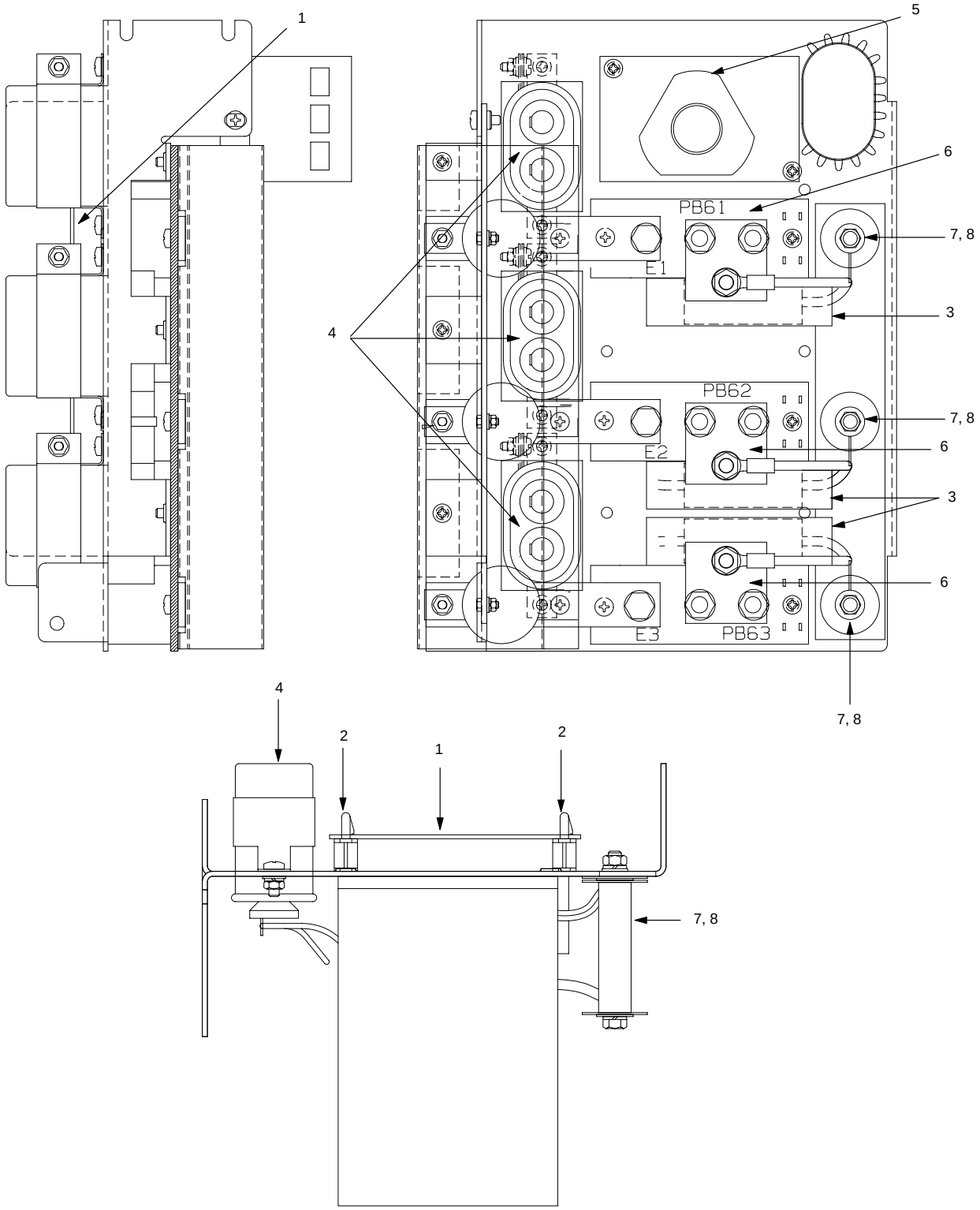

FIGURE 59. Static Switch Module, UD62A3

FIGURE AND INDEX NO.	REF DES	PART NUMBER	INDENT	DESCRIPTION	CAGE CODE	QTY PER ASSY	CODES	
							SMR	USABLE ON
59−	62A3	101614820	1	STATIC SWITCH MODULE (For NHA see FIGURE 54 on Page 2 − 424)	31795	REF	PAODD	
59−1	62A3A1	101073070−001	2	PCB, STATIC SWITCH BYPASS	31795	1	PAOLD	
59−2	62A3A1MP1	LCB5−8−19	2	PCB, SPACER, 0.50 (31795) (ALT PN 132208006)	06915	6	PAOZZ	
59−3	62A3C61 62A3C62 62A3C63	4MP−13104K	2	CAPACITOR, 0.047UF 660VAC (31795) (ALT PN 120515018−001)	50558	3	PAOZZ	
59−4	62A3C64 62A3C65 62A3C66	A28F5602	2	CAPACITOR, 0.25UF (31795) (ALT PN 120325001)	24446	3	PAOZZ	
59−5	62A3E1	9L15ECC001	2	SURGE ARRESTOR, 650V (31795) (ALT PN 141923173)	03538	1	PAOZZ	
59−6	62A3PB61 62A3PB62 62A3PB63	CD631615	2	SCR MODULE, DUAL (31795) (ALT PN 143318022) (0TSE6) (ALT PN TT142N16KOF)	66844	3	PAOZZ	
59−7	62A3R61 62A3R62 62A3R63	NHL−20	2	RESISTOR, 20 OHM (31795) (ALT PN 141713001) (82807) (ALT PN 7−32−20−NON)	91637	3	PAOZZ	
59−8	62A3R61MP1 62A3R62MP1 62A3R63MP1	7PA25	2	HARDWARE, MOUNTING, RESISTOR (31795) (ALT PN 130103050) (82807) (ALT PN 11−203)	44655	3	PAOZZ	

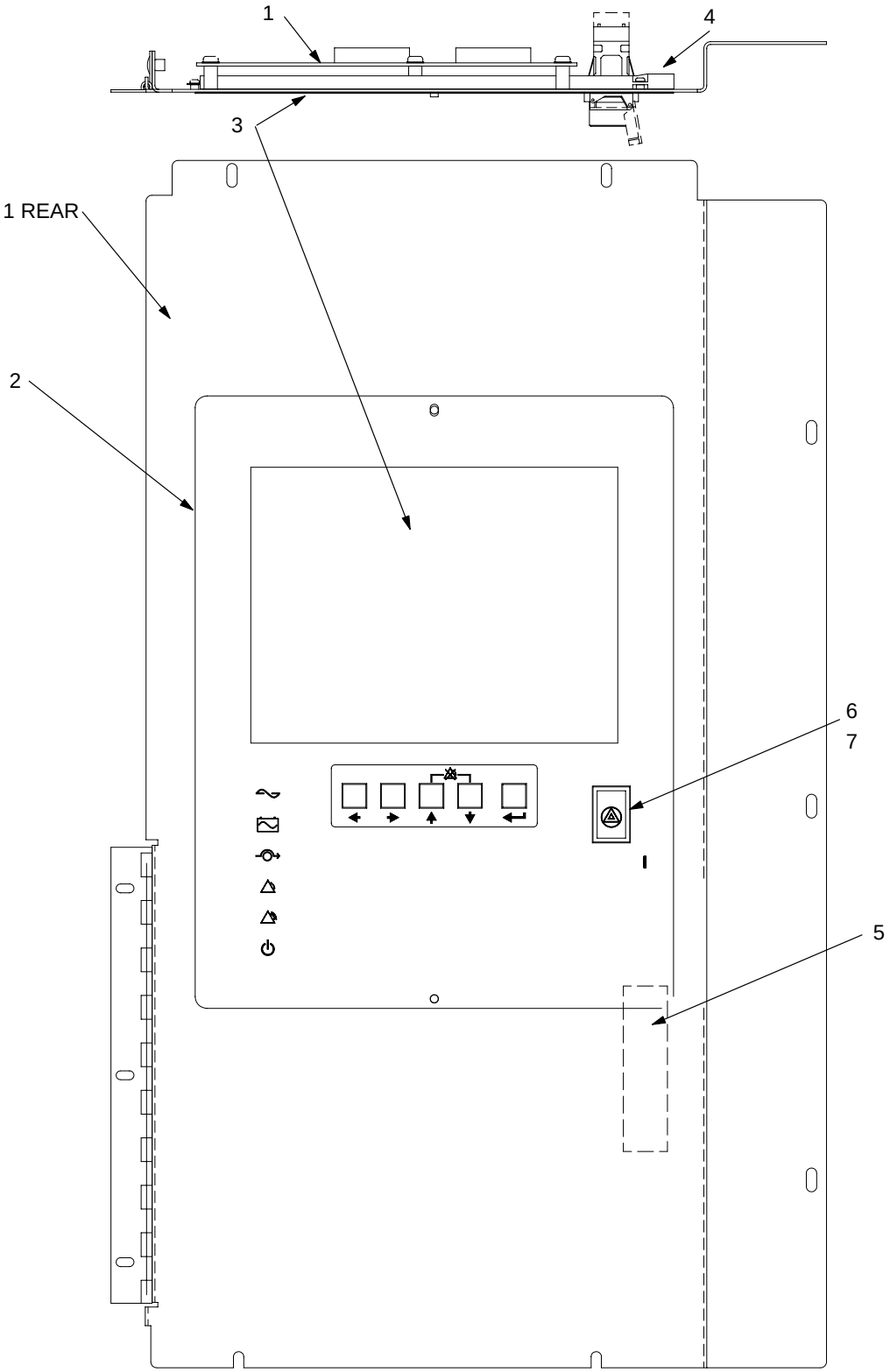

FIGURE 60. Monitor Panel Assembly, UD62A5

FIGURE AND INDEX NO.	REF DES	PART NUMBER	INDENT	DESCRIPTION	CAGE CODE	QTY PER ASSY	CODES	
							SMR	USABLE ON
60−	62A5	101614841	1	MONITOR PANEL ASSEMBLY (For NHA see FIGURE 53 on Page 2 − 422)	31795	REF	XB	
60−1	62A5A1	101073071−001	2	PWB, MONITOR	31795	1	PAOLD	
60−2	62A5A1MP1	127101668−001	2	DIFFUSER, LED MONITOR PANEL	31795	1	PAOZZ	
60−3	62A5A2	LM64P83L	2	DISPLAY, LCD (31795) (ALT PN 139311001−001)	0BDN7	1	PAOZZ	
60−4	62A5A2DS1	LFOM2840	3	LAMP, CCFT, LCD (31795) (ALT PN 139305015−001)	0BDN7	1	PAOZZ	
60−5	62A5A3	163901048−001	2	PWB, LCD	31795	1	PAOZZ	
60−6	62A5S2	AML21EBA2AC	2	SWITCH, PUSH−BUTTON (31795) (ALT PN 145301065−001)	91929	1	PAOZZ	
60−7	62A5S2MP1	AML51−F20R	3	LENS, “LOAD OFF”, RED (31795) (ALT PN 145301065−002)	91929	1	PAOZZ	

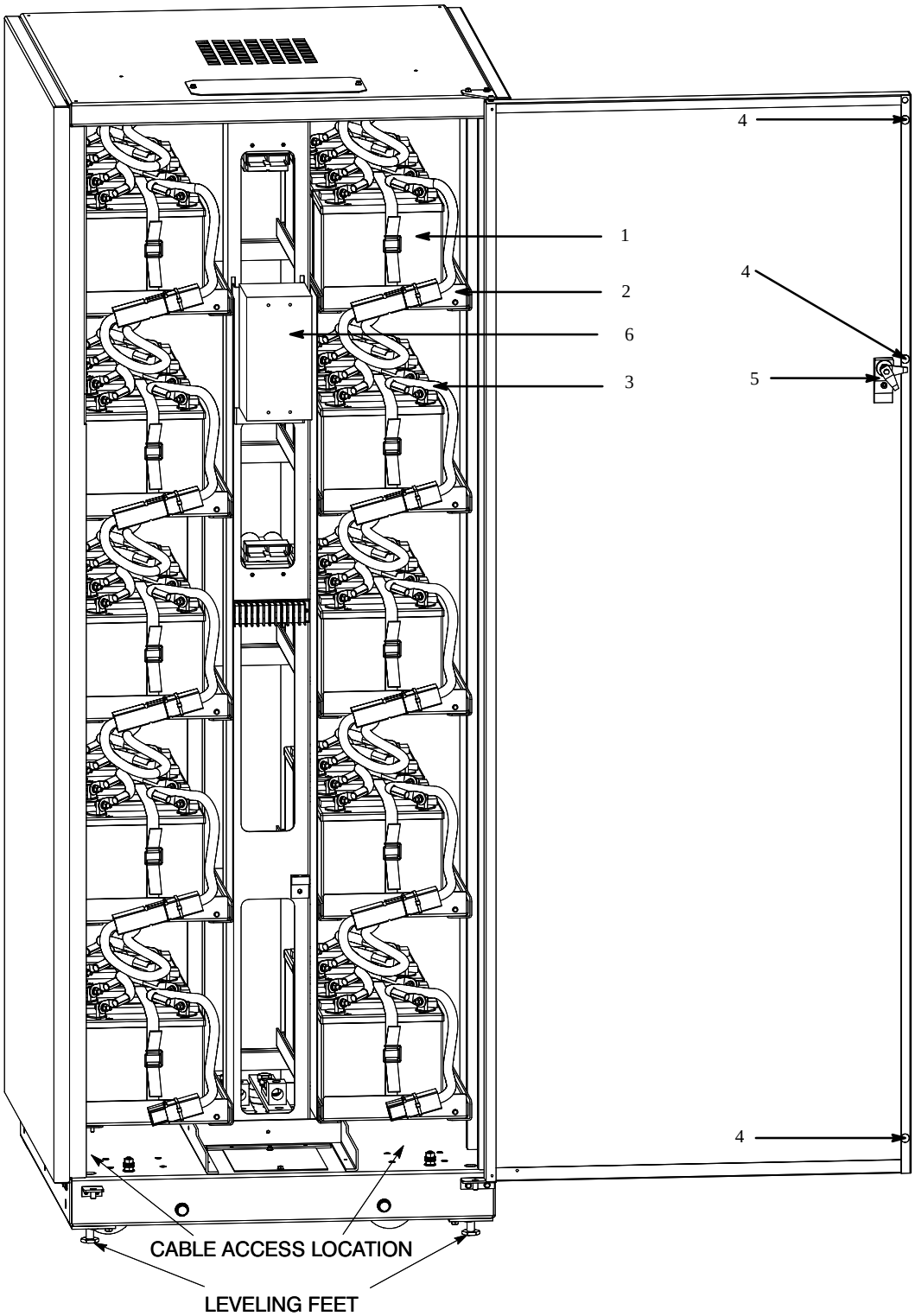

FIGURE 61. 685 Battery Cabinet, UD63

FIGURE AND INDEX NO.	REF DES	PART NUMBER	INDENT	DESCRIPTION	CAGE CODE	QTY PER ASSY	CODES	
							SMR	USABLE ON
61−	63	BWP5PJ141110001	1	685 BATTERY CABINET (For NHA see FIGURE 51 on Page 2 − 407)	31795	REF	XB	
61−1	63A2BT1 THRU 63A2BT40	UPS12−140FR	2	BATTERY, 12−140FR	32242	40	PCOZZ	
61−2	63A2MP1	157308581−001	2	TRAY, BATTERY MOUNT	31795	10	PAOZZ	
61−3	63A2W1	152508485−001	2	HARNESS, 480V, BATT	31795	10	PAOZZ	
61−4	63MP1	5−32	2	BUMPER, RUBBER (31795) (ALT PN 129202025−007)	98893	3	PAOZZ	
61−5	63MP2	62−42−351−3	2	LATCH, LIFT & TURN (31795) (ALT PN 130913297−002)	94222	1	PAOZZ	
61−6	63CB1	122160001−001	2	CIRCUIT BREAKER, 3 POLE	31795	1	XB	

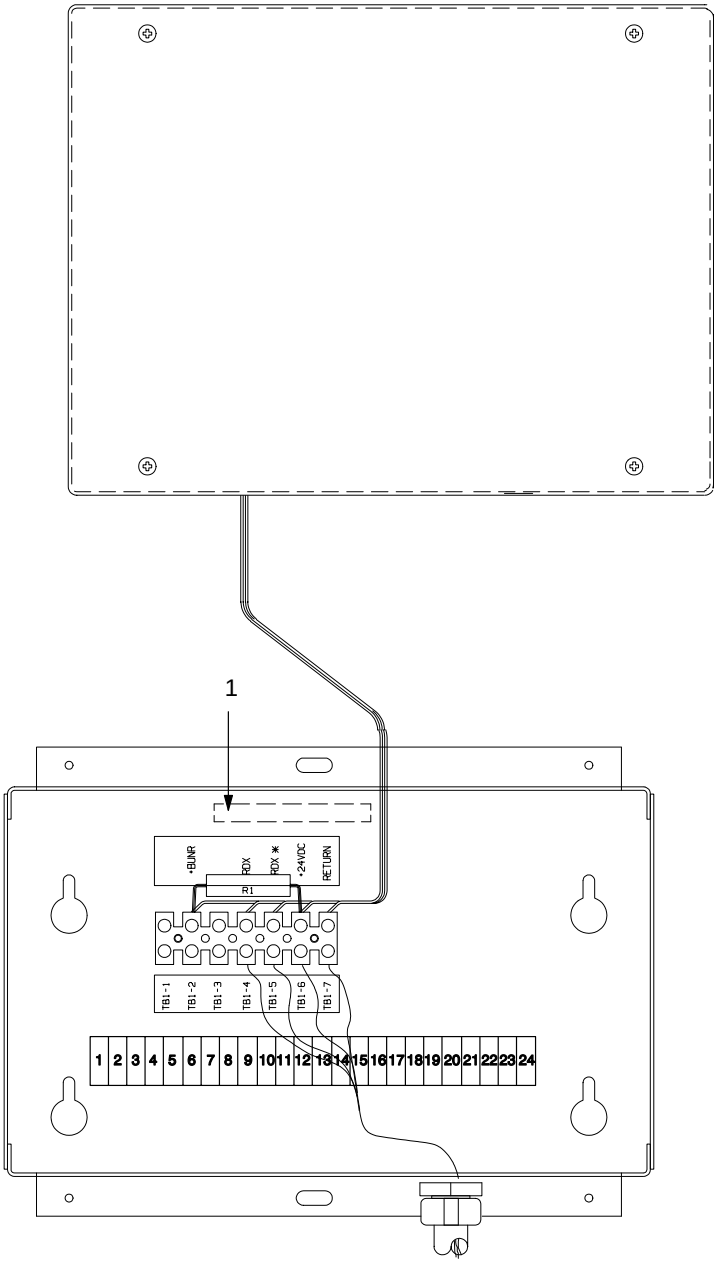

FIGURE 62. Supervisory Contact Module, UD65

Section II. Maintenance Parts List

FIGURE AND INDEX NO.	REF DES	PART NUMBER	INDENT	DESCRIPTION	CAGE CODE	QTY PER ASSY	CODES	
							SMR	USABLE ON
62−	65	101619986	1	SUPERVISORY CONTACT MODULE (SCM) (For NHA see FIGURE 51 on Page 2 − 407)	31795	REF	PAODD	
62−1	65R1	RCD135−40R0J	2	RESISTOR, 40 OHM (31795) (ALT PN 141111016)	56637	1	PAOZZ	

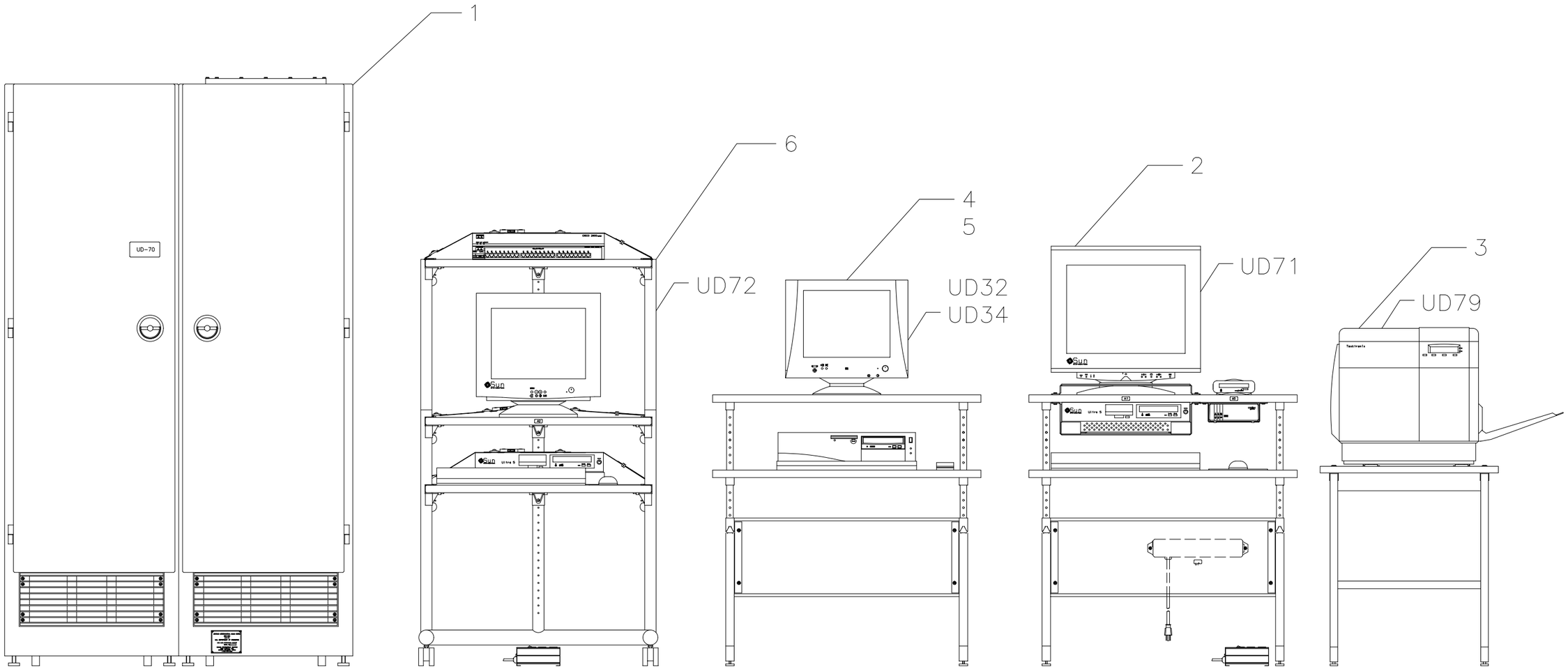

NX1501

FIGURE 63. RPG Group Assembly For UD70/170 (Sheet 1 of 5)

CABLE ASSEMBLIES (NOT SHOWN)

INDEX NO.	REF DES	FROM	TO	USABLE ON CODE
63−7	70/170E1−1	E1(7−/170E1−GND)		
63−8	W220−301	P1(TELCO)	P2(71A5 LEASE LINE)	
63−9	W221	P1(71A5DTE−A)	P2(71A1A1J3)	
63−10	W227−301	P1(71A5 LEASE LINE)	P2(71A7)	J
63−11	W228−301	P1(TELCO)	P2(71A7)	J
63−12	W328	P1(41J15)	P2(70/170J5)	
63−13	W328−1	P1(41J15)	P2(31J13)	F
63−14	W328−2	P1(41J15)	P2(70/170J5)	
63−15	W201	P1(70J1)	P2(LEASED LINES)	A, G
63−16	W202	P1(70J2)	P2(DIAL LINES)	A, G
63−17	W230	P1(70J3)	P2(DIAL LINE 2)	A, G
63−18	W44−304	P1(70J1)	P2(LEASED LINES)	B
63−19	W45	P1(70J2)	P2(DIAL LINES)	B
63−20	W46−309	P1(70J3)	P2(LEASED LINE 2)	B
63−21	W44	P1(31J14)	P2(TB2 LEASED LINES)	C, D
63−22	W45−308	P1(31J15)	P2(TB1−DIAL LINES)	C, D
63−23	W46	P1(31J16)	P2(TB4−LEASED LINES)	C, D
63−24	W201−3	P1(70J1)	P2(LEASED LINES)	A, G
63−25	W202−3	P1(70J2)	P2(DIAL LINES)	A, G
63−26	W230−2	P1(70J3)	P2(LEASED LINE 2)	A, G
63−27	W201−2	P1(70J1)	P2(LEASED LINES)	A, G
63−28	W202−2	P1(70J20)	P2(DIAL LINES)	A, G
63−29	W9/109	P1(70/170FL1J1)	P2(208VAC/3 PHASE)	B, C, D
63−30	W200	P1(70/170FL1J1)	P2(208VAC/3 PHASE)	A, E
63−31	W9/109−303	P1(70/170FL1J1)	P2(208VAC/3 PHASE)	
63−32	W218	P1(70J19)	N/A	
63−33	W216−1	P1(70J19)	A26	
63−34	W216−301	P1(70J19)	(A26LOAD)	
63−35	W216	P1(70J19)	(A26LOAD)	
63−36	W216−303	P1(70J19)	(A26LOAD)	
63−37	W331−304	P1(70 CP1)	P2(71A1A1J2<−−>)	A,E
63−38	W333−304	P1(71A1A1J2<−−>)	P2(79 A1 Ethernet)	A,E
63−39	W331−306	P1(70 CP1)	P2(71A1A1J2<−−>)	A,E
63−40	W333−306	P1(71A1A1J2<−−>)	P2(79 A1 Ethernet)	A,E

* SITE DEPENDENT

FIGURE 63. RPG Group Assembly For UD70/170 (Sheet 2 of 5)

CABLE ASSEMBLIES (NOT SHOWN)

INDEX NO.	REF DES	FROM	TO	USABLE ON CODE
63−41	W271−310	P1(74A2W0 T1)	P2(SITE TELCO)	B, C, D
63−42	W332−310	P1(70 CP10)	P2(79 A1 Ethernet)	A,E
63−43	W193	P1(120 Volts, 60 Hz)	P2(UD73 POWER)	
63−44	W194	P1(120 Volts, 60 Hz)	P2(UD74A1 POWER)	
63−45	W112−308	P1(TELCO J1)	P2(31 J25)	
63−46	W271	P1(UD74A2W0 T1)	P2(SITE TELCO)	
63−47	W272	P1(74A1 ETH0)	P2(73 3x)	
63−48	W273	P1(72A1A1J2<−−>)	P2(73 4x)	
63−49	W274	P1(72A1A2 PCI 1)	P2(73 12x)	
63−50	W332−308	P1(70 CP10)	P2(79 A1 Ethernet)	
63−51	W340−308	P1(70 CP6)	P2(AWIPS PT Port 3)	
63−52	W111	P1(70/170 CP7)	P2(Site TELCO WAN)	B
63−53	W112−309	P1(TELCO J1)	P2(31 J25)	C, D
63−54	W142	P1(70 CP7)	P2(31 J22)	C
63−55	W152	P1(170 CP7)	P2(31 J24)	D
63−56	W271−309	P1(74A2W0 T1)	P2(SITE TELCO)	B, C, D
63−57	W332−309	P1(70 CP10)	P2(79 A1 Ethernet)	A, E
63−58	W340−309	P1(70 CP6)	P2(AWIPS PT Port 3)	
63−59	W113	P1(70 CP8)	P2(170 CP8)	C, D
63−60	W114	P1(70 CP9)	P2(170 CP9)	D
63−61	W331−305	P1(70 CP1)	P2(71A1A1J2<−−>)	A, E
63−62	W333−305	P1(71A1A1J2<−−>)	P2(79 A1 Ethernet)	A, E
63−63	W271−310	P1(74A2W0 T1)	P2(SITE TELCO)	
63−64	W332−310	P1(70 CP10)	P2(79 A1 Ethernet)	
63−65	W340−310	P1(70 CP6)	P2(AWIPS PT Port 3)	
63−66	W271−311	P1(74A2W0 T1)	P2(SITE TELCO)	B, C, D
63−67	W332−311	P1(70 CP10)	P2(79 A1 Ethernet)	A, E
63−68	W340−311	P1(70 CP6)	P2(AWIPS PT Port 3)	
63−69	W331−307	P1(70 CP1)	P2(71A1A1J2<−−>)	A, E
63−70	W333−307	P1(71A1A1J2<−−>)	P2(79 A1 Ethernet)	A, E
63−71	W129	P1(120 Volts, 60 Hz)	P2(UD79 POWER)	
63−72	W200	P1(70/170FL1J1)	P2(208V/3 PHASE)	
63−73	W902	P1(CP2)	P2(71E1IN)	
63−74	W910−302	P1(71CP1)	P2(34A9A3TELCO)	

* SITE DEPENDENT

FIGURE 63. RPG Group Assembly For UD70/170 (Sheet 3 of 5)

CABLE ASSEMBLIES (NOT SHOWN)

INDEX NO.	REF DES	FROM	TO	USABLE ON CODE
63−75	W910−305	P1(71CP1)	P2(34A9A3TELCO)	
63−76	W910−306	P1(71CP1)	P2(34A9A3TELCO)	
63−77	W910−307	P1(71CP1)	P2(34A9A3TELCO)	
63−78	W95/195	P1(70/170J17)	P2(5/105J25)	B
63−79	W95/195−302	P1(70/170J17)	P2(5/105J25)	B
63−80	W162−301	P1(70J1)	P2(31J3)	D
63−81	W163−302	P1(70J2)	P2(31J4)	D
63−82	W164−303	P1(70J3)	P2(31J5)	D
63−83	W169−304	P1(170J1)	P2(31J8)	C
63−84	W170−305	P1(170J2)	P2(31J9)	C
63−85	W171−306	P1(170J3)	P2(31J10)	C
63−86	W162−1	P1(70J1)	P2(31J3)	H
63−87	W163−1	P1(70J2)	P2(31J4)	H
63−88	W169−1	P1(170J1)	P2(31J8)	H
63−89	W170−1	P1(170J2)	P2(31J9)	H
63−90	W169A	P1(170J1)	P2(31AJ14)	I
63−91	W170A	P1(170J2)	P2(31AJ15)	I
63−92	W171A	P1(170J3)	P2(31AJ16)	I
63−93	W166−301	P1(70J12)	P2(31J21)	D
63−94	W173−302	P1(170J12)	P2(31J23)	C
63−95	W166−1	P1(70J12)	P2(31J21)	
63−96	W173−1	P1(170J12)	P2(31J23)	
63−97	W173A	P1(170J12)	P2(A27J22)	
63−98	W166C	P1(70J12)	P2(A27J27)	
63−99	W168−301	P1(70J22)	P2(31J1)	D
63−100	W178−302	P1(170J22)	P2(31J2)	C
63−101	W168−1	P1(170J22)	P2(31J1)	
63−102	W178−1	P1(170J22)	P2(31J2)	
63−103	W250	P1(70J20)	P2(39J2)	
63−104	W251	P1(70J19)	P2(39J1)	
63−105	W221	P1(71A5DTE−A)	P2(71A1A1J3)	
63−106	W36/136−301	P1(70/170J19)	P2(5/105J11)	B, C, D
63−107	W281−302	P1(70J19)	P2(5J11)	
63−108	W36	P1(70J19)	P2(5J11)	

* SITE DEPENDENT

FIGURE 63. RPG Group Assembly For UD70/170 (Sheet 4 of 5)

CABLE ASSEMBLIES (NOT SHOWN)

INDEX NO.	REF DES	FROM	TO	USABLE ON CODE
63−109	W36−1	P1(70J19)	P2(5J11)	
63−110	W136A−2	P1(170J19)	P2(105J11)	
63−111	W136	P1(170J19)	P2(105J11)	
63−112	W136A−1	P1(170J19)	P2(A27J5)	
63−113	W36A	P1(70J19)	P2(A27J5)	
63−114	W36A−1	P1(70J19)	P2(A27J16)	
63−115	W167−302	P1(70J21)	P2(31J22)	
63−116	W177	P1(170J21)	P2(31J24)	
63−117	W226	P1(38J2)	P2(70J19)	
63−118	W177A	P1(170J21)	P2(31J25)	
63−119	W179	P1(70J5)	P2(31J19)	
63−120	W180	P1(170J5)	P2(31J20)	
63−121	W253	P1(70J20)	P2(70J19) (A26 LOAD)	
63−122	W905	P1(CP1)	P2(32E1)	G

* SITE DEPENDENT

FIGURE 63. RPG Group Assembly For UD70/170 (Sheet 5 of 5)

FIGURE AND INDEX NO.	REF DES	PART NUMBER	INDENT	DESCRIPTION	CAGE CODE	QTY PER ASSY	CODES SMR	CODES USABLE ON
63−		2300008−3XX	1	RPG GROUP ASSEMBLY	0WY55	REF	XB	
63−1	70/170 *	2300006−3XX	2	RPG PROCESSOR/ COMMUNICATIONS ASSEMBLY (For breakdown see FIGURE 64 on Page 2 − 457)	0WY55	1	XB	
63−2	71	2300023−3XX	2	MSCF WORKSTATION (For breakdown see FIGURE 67 on Page 2 − 481)	0WY55	1	XC	
63−3	79	2300024−301	2	PRINTER WORKSTATION (For breakdown see FIGURE 67 on Page 2 − 481)	0WY55	1	XC	
63−4	32	1214559−305	2	RRRAT EQUIPMENT (For breakdown see FIGURE 68 on Page 2 − 486)	0WY55	1	XC	G
63−5	34	1214559−313	2	RRRAT EQUIPMENT (For breakdown see FIGURE 68 on Page 2 − 486)	0WY55	1	XC	F
63−6	72	2300022−301	2	REMOTE BDDS WORKSTATION (For breakdown see FIGURE 70 on Page 2 − 492)	0WY55	1	XC	B C D
63−7	70/170E1−1 *	2320061−301	2	CABLE ASSEMBLY	0WY55	1	PAOZZ	
63−8	W220−301 *	2320075−301	2	CABLE ASSEMBLY, 612”	0WY55	1	PAOZZ	
63−9	W221 *	2320070−301	2	CABLE ASSEMBLY, 30”	0WY55	1	PAOZZ	
63−10	W227−301 *	2320071−301	2	CABLE ASSEMBLY, 72”	0WY55	1	PAOZZ	J
63−11	W228−301 *	2320077−301	2	CABLE ASSEMBLY, 600”	0WY55	1	PAOZZ	J
63−12	W328 * **	2320036−301	2	CABLE ASSEMBLY	0WY55	1	PAOZZ	
63−13	W328−1 *	2320036−302	2	CABLE ASSEMBLY, 600”	0WY55	1	PAOZZ	F
63−14	W328−2 *	2320036−303	2	CABLE ASSEMBLY, 600”	0WY55	1	PAOZZ	
63−15	W201 *	2320037−301	2	CABLE ASSEMBLY, 600”	0WY55	1	PAOZZ	A G
63−16	W202 *	2320037−302	2	CABLE ASSEMBLY, 600”	0WY55	1	PAOZZ	A G
63−17	W230 *	2320037−303	2	CABLE ASSEMBLY, 600”	0WY55	1	PAOZZ	A G
63−18	W44−304 *	2320037−304	2	CABLE ASSEMBLY, 275”	0WY55	1	PAOZZ	B
63−19	W45 *	2320037−305	2	CABLE ASSEMBLY, 260”	0WY55	1	PAOZZ	B
63−20	W46 *	2320037−306	2	CABLE ASSEMBLY, 285”	0WY55	1	PAOZZ	B

NOTE * : NOT SHOWN
NOTE ** : SITE DEPENDENT

FIGURE AND INDEX NO.	REF DES		PART NUMBER	INDENT	DESCRIPTION	CAGE CODE	QTY PER ASSY	CODES SMR	CODES USABLE ON
63−21	W44	*	2320037−307	2	CABLE ASSEMBLY, 232”	0WY55	1	PAOZZ	C D
63−22	W45−308	*	2320037−308	2	CABLE ASSEMBLY, 232”	0WY55	1	PAOZZ	C D
63−23	W46−309	*	2320037−309	2	CABLE ASSEMBLY, 232”	0WY55	1	PAOZZ	C D
63−24	W201−3	*	2320040−301	2	CABLE ASSEMBLY, 1200”	0WY55	1	PAOZZ	A G
63−25	W202−3	*	2320040−302	2	CABLE ASSEMBLY, 1200”	0WY55	1	PAOZZ	A G
63−26	W230−2	*	2320040−303	2	CABLE ASSEMBLY, 600”	0WY55	1	PAOZZ	A G
63−27	W201−2	*	2320040−304	2	CABLE ASSEMBLY, 600”	0WY55	1	PAOZZ	A G
63−28	W202−2	*	2320040−305	2	CABLE ASSEMBLY, 600”	0WY55	1	PAOZZ	A G
63−29	W9/109	*	2320041−301	2	CABLE ASSEMBLY, 94”	0WY55	1	PAOZZ	B C D
63−30	W200	*	2320041−302	2	CABLE ASSEMBLY, 600”	0WY55	1	PAOZZ	A E
63−31	W9/109−303	*	2320041−303	2	CABLE ASSEMBLY, 73”	0WY55	1	PAOZZ	
63−32	W218	*	2320045−301	2	CABLE ASSEMBLY	0WY55	1	PAOZZ	
63−33	W216−1	*	2320045−302	2	CABLE ASSEMBLY	0WY55	1	PAOZZ	
63−34	W216−301	*	2320046−301	2	CABLE ASSEMBLY, 612”	0WY55	1	PAOZZ	
63−35	W216	*	2320046−302	2	CABLE ASSEMBLY, 660”	0WY55	1	PAOZZ	
63−36	W216−303	*	2320046−303	2	CABLE ASSEMBLY, 1200”	0WY55	1	PAOZZ	
63−37	W331−304	*	2320047−304	2	CABLE ASSEMBLY	0WY55	1	PAOZZ	A E
63−38	W333−304	*	2320047−304	2	CABLE ASSEMBLY	0WY55	1	PAOZZ	A E
63−39	W331−306	*	2320047−306	2	CABLE ASSEMBLY	0WY55	1	PAOZZ	A E
63−40	W333−306	*	2320047−306	2	CABLE ASSEMBLY	0WY55	1	PAOZZ	A E
63−41	W271−310	*	2320047−310	2	CABLE ASSEMBLY	0WY55	1	PAOZZ	B C D
63−42	W332−310	*	2320047−310	2	CABLE ASSEMBLY	0WY55	1	PAOZZ	A E

NOTE * : NOT SHOWN
NOTE ** : SITE DEPENDENT

FIGURE AND INDEX NO.	REF DES	PART NUMBER	INDENT	DESCRIPTION	CAGE CODE	QTY PER ASSY	CODES SMR	CODES USABLE ON
63−43	W193 *	2320049−303	2	CABLE ASSEMBLY	0WY55	1	PAOZZ	
63−44	W194 *	2320049−303	2	CABLE ASSEMBLY	0WY55	1	PAOZZ	
63−45	W112−308 *	2320047−308	2	CABLE ASSEMBLY	0WY55	1	PAOZZ	
63−46	W271 *	2320047−308	2	CABLE ASSEMBLY	0WY55	1	PAOZZ	
63−47	W272 *	2320047−308	2	CABLE ASSEMBLY	0WY55	1	PAOZZ	
63−48	W273 *	2320047−308	2	CABLE ASSEMBLY	0WY55	1	PAOZZ	
63−49	W274 *	2320047−308	2	CABLE ASSEMBLY	0WY55	1	PAOZZ	
63−50	W332−308 *	2320047−308	2	CABLE ASSEMBLY	0WY55	1	PAOZZ	
63−51	W340−308 *	2320047−308	2	CABLE ASSEMBLY	0WY55	1	PAOZZ	
63−52	W111 *	2320047−309	2	CABLE ASSEMBLY	0WY55	1	PAOZZ	B
63−53	W112−309 *	2320047−309	2	CABLE ASSEMBLY	0WY55	1	PAOZZ	C D
63−54	W142 *	2320047−309	2	CABLE ASSEMBLY	0WY55	1	PAOZZ	C
63−55	W152 *	2320047−309	2	CABLE ASSEMBLY	0WY55	1	PAOZZ	D
63−56	W271−309 *	2320047−309	2	CABLE ASSEMBLY	0WY55	1	PAOZZ	B C D
63−57	W332−309 *	2320047−309	2	CABLE ASSEMBLY	0WY55	1	PAOZZ	A E
63−58	W340−309 *	2320047−309	2	CABLE ASSEMBLY	0WY55	1	PAOZZ	
63−59	W113 *	2320047−305	2	CABLE ASSEMBLY	0WY55	1	PAOZZ	C D
63−60	W114 *	2320047−305	2	CABLE ASSEMBLY	0WY55	1	PAOZZ	D
63−61	W331−305 *	2320047−305	2	CABLE ASSEMBLY	0WY55	1	PAOZZ	A E
63−62	W333−305 *	2320047−305	2	CABLE ASSEMBLY	0WY55	1	PAOZZ	A E
63−63	W271−310 *	2320047−310	2	CABLE ASSEMBLY	0WY55	1	PAOZZ	
63−64	W332−310 *	2320047−310	2	CABLE ASSEMBLY	0WY55	1	PAOZZ	
63−65	W340−310 *	2320047−310	2	CABLE ASSEMBLY	0WY55	1	PAOZZ	
63−66	W271−311 *	2320047−311	2	CABLE ASSEMBLY	0WY55	1	PAOZZ	B C D
63−67	W332−311 *	2320047−311	2	CABLE ASSEMBLY	0WY55	1	PAOZZ	A E
63−68	W340−311 *	2320047−311	2	CABLE ASSEMBLY	0WY55	1	PAOZZ	
63−69	W331−307 *	2320047−307	2	CABLE ASSEMBLY	0WY55	1	PAOZZ	A E

NOTE * : NOT SHOWN
NOTE ** : SITE DEPENDENT

FIGURE AND INDEX NO.	REF DES		PART NUMBER	INDENT	DESCRIPTION	CAGE CODE	QTY PER ASSY	CODES SMR	CODES USABLE ON
63−70	W333−307	*	2320047−307	2	CABLE ASSEMBLY	0WY55	1	PAOZZ	A E
63−71	W129	*	2320049−303	2	CABLE ASSEMBLY	0WY55	1	PAOZZ	
63−72	W200	*	2320055−301	2	CABLE ASSEMBLY, 600”	0WY55	1	PAOZZ	
63−73	W902	*	2320062−301	2	CABLE ASSEMBLY, 300”	0WY55	1	PAOZZ	
63−74	W910−302	*	2320062−302	2	CABLE ASSEMBLY, 120”	0WY55	1	PAOZZ	
63−75	W910−305	*	2320062−305	2	CABLE ASSEMBLY, 600”	0WY55	1	PAOZZ	
63−76	W910−306	*	2320062−306	2	CABLE ASSEMBLY, 1200”	0WY55	1	PAOZZ	
63−77	W910−307	*	2320062−307	2	CABLE ASSEMBLY, 3600”	0WY55	1	PAOZZ	
63−78	W95/195	*	2320063−301	2	CABLE ASSEMBLY, 300”	0WY55	1	PAOZZ	B
63−79	W95/195−302	*	2320063−302	2	CABLE ASSEMBLY, 390”	0WY55	1	PAOZZ	B
63−80	W162−301	*	2320064−301	2	CABLE ASSEMBLY, 520”	0WY55	1	PAOZZ	D
63−81	W163−302	*	2320064−302	2	CABLE ASSEMBLY, 520”	0WY55	1	PAOZZ	D
63−82	W164−303	*	2320064−303	2	CABLE ASSEMBLY, 436”	0WY55	1	PAOZZ	D
63−83	W169−304	*	2320064−304	2	CABLE ASSEMBLY, 397”	0WY55	1	PAOZZ	C
63−84	W170−305	*	2320064−305	2	CABLE ASSEMBLY, 397”	0WY55	1	PAOZZ	C
63−85	W171−306	*	2320064−306	2	CABLE ASSEMBLY, 316”	0WY55	1	PAOZZ	C
63−86	W162−1	*	2320064−307	2	CABLE ASSEMBLY, 834”	0WY55	1	PAOZZ	H
63−87	W163−1	*	2320064−308	2	CABLE ASSEMBLY, 834”	0WY55	1	PAOZZ	H
63−88	W169−1	*	2320064−309	2	CABLE ASSEMBLY, 468”	0WY55	1	PAOZZ	H
63−89	W170−1	*	2320064−310	2	CABLE ASSEMBLY, 468”	0WY55	1	PAOZZ	H
63−90	W169A	*	2320064−311	2	CABLE ASSEMBLY, 397”	0WY55	1	PAOZZ	I
63−91	W170A	*	2320064−312	2	CABLE ASSEMBLY, 397”	0WY55	1	PAOZZ	I
63−92	W171A	*	2320064−313	2	CABLE ASSEMBLY, 397”	0WY55	1	PAOZZ	I
63−93	W166−301	*	2320065−301	2	CABLE ASSEMBLY, 520”	0WY55	1	PAOZZ	D
63−94	W173−302	*	2320065−302	2	CABLE ASSEMBLY, 397”	0WY55	1	PAOZZ	C
63−95	W166−1	*	2320065−303	2	CABLE ASSEMBLY, 834”	0WY55	1	PAOZZ	
63−96	W173−1	*	2320065−304	2	CABLE ASSEMBLY, 468”	0WY55	1	PAOZZ	
63−97	W173A	*	2320065−305	2	CABLE ASSEMBLY, 300”	0WY55	1	PAOZZ	
63−98	W166C	*	2320065−306	2	CABLE ASSEMBLY, 340”	0WY55	1	PAOZZ	
63−99	W168−301	*	2320066−301	2	CABLE ASSEMBLY, 520”	0WY55	1	PAOZZ	D
63−100	W178−302	*	2320066−302	2	CABLE ASSEMBLY, 397”	0WY55	1	PAOZZ	C
63−101	W168−1	*	2320066−303	2	CABLE ASSEMBLY, 834”	0WY55	1	PAOZZ	
63−102	W178−1	*	2320066−304	2	CABLE ASSEMBLY, 468”	0WY55	1	PAOZZ	
63−103	W250	*	2320067−301	2	CABLE ASSEMBLY, 618”	0WY55	1	PAOZZ	

NOTE * : NOT SHOWN
NOTE ** : SITE DEPENDENT

FIGURE AND INDEX NO.	REF DES	PART NUMBER	INDENT	DESCRIPTION	CAGE CODE	QTY PER ASSY	CODES SMR	CODES USABLE ON
63−104	W251 *	2320068−301	2	CABLE ASSEMBLY, 618”	0WY55	1	PAOZZ	
63−105	W221 *	2320070−301	2	CABLE ASSEMBLY, 30”	0WY55	1	PAOZZ	
63−106	W36/136−301 *	2320072−301	2	CABLE ASSEMBLY, 240”	0WY55	1	PAOZZ	B C D
63−107	W281−302 *	2320072−302	2	CABLE ASSEMBLY, 3937”	0WY55	1	PAOZZ	
63−108	W36 *	2320072−303	2	CABLE ASSEMBLY, 297”	0WY55	1	PAOZZ	
63−109	W36−1 *	2320072−304	2	CABLE ASSEMBLY, 369”	0WY55	1	PAOZZ	
63−110	W136A−2 *	2320072−305	2	CABLE ASSEMBLY, 311”	0WY55	1	PAOZZ	
63−111	W136 *	2320072−306	2	CABLE ASSEMBLY, 2730”	0WY55	1	PAOZZ	
63−112	W136A−1 *	2320072−307	2	CABLE ASSEMBLY, 240”	0WY55	1	PAOZZ	
63−113	W36A *	2320073−301	2	CABLE ASSEMBLY, 420”	0WY55	1	PAOZZ	
63−114	W36A−1 *	2320074−301	2	CABLE ASSEMBLY, 320”	0WY55	1	PAOZZ	
63−115	W167−302 *	2320074−302	2	CABLE ASSEMBLY, 846”	0WY55	1	PAOZZ	
63−116	W177 *	2320074−303	2	CABLE ASSEMBLY, 480”	0WY55	1	PAOZZ	
63−117	W226 *	2320074−304	2	CABLE ASSEMBLY, 360”	0WY55	1	PAOZZ	
63−118	W177A *	2320074−305	2	CABLE ASSEMBLY, 320”	0WY55	1	PAOZZ	
63−119	W179 *	2320076−301	2	CABLE ASSEMBLY, 834”	0WY55	1	PAOZZ	
63−120	W180 *	2320076−302	2	CABLE ASSEMBLY, 468”	0WY55	1	PAOZZ	
63−121	W253 *	2320087−301	2	CABLE ASSEMBLY, 600”	0WY55	1	PAOZZ	
63−122	W905 *	2320002−305	2	CABLE ASSEMBLY, 300”	0WY55	1	PAOZZ	G

USABLE ON CODES

A − NWS SINGLE CHANNEL
B − RPG DOD
C − RPG FAA #1
D − RPG FAA #2
E − MLOS SITES ONLY
F − DOD AND NWS SINGLE CHANNEL
G − NWS REDUNDANT
H − NRC−BANNISTER
I − ROC (KCRI)
J − DISTANT MSCF

NOTE * : NOT SHOWN
NOTE ** : SITE DEPENDENT

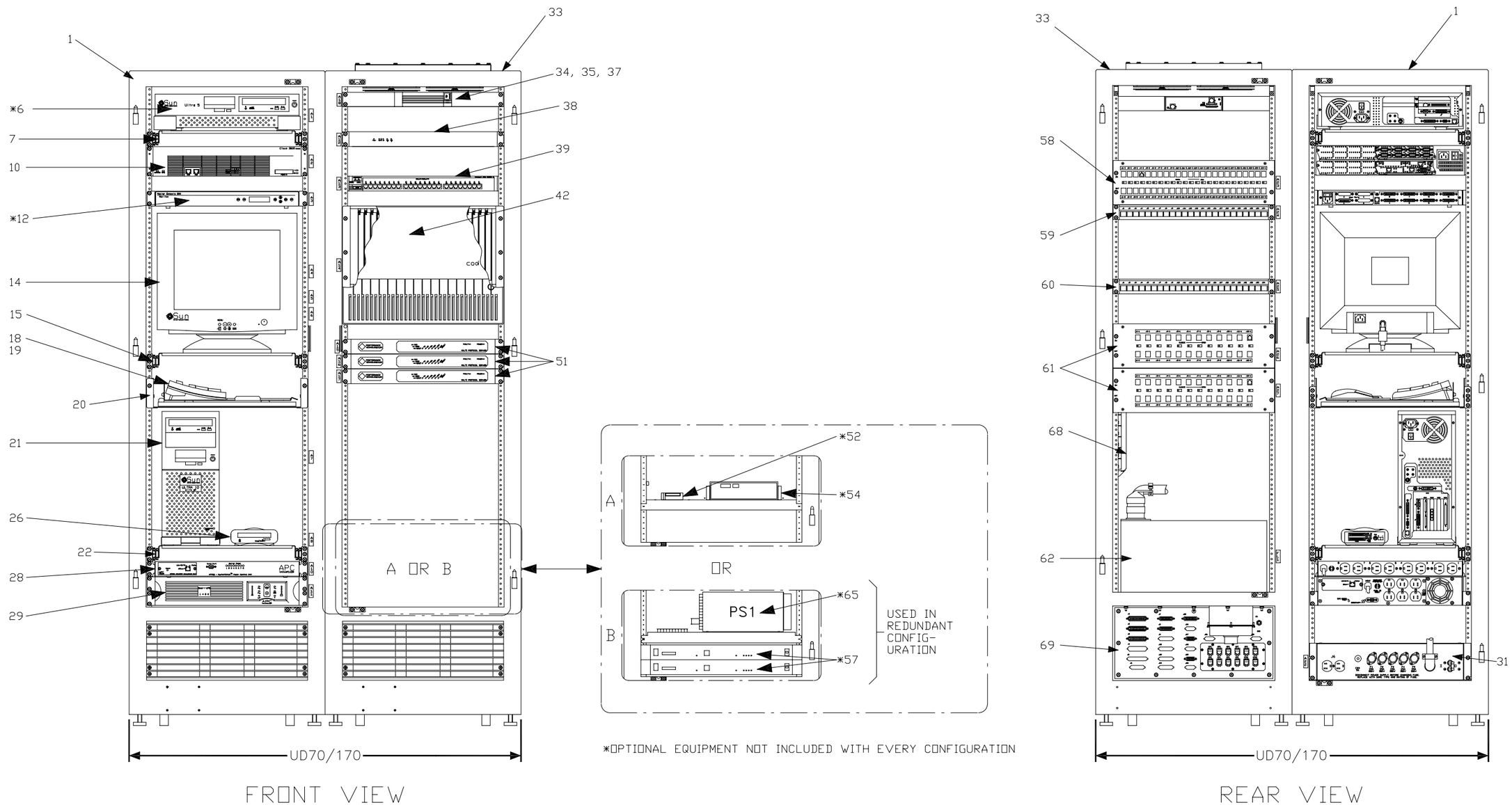

NX1502

FIGURE 64. RPG Processor Communications Assembly, UD70/170 (Sheet 1 of 6)

CABLE ASSEMBLIES (NOT SHOWN)

INDEX NO.	REF DES.	FROM	TO	USABLE ON CODE
64−5	70/170W31	P1(J23)	P2(B1) P2(B2)	
64−78	70/170W8	P1(A20J1)	P2(J5)	A, E, F
64−79	70/170W19	P1(A25J25)	P2(A27J1)	
64−80	70/170W20	P1(A27J2)	P2(J1)	
64−81	70/170W21	P1(A26J1)	P2(A25J26)	
64−82	70/170W22	P1(A26J2)	P2(J3)	
64−83	70/170W32	P1(A24 TELCO)	P2(A23J1)	
64−84	70/170W33	P1(A23J2)	P2(J2)	
64−85	70/170W50	P1(A10J1)	P2(A7A1 POWER)	A, B ,E ,F
64−85	70/170W51	P1(A10J2)	P2(A13 POWER)	A, B, E, F
64−85	70/170W52	P1(A10J3)	P2(A2A1 POWER)	A, B, E, F
64−85	70/170W53	P1(A10J4)	P2(A15 POWER)	A, B, E, F
64−85	70/170W54	P1(A10J5)	P2(A12A1 POWER)	A, B, E, F
64−85	70/170W55	P1(A10J6)	P2(A1A1 POWER)	A, B, E, F
64−85	70/170W56	P1(A10J7)	P2(A16 POWER)	A, B, E, F
64−85	70/170W57	P1(A10J8)	P2(A17 POWER)	A, B, E, F
64−86	70/170W58	P1(A22J2)	P2(A4 POWER)	
64−87	70/170W61	P1(A28 OUT 1)	P2(A7A1 POWER)	C, D
64−87	70/170W63	P1(A28 OUT 2)	P2(A13 POWER)	C, D
64−87	70/170W65	P1(A28 OUT 3)	P2(A2 POWER)	C, D
64−87	70/170W67	P1(A28 OUT 4)	P2(A15 POWER)	C, D
64−87	70/170W69	P1(A29 OUT 1)	P2(A12A1 POWER)	C, D
64−87	70/170W73	P1(A29 OUT 3)	P2(A16 POWER)	C, D
64−87	70/170W75	P1(A29 OUT 4)	P2(A17 POWER)	C, D
64−88	70/170W76	P1(J23)	P2(A14 POWER)	
64−89	70/170W77	P1(A11J6)	P2(A3 POWER)	A, E, F
64−90	70/170W60	P1(A10J1)	P2(A28 IN 1)	C, D
64−90	70/170W62	P1(A10J2)	P2(A28 IN 2)	C, D
64−90	70/170W64	P1(A10J3)	P2(A28 IN 3)	C, D
64−90	70/170W66	P1(A10J4)	P2(A28 IN 4)	C, D
64−90	70/170W68	P1(A10J5)	P2(A29 IN 1)	C, D
64−90	70/170W70	P1(A10J6)	P2(A29 IN 2)	C, D
64−90	70/170W72	P1(A10J7)	P2(A29 IN 3)	C, D
64−90	70/170W74	P1(A10J8)	P2(A29 IN 4)	C, D
64−91	70/170W78	P1(A11J5)	P2(A8 POWER)	

FIGURE 64. RPG Processor Communications Assembly, UD70/170 (Sheet 2 of 6)

CABLE ASSEMBLIES (NOT SHOWN)

INDEX NO.	REF DES	FROM	TO	USABLE ON CODE
64−92	70/170W79	P1(A11J4)	P2(A9 POWER)	
64−93	70/170W80	P1(J23)	P2(A20 POWER)	A, E, F
64−94	70/170W81	P1(J23)	P2(A18 POWER)	
64−95	70/170W83	P1(A11 OUTPUT)	P2(A21 POWER)	
64−96	70/170W86	P1(A19 TELCO)	P2(J20)	E
64−97	70/170W101	P1(A14A1)	P2(A24J1)	
64−97	70/170W102	P1(A14B1)	P2(A24J2)	
64−97	70/170W103	P1(A14A2)	P2(A24J3)	
64−97	70/170W104	P1(A14B2)	P2(A24J4)	
64−97	70/170W105	P1(A14A3)	P2(A24J5)	
64−97	70/170W106	P1(A14B3)	P2(A24J6)	
64−97	70/170W107	P1(A14A4)	P2(A24J7)	
64−97	70/170W108	P1(A14B4)	P2(A24J8)	
64−97	70/170W109	P1(A14B5)	P2(A25J1)	
64−97	70/170W110	P1(A14B6)	P2(A25J2)	
64−97	70/170W111	P1(A14B7)	P2(A25J3)	
64−97	70/170W112	P1(A14B8)	P2(A25J4)	
64−97	70/170W113	P1(A14B9)	P2(A25J5)	
64−97	70/170W114	P1(A14B10)	P2(A25J6)	
64−97	70/170W115	P1(A14B11)	P2(A25J7)	
64−97	70/170W116	P1(A14B12)	P2(A25J8)	
64−97	70/170W117	P1(A14B13)	P2(A25J9)	
64−97	70/170W118	P1(A14B14)	P2(A25J10)	
64−97	70/170W119	P1(A14B15)	P2(A25J11)	
64−97	70/170W120	P1(A14B16)	P2(A25J12)	
64−97	70/170W121	P1(A14B17)	P2(A25J13)	
64−97	70/170W122	P1(A14B18)	P2(A25J14)	
64−97	70/170W123	P1(A14B19)	P2(A25J15)	
64−97	70/170W124	P1(A14B20)	P2(A25J16)	
64−97	70/170W125	P1(A14B21)	P2(A25J17)	
64−98	70/170W149	70/170PSI (V+)	70/170TB2−1	
	70/170W149	70/170PSI (V−)	70/170TB2−4	
	70/170W149	70/170PSI (V−)	PSI G D	
64−99	70/170W149	70/170PSI (V+)	70/170TB2−1	C, D
	70/170W149	70/170PSI (V−)	70/170TB2−4	C, D

FIGURE 64. RPG Processor Communications Assembly, UD70/170 (Sheet 3 of 6)

CABLE ASSEMBLIES (NOT SHOWN)

INDEX NO.	REF DES	FROM	TO	USABLE ON CODE
64−100	70/170W150	P1(J23PWRSTRP)	P2(PS1−L1, N2, GND)	
64−101	70/170W151	P1(J22)	P2(TB2)	C, D
64−102	70/170W200	P1(CP1)	P2(A2A1A0 ETH1)	A, E, F
64−102	70/170W202	P1(CP10)	P2(A13 2x)	A, E, F
64−102	70/170W204	P1(A1A1 J2 <−−>)	P2(A13 4x)	A, E, F
64−102	70/170W212	P1(A1A2 PCI 1)	P2(A13 12x)	A, E, F
64−102	70/170W213	P1(CP2)	P2(A13 13x)	A, E, F
64−102	70/170W214	P1(CP3)	P2(A13 14x)	A, E, F
64−102	70/170W215	P1(CP4)	P2(A13 15x)	A, E, F
64−102	70/170W216	P1(CP5)	P2(A13 16x)	A, E, F
64−102	70/170W235	P1(CP6)	P2(A2A1A1 ETH 0)	A, E, F
64−103	70/170W200A	P1(CP1)	P2(A2A1A1 ETH1)	
64−104	70/170W201	P1(A7A1<...>)	P2(A13 1x)	
64−104	70/170W203	P1(A2A1A0 ETH0)	P2(A13 3x)	
64−104	70/170W208	P1(A11A2 10Base−T)	P2(A13 8x)	
64−104	70/170W209	P1(A10A1 10Base−T)	P2(A13 9x)	
64−104	70/170W206	P1(A12A1 LAN)	P2(A13 6x)	
64−104	70/170W217	P1(A15 TX)	P2(A13 17x)	
64−104	70/170W218	P1(A16 TX)	P2(A13 18x)	
64−104	70/170W219	P1(A17 TX)	P2(A13 19x)	
64−104	70/170W251	P1(J7)	P2(A7A3 PCI 2, 1)	
64−104	70/170W253	P1(J8)	P2(A7A3 PCI 2, 3)	
64−104	70/170W256	P1(A12A1 WAN B)	P2(J19)	
64−105	70/170W207	P1(CP8)	P2(A13 7x)	C, D
64−105	70/170W210	P1(A28 Ethernet)	P2(A13 10x)	C, D
64−105	70/170W211	P1(A29 Ethernet)	P2(A13 11x)	C, D
64−105	70/170W252	P1(J15)	P2(A7A3 PCI 2, 2)	C, D
64−105	70/170W263	P1(CP2)	P2(A28 EIA−232)	C, D
64−105	70/170W233	P1(CP9)	P2(A2A1A0 ETH1)	C, D
64−105	70/170W264	P1(CP3)	P2(A29 EIA−232)	C, D
64−106	70/170W234	P1(CP7)	P2(A2A1A0 W0 T1)	B, C, D
64−106	70/170W250	P1(J17)	P2(A7A3 PCI 2, 0)	B, C, D
64−107	70/170W254	P1(CP14)	P2A2A1 (AUX)	
64−108	70/170W255	P1(A11A1 CONSOLE)	P2(A7A1B)	
64−109	70/170W257	P1(A7A1 A)	P2(A19J1)	E
64−110	70/170W258	P1(A12A1 WAN B)	P2(A18 DTE)	

FIGURE 64. RPG Processor Communications Assembly, UD70/170 (Sheet 4 of 6)

CABLE ASSEMBLIES (NOT SHOWN)

INDEX NO.	REF DES	FROM	TO	USABLE ON CODE
64−111	70/170W259	P1(A18 NET)	P2(J19)	
64−112	70/170W260	P1(A2A1A0W1)	P2(A18 DTE)	G
64−113	70/170W265	P1(A2A1A2 PORT 0)	P2(A14 DTE A21)	
64−113	70/170W291	P1(A2A1A2 PORT 1)	P2(A14 DTE A17)	
64−113	70/170W292	P1(A2A1A2 PORT 2)	P2(A14 DTE A18)	
64−113	70/170W293	P1(A2A1A2 PORT 3)	P2(A14 DTE A19)	
64−113	70/170W294	P1(A2A1A2 PORT 4)	P2(A14 DTE A20)	
64−113	70/170W295	P1(A2A1A2 PORT 5)	P2(A14 DTE B3)	
64−113	70/170W296	P1(A2A1A2 PORT 6)	P2(A14 DTE A4)	
64−113	70/170W297	P1(A2A1A2 PORT 7)	P2(A14 DTE B4)	
64−114	70/170W266	P1(A15 PORT 0)	P2(A14 DTE A1)	
64−114	70/170W267	P1(A15 PORT 1)	P2(A14 DTE B1)	
64−114	70/170W268	P1(A15 PORT 2)	P2(A14 DTE A2)	
64−114	70/170W269	P1(A15 PORT 3)	P2(A14 DTE B2)	
64−114	70/170W270	P1(A15 PORT 4)	P2(A14 DTE A3)	
64−114	70/170W276	P1(A16 PORT 1)	P2(A14 DTE A6)	
64−114	70/170W277	P1(A16 PORT 2)	P2(A14 DTE A7)	
64−114	70/170W278	P1(A16 PORT 3)	P2(A14 DTE A8)	
64−114	70/170W279	P1(A16 PORT 4)	P2(A14 DTE A9)	
64−114	70/170W280	P1(A16 PORT 5)	P2(A14 DTE A10)	
64−114	70/170W281	P1(A16 PORT 6)	P2(A14 DTE A11)	
64−114	70/170W282	P1(A16 PORT 7)	P2(A14 DTE A12)	
64−114	70/170W283	P1(A17 PORT 0)	P2(A14 DTE A13)	
64−114	70/170W284	P1(A17 PORT 1)	P2(A14 DTE A14)	
64−114	70/170W285	P1(A17 PORT 2)	P2(A14 DTE A15)	
64−114	70/170W286	P1(A17 PORT 3)	P2(A14 DTE A16)	
64−115	70/170W275	P1(A16 PORT 0)	P2(A20J2)	A, E, F
64−116	70/170W274	P1(A16 PORT 0)	P2(A14 DTE A5)	B, C, D
64−117	70/170W301	P1(A7A2 PCI 1 BUS A)	P2(A8 SCSI BOTTOM)	
64−118	70/170W302	P1(J12)	P2(A7A5J1)	C, D
64−119	70/170W303	P1(A3 1)	BLANK	A, E, F
	70/170W303	P2(70/170W303A P1)	P3(A7A1J1 KBD)	A, E, F
64−120	70/170W303A	P1(70/170W303 P2)	P2(A7A1J4 VIDEO)	A, E, F
64−120	70/170W304A	P1(70/170W304 P2)	P2(A1A1J4 VIDEO)	A, E, F
64−121	70/170W304	P2(70/170W304A P1)	BLANK	A, E, F
	70/170W304	P1(A3 2)	P3(A1A1J1 KBD)	A, E, F

FIGURE 64. RPG Processor Communications Assembly, UD70/170 (Sheet 5 of 6)

CABLE ASSEMBLIES (NOT SHOWN)

INDEX NO.	REF DES	FROM	TO	USABLE ON CODE
64−122	70/170W311	P3(A5 Keyboard)	BLANK	A, E, F
	70/170W311	P1(A3 USERPORT 1)	P2(CP13)	A, E, F
64−123	70/170W900	P1(J16)	P2(A37 TB1)	C, D
64−125	70/170E1	E1(70/170E1−GND)		

FIGURE 64. RPG Processor Communications Assembly, UD70/170 (Sheet 6 of 6)

FIGURE AND INDEX NO.	REF DES	PART NUMBER	INDENT	DESCRIPTION	CAGE CODE	QTY PER ASSY	CODES SMR	CODES USABLE ON
64−		2300006−3XX	1	RPG PROCESSOR/ COMMUNICATIONS ASSEMBLY (For NHA see FIGURE 63 on Page 2 − 445)	0WY55	REF	XB	
64−1	70/170MP1	22−49622	2	CABINET, PROCESSOR EQUIPMENT (56232) (spec dwg 1221815−201) (For NHA see FIGURE 63 on Page 2 − 445)	19178	1	XB	
64−2	70/170MP11 *	60−02075	3	FILTER, EMI (56232) (spec dwg 1213832−201)	07700	1	PAOZZ	
64−3	70/170B1 * 70/170B2	028254	3	FAN, TUBEAXIAL, CIRCULAR FRAME (56232) (spec dwg 1213829−201)	5Y921	2	PAOZZ	
64−4	70/170MP13 *	551199	3	GUARD, FAN IMPELLER (56232) (spec dwg 1213831−201)	5Y921	2	PAOZZ	
				(ATTACHING PARTS)				
		MS51957−32	3	SCREW	96906	12	PAOZZ	
		MS35338−136	3	WASHER	96906	12	PAOZZ	
		MS15795−806	3	WASHER	96906	24	PAOZZ	
		MS35649−264	3	NUT	96906	12	PAOZZ	
				− − − − − − − − −				
64−5	70/170W31 *	2320034−301	3	CABLE ASSEMBLY, FAN ASSEMBLY	0WY55	1	PAOZZ	
64−6	70/170A1	2300015−3XX	3	BDDS PROCESSOR ASSEMBLY (For breakdown see FIGURE 65 on Page 2 − 477)	0WY55	1	PAODD	A E F
64−7	70/170MP18	CC6920−00−0280	3	SHELF, EQUIPMENT (0WY55) (spec dwg 2200070−201)	06666	1	PAOZZ	
				(ATTACHING PARTS)				
		MS51958−63	3	SCREW	96906	12	PAOZZ	
		MS35338−138	3	WASHER	96906	12	PAOZZ	
		MS15795−808	3	WASHER	96906	12	PAOZZ	
				− − − − − − − − −				
64−8	70/170MP500 *	SJ3560	3	FASTENER STRIP, RECLOSABLE (56232) (spec dwg 9029430−202)	52152	1	PAOZZ	
	NOTE * :	NOT SHOWN						

FIGURE AND INDEX NO.	REF DES	PART NUMBER	INDENT	DESCRIPTION	CAGE CODE	QTY PER ASSY	CODES SMR	CODES USABLE ON
64−9	70/170MP508 *	2200085−202	3	STRAP, TIEDOWN	0WY55	1	PAOZZ	A C D E F
				(ATTACHING PARTS)				
		MS51958−63	3	SCREW	96906	2	PAOZZ	
		MS15795−808	3	WASHER	96906	2	PAOZZ	
		MS35338−138	3	WASHER	96906	2	PAOZZ	
		MS35650−304	3	NUT	96906	2	PAOZZ	
				− − − − − − − − −				
64−10	70/170A2	2300025−303	3	RPG ROUTER ASSEMBLY w/AWIPS LAN	0WY55	1	PAOLD	A E F
	70/170A2−1	2300025−302	3	RPG ROUTER ASSEMBLY w/WAN	0WY55	1	PAOLD	B C D
				(ATTACHING PARTS)				
		MS51958−63	3	SCREW	96906	4	PAOZZ	
		MS35338−138	3	WASHER	96906	4	PAOZZ	
		MS15795−808	3	WASHER	96906	4	PAOZZ	
				− − − − − − − − −				
64−11	70/170A2CP1 *	2300027−301	2	ADAPTER ASSEMBLY, RJ45 TO DB25F	0WY55	1	PAOZZ	
64−12	70/170A3	2210023−201	3	KVM SWITCH	0WY55	1	PAOLD	A E F
64−13	70/170MP513 *	BRKT1U	3	RACKMOUNT BRACKET KIT (0WY55) (spec dwg 2210023−204)	1LXK6	1	PAOZZ	A E F
				(ATTACHING PARTS)				
		MS51958−63	3	SCREW	96906	4	PAOZZ	
		MS35338−138	3	WASHER	96906	4	PAOZZ	
		MS15795−808	3	WASHER	96906	4	PAOZZ	
				− − − − − − − − −				
64−14	70/170A4	X7143A	3	MONITOR, 17” (0WY55) (spec dwg 2210035−201)	7X430	1	PAODD	
64−15	70/170MP18	CC6920−00−0280	3	SHELF, EQUIPMENT (0WY55) (spec dwg 2200070−201)	06666	1	PAOZZ	

NOTE * : NOT SHOWN

FIGURE AND INDEX NO.	REF DES	PART NUMBER	INDENT	DESCRIPTION	CAGE CODE	QTY PER ASSY	CODES SMR	CODES USABLE ON
				(ATTACHING PARTS)				
		MS51958−63	3	SCREW	96906	12	PAOZZ	
		MS35338−138	3	WASHER	96906	12	PAOZZ	
		MS15795−808	3	WASHER	96906	12	PAOZZ	
				− − − − − − − − −				
64−16	70/170MP500 *	SJ3560	3	FASTENER STRIP, RECLOSABLE (56232) (spec dwg 9029430−202)	52152	1	PAOZZ	
64−17	70/170MP508 *	2200085−202	3	STRAP, TIEDOWN	0WY55	2	PAOZZ	
				(ATTACHING PARTS)				
		MS51958−63	3	SCREW	96906	4	PAOZZ	
		MS15795−808	3	WASHER	96906	4	PAOZZ	
		MS35650−304	3	NUT	96906	4	PAOZZ	
		MS35338−138	3	WASHER	96906	4	PAOZZ	
				− − − − − − − − −				
64−18	70/170A5	320−1272−01	3	KEYBOARD (0WY55) (source ctrl dwg 2210017−203 or 2210009−203)	7X430	1	PAOZZ	
64−19	70/170A6	370−3631−01	3	MOUSE (0WY55) (source ctrl dwg 2210017−204 or 2210009−204)	7X430	1	PAOZZ	
64−20	70/170MP505	T3KD1930	3	SHELF, MOUSE WRITING (0WY55) (spec dwg 2200089−201)	81824	1	PAOZZ	
				(ATTACHING PARTS)				
		MS51958−63	3	SCREW	96906	10	PAOZZ	
		MS35338−138	3	WASHER	96906	10	PAOZZ	
		MS15795−808	3	WASHER	96906	10	PAOZZ	
				− − − − − − − − −				
64−21	70/170A7	2300016−301	3	RPG PROCESSOR ASSEMBLY (For breakdown see FIGURE 66 on Page 2 − 479)	0WY55	1	PAODD	
64−22	70/170MP18	CC6920−00−0280	3	SHELF, EQUIPMENT (0WY55) (spec dwg 2200070−201)	06666	1	PAOZZ	
				(ATTACHING PARTS)				
		MS51958−63	3	SCREW	96906	12	PAOZZ	
		MS35338−138	3	WASHER	96906	12	PAOZZ	
	NOTE * :	NOT SHOWN						

FIGURE AND INDEX NO.	REF DES	PART NUMBER	INDENT	DESCRIPTION	CAGE CODE	QTY PER ASSY	CODES SMR	CODES USABLE ON
		MS15795−808	3	WASHER	96906	12	PAOZZ	
				− − − − − − − − −				
64−23	70/170MP500 *	SJ3560	3	FASTENER STRIP, RECLOSABLE (56232) (spec dwg 9029430−202)	52152	1	PAOZZ	
64−24	70/170MP507 *	2200085−201	3	STRAP, TIEDOWN (CPU ASSEMBLY)	0WY55	2	PAOZZ	
				(ATTACHING PARTS)				
		MS35338−138	3	WASHER	96906	4	PAOZZ	
		MS51958−63	3	SCREW	96906	4	PAOZZ	
		MS15795−808	3	WASHER	96906	4	PAOZZ	
		MS35650−304	3	NUT	96906	4	PAOZZ	
				− − − − − − − − −				
64−25	70/170CP13 *	X3872A	4	ADAPTER, VIDEO, 13W3M TO HD15 (0WY55) (spec dwg 2210024−201)	7X430	1	PAOZZ	A E F
64−26	70/170A8	2210008−207	3	SCSI DRIVE, JAZ, EXTERNAL	0WY55	1	PAOLD	
64−27	70/170MP500 *	SJ3560	3	FASTENER STRIP, RECLOSABLE (56232) (spec dwg 9029430−202)	52152	1	PAOZZ	
64−28	70/170A10	2210007−201	3	POWER ADMIN PANEL	0WY55	1	PAOLD	
				(ATTACHING PARTS)				
		MS35338−138	3	WASHER	96906	4	PAOZZ	
		MS51958−63	3	SCREW	96906	4	PAOZZ	
		MS15795−808	3	WASHER	96906	4	PAOZZ	
				− − − − − − − − −				
64−29	70/170A11	2300017−301	3	UPS ASSEMBLY	0WY55	1	PAODD	
				(ATTACHING PARTS)				
		MS51958−63	3	SCREW	96906	8	PAOZZ	
		MS35338−138	3	WASHER	96906	8	PAOZZ	
		MS15795−808	3	WASHER	96906	8	PAOZZ	
				− − − − − − − − −				
64−30	70/170A11A1BT1 *	RBC−24	4	BATTERY MODULE, 12V, 9AH, 20 HR (0WY55) (spec dwg 2210005−204)	75421	1	PAOZZ	
64−31	70/170A22	93−ACUF00M00R03	3	POWER DISTRIBUTION PANEL (Replace with AC PWR DISTRIBUTION, MODIFIED (0WY55) (2500030−301))	30331	1	PAODD	
	NOTE * : NOT SHOWN							

FIGURE AND INDEX NO.	REF DES	PART NUMBER	INDENT	DESCRIPTION	CAGE CODE	QTY PER ASSY	CODES SMR	CODES USABLE ON
				(ATTACHING PARTS)				
		MS51958−63	3	SCREW	96906	4	PAOZZ	
		MS35338−138	3	WASHER	96906	4	PAOZZ	
		MS15795−808	3	WASHER	96906	4	PAOZZ	
				− − − − − − − − −				
64−32	70/170MP40 *	1217074−313	2	BRAID, GROUNDING STRAP	56232	1	PAOZZ	
64−33	70/170MP2	22−49660	2	CABINET, COMMUNICATIONS EQUIPMENT (0WY55) (spec dwg 1221816−201) (For NHA see FIGURE 63 on Page 2 − 445)	19178	1	XB	
64−34	70/170A18	2200107−201	3	CHANNEL SERVICE UNIT ASSEMBLY	0WY55	1	XA	A E F
64−35	70/170A18A1	F2100−100−1110	4	CHANNEL SERVICE UNIT (0WY55) (spec dwg 2200107−202)	1PAN6	1	PAOLD	A E F
64−36	70/170A18PS1 *	30−00087−110V−1	4	AC−DC CONVERTER (0WY55) (spec dwg 2200107−204)	1PAN6	1	PADZZ	A E F
64−37	70/170A18MP1	9−2000−001−1	4	ADAPTER, RACK MOUNT (0WY55) (spec dwg 2200107−203)	1PAN6	1	PAOZZ	A E F
64−38	70/170A12−301	2300026−301	3	GATEWAY ASSEMBLY RDA/RPG, FIRMWARE VERSION 910261	0WY55	1	PAOLD	A B D E F
	70/170A12−307	2300026−307	3	GATEWAY ASSEMBLY RDA/RPG, FIRMWARE VERSION 910267	0WY55	1	PAOLD	C
				(ATTACHING PARTS)				
		MS51958−63	3	SCREW	96906	4	PAOZZ	
		MS35338−138	3	WASHER	96906	4	PAOZZ	
		MS15795−808	3	WASHER	96906	4	PAOZZ	
				− − − − − − − − −				
64−39	70/170A13	2210015−201	3	LAN SWITCH	0WY55	1	PAOLD	
				(ATTACHING PARTS)				
		MS51958−63	3	SCREW	96906	4	PAOZZ	
		MS35338−138	3	WASHER	96906	4	PAOZZ	
	NOTE * :	NOT SHOWN						

FIGURE AND INDEX NO.	REF DES	PART NUMBER	INDENT	DESCRIPTION	CAGE CODE	QTY PER ASSY	CODES SMR	CODES USABLE ON
		MS15795−808	3	WASHER	96906	4	PAOZZ	
				− − − − − − − − −				
64−40	70/170A13CP1 *	74−0495−01	2	ADAPTER, FEMALE, SERIAL, RJ−45 TO DB−9 (0WY55) (spec dwg 2210015−206) (0WY55) (spec dwg 2210022−210)	0GX96	1	PAOZZ	
64−41	70/170A13W1 *	CAB−500RJ	2	CABLE, RJ−45 TO RJ−45, ROLLOVER (0WY55) (spec dwg 2210015−205)	0GX96	1	PAOZZ	
64−42	70/170A14	80400	3	MODEM CHASSIS WITH POWER SUPPLY (56232) (spec dwg 1219738−209)	25420	1	PAODD	
				(ATTACHING PARTS)				
		MS51958−63	3	SCREW	96906	10	PAOZZ	
		MS35338−138	3	WASHER	96906	10	PAOZZ	
		MS15795−808	3	WASHER	96906	10	PAOZZ	
				− − − − − − − − −				
64−43	70/170A14A30 *	22374	4	BACKPLANE, 21 SLOT (56232) (spec dwg 1219738−210)	0BF49	1	PAOLD	
64−44	70/170A14PS1 * AND 70/170A14PS2	80406	4	POWER SUPPLY (56232) (spec dwg 1219738−203)	0BF49	2	PAODD	
64−45	70/170A14B1 *	80405	4	FAN MODULE (56232) (spec dwg 1219738−206)	0BF49	1	PAOZZ	
64−46	70/170A14A1 * THRU 70/170A14A4	21100	4	DATA MODEM, 14K, CARD NEST, DUAL (0BF49) (ALT PN 40372) (56232) (spec dwg 1219739−209) (When exhausted, replace with (56232) (1219739−210))	0BF49	4	PAOLD	
64−47	70/170A14A5 *	42703	4	DATA MODEM, 33K W/SDC CARD NEST, SINGLE (56232) (spec dwg 1219739−210)	0BF49	1	PAOLD	B C D
64−48	70/170A14A6 * THRU 70/170A14A20	21102	4	DATA MODEM, 14K, CARD NEST, SINGLE (0BF49) (ALT PN 40373) (56232) (spec dwg 1219739−207)	0BF49	15	PAOLD	
64−49	70/170A14A21 *	21102	4	DATA MODEM, 14K, CARD NEST, SINGLE (0BF49) (ALT PN 40373) (56232) (spec dwg 1219739−207)	0BF49	1	PAOLD	A E F
	NOTE * : NOT SHOWN							

FIGURE AND INDEX NO.	REF DES	PART NUMBER	INDENT	DESCRIPTION	CAGE CODE	QTY PER ASSY	CODES SMR	CODES USABLE ON
64−50	70/170A14A21−1 *	42703	4	DATA MODEM, 33K W/SDC CARD NEST, SINGLE (56232) (spec dwg 1219739−210)	0BF49	1	PAOLD	B C D
64−51	70/170A15 70/170A16 70/170A17	PT−MPS800−11221	3	COMMS SERVER (00Q53) (ALT PN MPS800) (0WY55) (spec dwg 2210042−201)	77934	3	PAOLD	
				(ATTACHING PARTS)				
		MS51958−63	3	SCREW	96906	12	PAOZZ	
		MS35338−138	3	WASHER	96906	12	PAOZZ	
		MS15795−808	3	WASHER	96906	12	PAOZZ	
				− − − − − − − − −				
64−52	70/170A19	GJ−ME721B−M	3	MODEM, DIGITAL DATA LINE DRIVER (56232) (spec dwg 1217046−201)	59951	1	PAOZZ	E
64−53	70/170MP24 *	1213887−102	3	CLAMP, SHORT HAUL MODEM	56232	1	XB	E
				(ATTACHING PARTS)				
		MS51958−61	3	SCREW	96906	2	PAOZZ	
		MS35338−138	3	WASHER	96906	2	PAOZZ	
		MS15795−808	3	WASHER	96906	2	PAOZZ	
				− − − − − − − − −				
64−54	70/170A20	IC456A	3	CONVERTER, STANDALONE (56232) (spec dwg 1213823−202)	59951	1	PAOLD	A E F
64−55	70/170MP34 *	2310014−301	3	SHELF, CONVERTER MTG	0WY55	1	PAOZZ	A E F
				(ATTACHING PARTS)				
		MS51958−63	3	SCREW	96906	4	PAOZZ	
		MS35338−138	3	WASHER	96906	4	PAOZZ	
		MS15795−808	3	WASHER	96906	4	PAOZZ	
64−56	*	2200085−203	3	STRAP, TIEDOWN (CONVERTER)	0WY55	2	PAOZZ	
		MS51958−63	3	SCREW	96906	4	PAOZZ	
		MS35338−138	3	WASHER	96906	4	PAOZZ	
		MS15795−808	3	WASHER	96906	4	PAOZZ	
		MS35650−304	3	NUT	96906	4	PAOZZ	
				− − − − − − − − −				
64−57	70/170A28 70/170A29	2210006−201	3	POWER ADMIN, FAA	0WY55	2	PAODD	C D
	NOTE * : NOT SHOWN							

FIGURE AND INDEX NO.	REF DES	PART NUMBER	INDENT	DESCRIPTION	CAGE CODE	QTY PER ASSY	CODES SMR	CODES USABLE ON
				(ATTACHING PARTS)				
		MS51958−63	3	SCREW	96906	8	PAOZZ	
		MS35338−138	3	WASHER	96906	8	PAOZZ	
		MS15795−808	3	WASHER	96906	8	PAOZZ	
				− − − − − − − − −				
64−58	70/170A23	603026	3	TELEPHONE PATCH PANEL (0WY55) (vendor item dwg 2200026−201)	0HRP8	1	PAOZZ	
				(ATTACHING PARTS)				
		MS51958−63	3	SCREW	96906	4	PAOZZ	
		MS35338−138	3	WASHER	96906	4	PAOZZ	
		MS15795−808	3	WASHER	96906	4	PAOZZ	
				− − − − − − − − −				
64−59	70/170A24	603027	3	PANEL, ADAPTER, COMMUNICATION (0WY55) (vendor item dwg 2200027−201)	0HRP8	1	PAOZZ	
				(ATTACHING PARTS)				
		MS51958−63	3	SCREW	96906	4	PAOZZ	
		MS35338−138	3	WASHER	96906	4	PAOZZ	
		MS15795−808	3	WASHER	96906	4	PAOZZ	
				− − − − − − − − −				
64−60	70/170A25	RJ45S−24−4	3	PANEL, ADAPTER, COMMUNICATIONS (56232) (spec dwg 1219734−201)	65752	1	PAOZZ	
				(ATTACHING PARTS)				
		MS51958−63	3	SCREW	96906	4	PAOZZ	
		MS35338−138	3	WASHER	96906	4	PAOZZ	
		MS15795−808	3	WASHER	96906	4	PAOZZ	
				− − − − − − − − −				
64−61	70/170A26 70/170A27	MF−RJ11−12−4	3	TELEPHONE PATCH PANEL, DEDICATED (56232) (spec dwg 1213826−201)	0YW95	2	PAOZZ	
				(ATTACHING PARTS)				
		MS51958−63	3	SCREW	96906	8	PAOZZ	
		MS35338−138	3	WASHER	96906	8	PAOZZ	
		MS15795−808	3	WASHER	96906	8	PAOZZ	
				− − − − − − − − −				
	NOTE * :	NOT SHOWN						

FIGURE AND INDEX NO.	REF DES	PART NUMBER	INDENT	DESCRIPTION	CAGE CODE	QTY PER ASSY	CODES SMR	CODES USABLE ON
64−62	70/170FL1	FA60−2015	3	FILTER, BANDPASS (13619) (ALT PN RF13126) (56232) (spec dwg 1213645−201)	81831	1	PAOLD	
64−63	70/170MP43 *	1213847−202	3	GASKET, SHIELDING, ELECTRONIC	56232	1	PAOZZ	
64−64	70/170MP11 *	60−02075	3	FILTER, EMI (56232) (spec dwg 1213832−201)	07700	1	PAOZZ	
64−65	70/170PS1	LRS−55−28−2602 OR LRS−55−28−43720	3	POWER SUPPLY ASSEMBLY (56232) (spec dwg 1213675−215)	9T790	1	PAODD	C D
64−66	*	MDA15	4	FUSE, 250V	71400	1	PAOZZ	
				(ATTACHING PARTS)				
		MS51958−63	3	SCREW	96906	4	PAOZZ	
		MS35338−138	3	WASHER	96906	4	PAOZZ	
		MS15795−808	3	WASHER	96906	4	PAOZZ	
				− − − − − − − − −				
64−67	70/170TB2 *	37TB8F	3	TERMINAL BOARD	81349	1	PAOZZ	C D
				(ATTACHING PARTS)				
		MS51957−33	3	SCREW	96906	2	PAOZZ	
		NAS620C6	3	WASHER	96906	2	PAOZZ	
		MS35338−136	3	WASHER	96906	2	PAOZZ	
				− − − − − − − − −				
64−68	70/170J23	1217822−302	3	POWER STRIP ASSEMBLY	56232	1	PAOOO	
				(ATTACHING PARTS)				
		MS51958−61	3	SCREW	96906	2	PAOZZ	
		MS35338−138	3	WASHER	96906	4	PAOZZ	
		MS15795−808	3	WASHER	96906	4	PAOZZ	
				− − − − − − − − −				
64−69	70/170MP4	2310010−301	3	PANEL, CABLE ENTRY, RPG COMM	0WY55	1	PAOZZ	
64−70	70/170MP99 *	44−02633	3	GASKET, SHIELDING, ELECTRONIC (56232) (spec dwg 1213850−201)	07700	1	PAOZZ	
				(ATTACHING PARTS)				
		MS15795−808	3	WASHER	96906	12	PAOZZ	
		MS35338−138	3	WASHER	96906	12	PAOZZ	
		MS51958−63	3	SCREW	96906	12	PAOZZ	
	NOTE * :	NOT SHOWN						

FIGURE AND INDEX NO.	REF DES	PART NUMBER	INDENT	DESCRIPTION	CAGE CODE	QTY PER ASSY	CODES SMR	CODES USABLE ON
		NAS1829C6J12	3	POST	80205	2	PAOZZ	
				− − − − − − − − − −				
64−71	70/170MP3 *	2100009−102	4	PANEL, ADAPTER, MOD COUPLER	0WY55	1	PAOZZ	
				(ATTACHING PARTS)				
		MS51957−15	4	SCREW	96906	10	PAOZZ	
		MS35338−135	4	WASHER	96906	10	PAOZZ	
		MS15795−803	4	WASHER	96906	10	PAOZZ	
				− − − − − − − − − −				
64−72	70/170CP1 THRU 70/170CP12 *	080888S−S1−SH	5	COUPLER (0WY55) (spec dwg 2210034−201)	1R2G7	12	PAOZZ	
64−73	70/170J19 *	2300011−302	4	ADAPTER ASSEMBLY, RJ−45 TO DB15F	0WY55	1	PAOZZ	
64−74	70/170J7 *	2300010−302	4	ADAPTER ASSEMBLY, RJ−45 TO DB25F	0WY55	1	PAOZZ	
64−75	70/170J8 *	2300018−301	4	ADAPTER ASSEMBLY, RJ−45 TO DB25M	0WY55	1	PAOZZ	
64−76	70/170J15 *	2300010−301	4	ADAPTER ASSEMBLY, RJ−45 TO DB25F	0WY55	1	PAOZZ	C D
64−77	70/170J17 *	2300011−301	4	ADAPTER ASSEMBLY, RJ−45 TO DB15F	0WY55	1	PAOZZ	B C D
64−78	70/170W8 *	2320038−301	3	CABLE ASSEMBLY	0WY55	1	PAOZZ	A E F
64−79	70/170W19 *	2320028−303	3	CABLE ASSEMBLY	0WY55	1	PAOZZ	
64−80	70/170W20 *	2320027−301	3	CABLE ASSEMBLY	0WY55	1	PAOZZ	
64−81	70/170W21 *	2320027−302	3	CABLE ASSEMBLY	0WY55	1	PAOZZ	
64−82	70/170W22 *	2320027−303	3	CABLE ASSEMBLY	0WY55	1	PAOZZ	
64−83	70/170W32 *	2320028−301	3	CABLE ASSEMBLY	0WY55	1	PAOZZ	
64−84	70/170W33 *	2320028−302	3	CABLE ASSEMBLY	0WY55	1	PAOZZ	
64−85	70/170W50 THRU 70/170W57 *	2320049−303	3	CABLE ASSEMBLY	0WY55	8	PAOZZ	A B E F
64−86	70/170W58 *	2320049−303	3	CABLE ASSEMBLY	0WY55	1	PAOZZ	
	NOTE * : NOT SHOWN							

FIGURE AND INDEX NO.	REF DES		PART NUMBER	INDENT	DESCRIPTION	CAGE CODE	QTY PER ASSY	CODES SMR	CODES USABLE ON
64−87	70/170W61 70/170W63 70/170W65 70/170W67 70/170W69 70/170W73 70/170W75	*	2320049−303	3	CABLE ASSEMBLY	0WY55	7	PAOZZ	C D
64−88	70/170W76	*	2320049−303	3	CABLE ASSEMBLY	0WY55	1	PAOZZ	
64−89	70/170W77	*	2320049−303	3	CABLE ASSEMBLY	0WY55	1	PAOZZ	A E F
64−90	70/170W60 70/170W62 70/170W64 70/170W66 70/170W68 70/170W70 70/170W72 70/170W74	*	2320049−301	3	CABLE ASSEMBLY	0WY55	8	PAOZZ	C D
64−91	70/170W78	*	2320049−302	3	CABLE ASSEMBLY	0WY55	1	PAOZZ	
64−92	70/170W79	*	2320049−302	3	CABLE ASSEMBLY	0WY55	1	PAOZZ	
64−93	70/170W80	*	2320049−304	3	CABLE ASSEMBLY	0WY55	1	PAOZZ	A E F
64−94	70/170W81	*	2320049−305	3	CABLE ASSEMBLY	0WY55	1	PAOZZ	
64−95	70/170W83	*	2320049−303	3	CABLE ASSEMBLY	0WY55	1	PAOZZ	
64−96	70/170W86	*	2320039−301	3	CABLE ASSEMBLY	0WY55	1	PAOZZ	E
64−97	70/170W101 THRU 70/170W125	*	2320047−301	3	CABLE ASSEMBLY	0WY55	25	PAOZZ	
64−98	70/170W149	*	2320030−302	3	CABLE ASSEMBLY	0WY55	1	PAOZZ	
64−99	70/170W149	*	2320030−301	3	CABLE ASSEMBLY	0WY55	1	PAOZZ	C D
64−100	70/170W150	*	2320060−301	3	CABLE ASSEMBLY	0WY55	1	PAOZZ	
64−101	70/170W151	*	2320032−301	3	CABLE ASSEMBLY	0WY55	1	PAOZZ	C D
64−102	70/170W200 70/170W202 70/170W204 70/170W212 THRU 70/170W216 70/170W235	*	2320047−308	3	CABLE ASSEMBLY	0WY55	9	PAOZZ	A E F
64−103	70/170W200A	*	2320047−308	3	CABLE ASSEMBLY	0WY55	1	PAOZZ	
	NOTE * :		NOT SHOWN						

FIGURE AND INDEX NO.	REF DES	PART NUMBER	INDENT	DESCRIPTION	CAGE CODE	QTY PER ASSY	CODES SMR	CODES USABLE ON
64−104	70/170W201 * 70/170W203 70/170W206 70/170W208 70/170W209 70/170W217 70/170W218 70/170W219 70/170W251 70/170W253 70/170W256	2320047−308	3	CABLE ASSEMBLY	0WY55	11	PAOZZ	
64−105	70/170W207 * 70/170W210 70/170W211 70/170W233 70/170W252 70/170W263 70/170W264	2320047−308	3	CABLE ASSEMBLY	0WY55	7	PAOZZ	C D
64−106	70/170W234 * 70/170W250	2320047−308	3	CABLE ASSEMBLY	0WY55	2	PAOZZ	B C D
64−107	70/170W254 *	2320047−313	3	CABLE ASSEMBLY	0WY55	1	PAOZZ	
64−108	70/170W255 *	2320048−303	3	CABLE ASSEMBLY	0WY55	1	PAOZZ	
64−109	70/170W257 *	2320048−302	3	CABLE ASSEMBLY	0WY55	1	PAOZZ	E
64−110	70/170W258 *	2320047−308	3	CABLE ASSEMBLY	0WY55	1	PAOZZ	
64−111	70/170W259 *	2320047−308	3	CABLE ASSEMBLY	0WY55	1	PAOZZ	
64−112	70/170W260 *	2320047−308	3	CABLE ASSEMBLY	0WY55	1	PAOZZ	G
64−113	70/170W265 * 70/170W291 THRU 70/170W297	2320052−301	3	CABLE ASSEMBLY	0WY55	8	PAOZZ	
64−114	70/170W266 * THRU 70/170W270 70/170W276 THRU 70/170W286	2320048−301	3	CABLE ASSEMBLY	0WY55	16	PAOZZ	
64−115	70/170W275 *	2320048−301	3	CABLE ASSEMBLY	0WY55	2	PAOZZ	A E F
64−116	70/170W274 *	2320048−301	3	CABLE ASSEMBLY	0WY55	1	PAOZZ	B C D
64−117	70/170W301 *	2320053−301	3	CABLE ASSEMBLY	0WY55	1	PAOZZ	
64−118	70/170W302 *	2320016−301	3	CABLE ASSEMBLY	0WY55	1	PAOZZ	C D

NOTE * : NOT SHOWN

FIGURE AND INDEX NO.	REF DES		PART NUMBER	INDENT	DESCRIPTION	CAGE CODE	QTY PER ASSY	CODES SMR	CODES USABLE ON
64−119	70/170W303	*	2320051−301	3	CABLE ASSEMBLY	0WY55	1	PAOZZ	A E F
64−120	70/170W303A 70/170W304A	*	2320054−301	3	CABLE ASSEMBLY KIT, ADAPTER	0WY55	2	PAOZZ	A E F
64−121	70/170W304	*	2320051−301	3	CABLE ASSEMBLY	0WY55	1	PAOZZ	A E F
64−122	70/170W311	*	2320051−302	3	CABLE ASSEMBLY	0WY55	1	PAOZZ	A E F
64−123	70/170W900	*	2320056−301	3	CABLE ASSEMBLY	0WY55	1	PAOZZ	C D
64−124	70/170CP14	*	74−0495−01	3	ADAPTER, FEMALE, SERIAL, RJ−45 TO DB−9 (0WY55) (spec dwg 2210022−210) (0WY55) (spec dwg 2210015−206)	0GX96	1	PAOZZ	
64−125	70/170E1	*	2320061−302	3	CABLE ASSEMBLY	0WY55	1	PAOZZ	

USABLE ON CODES

A − RPG NWS STANDARD
B − RPG DOD
C − RPG FAA #1
D − RPG FAA #2
E − RPG NWS MLOS
F − RPG NWS KEY WEST
G − EVANSVILLE, IN

NOTE * : NOT SHOWN

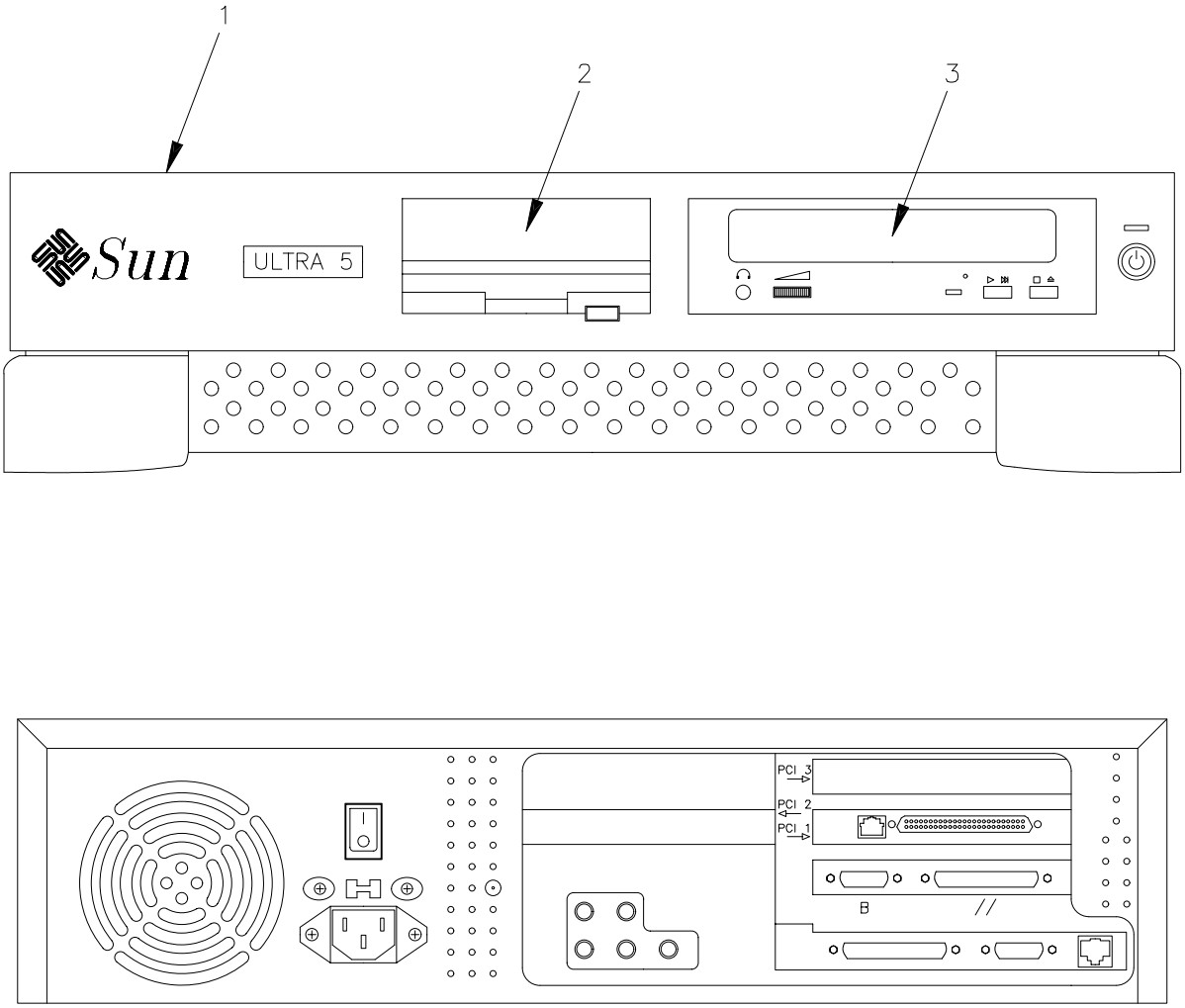

NX1772

FIGURE 65. BDDS Processor Assembly, UD70A1/UD72A1

FIGURE AND INDEX NO.	REF DES	PART NUMBER	INDENT	DESCRIPTION	CAGE CODE	QTY PER ASSY	CODES SMR	CODES USABLE ON
65−	70/170A1	2300015−3XX	1	BDDS PROCESSOR ASSEMBLY (For NHA see FIGURE 64 on Page 2 − 457)	0WY55	REF	PAODD	
65−1	70/170A1A1 ** 72A1A1	A21UJC1A9P−C256CP	2	ULTRA 5 (0WY55) (spec dwg 2210009−202) (To replace, order next higher assembly)	7X430	1	PAODD	
65−2	70/170A1A1A2 72A1A1A2	370−3159−01	2	3.5 INCH FLOPPY DRIVE (0WY55) (source ctrl dwg 2210009−207 or 2210017−207)	7X430	1	PAOZZ	
65−3	70/170A1A1A3 72A1A1A3	370−3694−01	2	CDROM DRIVE, 32X (0WY55) (source ctrl dwg 2210009−208 or 2210017−208)	7X430	1	PAOZZ	
65−4	70/170A1A1A4 * 72A1A1A4	370−3693−01 OR 370−4348−01	2	HARD DISK DRIVE, 9GB OR GREATER (0WY55) (spec dwg 2210009−209 or 2210017−209)	7X430	1	PAOLD	

NOTE * : NOT SHOWN

NOTE ** : TO REPLACE, ORDER NEXT HIGHER ASSEMBLY

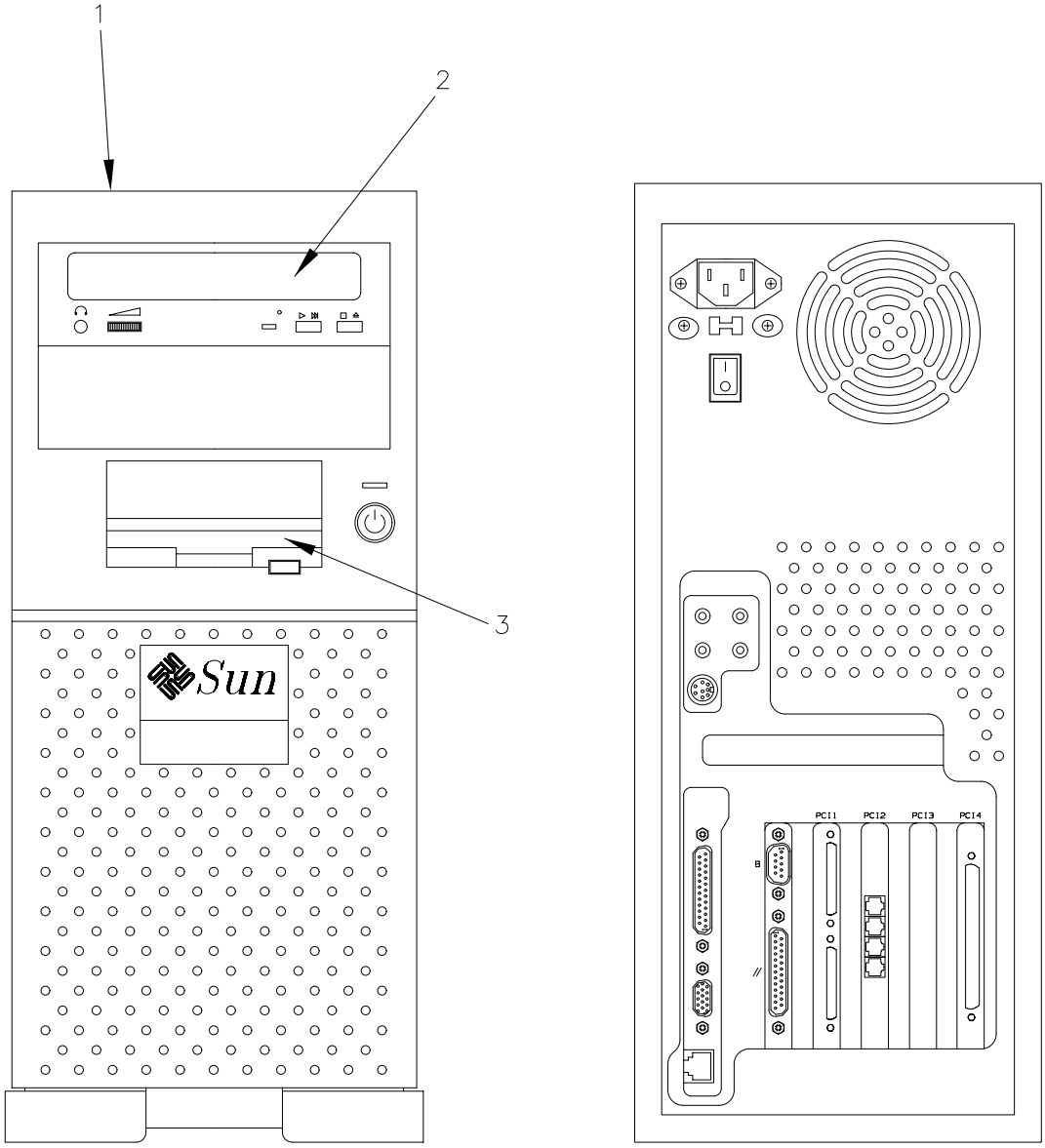

NX1773

FIGURE 66. RPG Processor Assembly, UD70/170A7

FIGURE AND INDEX NO.	REF DES	PART NUMBER	INDENT	DESCRIPTION	CAGE CODE	QTY PER ASSY	CODES SMR	CODES USABLE ON
66−	70/170A7	2300016−301	1	RPG PROCESSOR ASSEMBLY (For NHA see FIGURE 64 on Page 2 − 457)	0WY55	REF	PAODD	
66−1	70/170A7A1 **	A22UKC1A9P−C256CP	2	RPG PROCESSOR (SUN ULTRA 10) (0WY55) (spec dwg 2210017−201) (To replace, order next higher assembly)	7X430	1	PAODD	
66−2	70/170A7A1A3	370−3694−01	2	CDROM DRIVE, 32X (0WY55) (source ctrl dwg 2210017−208 or 2210009−208)	7X430	1	PAOZZ	
66−3	70/170A7A1A2	370−3159−01	2	3.5 INCH FLOPPY DRIVE (0WY55) (source ctrl dwg 2210017−207 or 2210009−207)	7X430	1	PAOZZ	
66−4	70/170A7A1A4 *	370−3693−01 OR 370−4348−01	2	HARD DISK DRIVE, 9GB OR GREATER (0WY55) (spec dwg 2210009−209 or 2210017−209)	7X430	1	PAOLD	

NOTE * : NOT SHOWN

NOTE ** : TO REPLACE, ORDER NEXT HIGHER ASSEMBLY

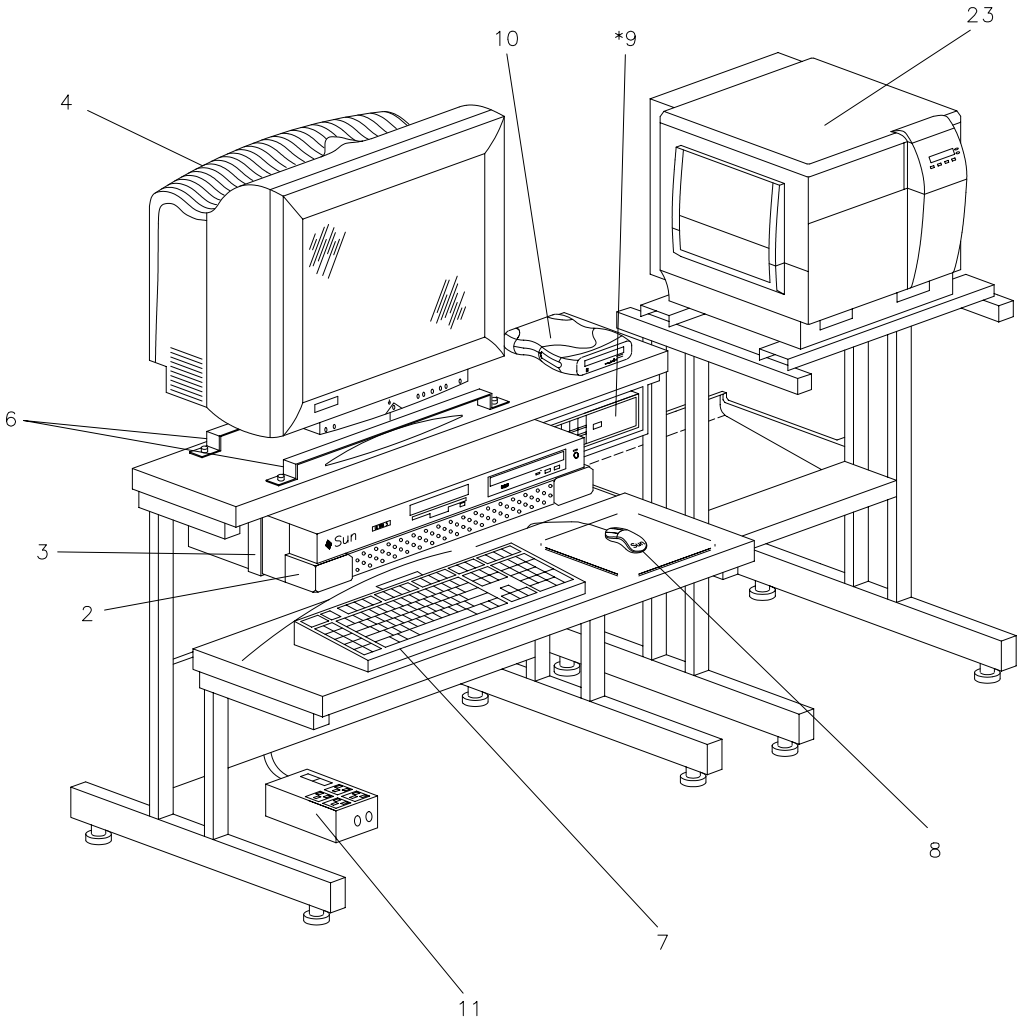

* DISTANT MSCF WORKSTATION ONLY
(DOD AND FAA)

NX1503

FIGURE 67. MSCF Workstation Component Location, UD71, and UD79 (Sheet 1 of 2)

CABLE ASSEMBLIES (NOT SHOWN)

INDEX NO.	REF DES	FROM	TO	USABLE ON CODE
67−5	71W214	P2(A21 SCSI [B])	P2(A1A1J4 VIDEO)	
67−17	71W187	P1(E1)	P2(A1A1 POWER)	
67−18	71W188	P1(E1)	P2(A2 POWER)	
67−19	71W189	P1(E1)	P2(A5 POWER)	
67−20	71W190	P1(E1)	P2(A6 POWER)	
67−21	71W211	P1(A1A1A4 PC13)	P2(A6 SCSI [T])	
67−34	71W902	P1(71 CP1)	P2(71A1A2 PCI 1)	C
67−35	71W902A	P1(71E1 OUT)	P2(71A1A2 PCI 1)	B

FIGURE 67. MSCF Workstation Component Location, UD71, and UD79 (Sheet 2 of 2)

FIGURE AND INDEX NO.	REF DES	PART NUMBER	INDENT	DESCRIPTION	CAGE CODE	QTY PER ASSY	CODES SMR	CODES USABLE ON
67−		2300007−3XX	1	MASTER SYSTEM CONTROL FUNCTION GROUP	0WY55	REF	XC	
67−1	71 **	2300023−3XX	2	MSCF WORKSTATION (For NHA see FIGURE 63 on Page 2 − 445)	0WY55	1	XC	
67−2	71A1	2300015−3XX	2	MSCF PROCESSOR ASSEMBLY (For breakdown see FIGURE 69 on Page 2 − 490)	0WY55	1	PAODD	
67−3	71MP10	2310011−301	2	CLAMP ASSEMBLY, ULTRA 5 MOUNTING	0WY55	2	PAOZZ	
				(ATTACHING PARTS)				
		MS51958−63	2	SCREW	96906	4	PAOZZ	
		MS35338−138	2	WASHER	96906	4	PAOZZ	
		MS15795−808	2	WASHER	96906	4	PAOZZ	
				− − − − − − − − −				
67−4	71A2	2210036−201	2	MONITOR, 21”	0WY55	1	PAODD	
67−5	71W214 **	2320054−301	2	CABLE ASSEMBLY KIT, ADAPTER	0WY55	1	PAOZZ	
67−6	71MP11	2310012−301	2	CLAMP ASSEMBLY, 21” MONITOR MOUNTING	0WY55	2	PAOZZ	
	71MP1MP2 **	1223119−201	2	T−NUT, PLATE	56232	4	PAOZZ	
				(ATTACHING PARTS)				
		MS51958−63	2	SCREW	96906	4	PAOZZ	
		MS35338−138	2	WASHER	96906	4	PAOZZ	
		MS15795−808	2	WASHER	96906	4	PAOZZ	
				− − − − − − − − −				
67−7	71A3	320−1272−01	2	KEYBOARD (0WY55) (source ctrl dwg 2210009−203 or 2210017−203)	7X430	1	PAOZZ	
67−8	71A4	370−3631−01	2	MOUSE (0WY55) (source ctrl dwg 2210009−204 or 2210017−204)	7X430	1	PAOZZ	
67−9	71A5 *	42701	2	MODEM, 33.6 DEDICATED STANDALONE (56232) (spec dwg 1219739−211)	0BF49	1	PAOLD	A
67−10	71A6	2210008−207	2	SCSI DRIVE, JAZ, EXTERNAL	0WY55	1	PAOLD	
67−11	71E1	ISOTEL4	2	SURGE SUPPRESSOR (0WY55) (vendor item dwg 2200020−201)	65836	1	PAOZZ	

NOTE * : SITE DEPENDENT
NOTE ** : NOT SHOWN

FIGURE AND INDEX NO.	REF DES		PART NUMBER	INDENT	DESCRIPTION	CAGE CODE	QTY PER ASSY	CODES SMR	CODES USABLE ON
67−12	71MP1A1	**	43−456A	2	INTERCOM STATION TELEPHONE AND 2−WAY INTERCOM SYSTEM (Replaces PN 43−616)	62676	1	PAOZZ	
67−13	71A9	**	1218758−102	2	POWER STRIP	56232	1	PAOOO	
					(ATTACHING PARTS)				
			MS51957−45	2	SCREW	96906	2	PAOZZ	
			MS35338−137	2	WASHER	96906	2	PAOZZ	
			MS15795−807	2	WASHER	96906	4	PAOZZ	
			MS35649−284	2	NUT	96906	2	PAOZZ	
					− − − − − − − − −				
67−14	71A44	**	SPS−210	2	INTERCOM STATION, SOUND POWERED	56093	1	PAOZZ	
67−15	71MP1		1214560−1XX	2	TABLE MODIFIED	56232	1	XB	
67−16	71A7	**	PC642C−150LCW AND PCB1B−10A	2	ARRESTOR, SURGE (56232) (spec dwg 1222341−201)	0HHK2	1	PAOZZ	A
67−17	71W187	**	2320049−303	2	CABLE ASSEMBLY	0WY55	1	PAOZZ	
67−18	71W188	**	2320049−303	2	CABLE ASSEMBLY	0WY55	1	PAOZZ	
67−19	71W189	**	2320049−303	2	CABLE ASSEMBLY	0WY55	1	PAOZZ	
67−20	71W190	**	2320049−302	2	CABLE ASSEMBLY	0WY55	1	PAOZZ	
67−21	71W211	**	2320053−301	2	CABLE ASSEMBLY	0WY55	1	PAOZZ	
67−22	79	**	2300024−301	2	MSCF PRINTER STATION (For NHA see FIGURE 63 on Page 2 − 445)	0WY55	1	XC	
67−23	79A1		2210030−201	2	PRINTER, COLOR LASER, XEROX PHAZER Z750	0WY55	1	PAODD	
67−24	79A1MP2	**	016−1839−00	3	FUSER (0WY55) (spec dwg 2210030−211)	0SD37	1	PAOZZ	
67−25	79A1MP3	**	016−1843−00	3	FUSER ROLL (0WY55) (spec dwg 2210030−212)	0SD37	1	PAOZZ	
67−26	79A1MP4	**	016−1841−00	3	IMAGING UNIT (0WY55) (spec dwg 2210030−213)	0SD37	1	PAOZZ	
67−27	79A1MP5	**	016−1665−00	3	MAIN CHARGE GRID (0WY55) (spec dwg 2210030−214)	0SD37	1	PAOZZ	
67−28	79A1MP6	**	016−1842−00	3	TRANSFER KIT (0WY55) (spec dwg 2210030−215)	0SD37	1	PAOZZ	

NOTE * : SITE DEPENDENT
NOTE ** : NOT SHOWN

FIGURE AND INDEX NO.	REF DES	PART NUMBER	INDENT	DESCRIPTION	CAGE CODE	QTY PER ASSY	CODES SMR	CODES USABLE ON
67−29	79A1MP7 **	016−1803−01	3	HIGH−CAPACITY TONER CARTRIDGE, BLACK (0WY55) (spec dwg 2210030−206)	0SD37	1	PAOZZ	
67−30	79A1MP8 **	016−1805−00	3	STANDARD TONER CARTRIDGE, MAGENTA (0WY55) (spec dwg 2210030−203)	0SD37	1	PAOZZ	
67−31	79A1MP9 **	016−1804−00	3	STANDARD TONER CARTRIDGE, CYAN (0WY55) (spec dwg 2210030−204)	0SD37	1	PAOZZ	
67−32	79A1MP10 **	016−1806−00	3	STANDARD TONER CARTRIDGE, YELLOW (0WY55) (spec dwg 2210030−205)	0SD37	1	PAOZZ	
67−33	79MP1 **	3000UP	2	STAND, OFFICE MACHINE (56232) (spec dwg 1214783−201)	0H3W3	1	PAOZZ	
67−34	71W902 **	2320062−303	2	CABLE ASSEMBLY	0WY55	1	PAOZZ	C
67−35	71W902A **	2320062−304	2	CABLE ASSEMBLY	0WY55	1	PAOZZ	B

USABLE ON CODES

A − MSCF DISTANT

B − FAA ONLY

C − DOD AND NWS SINGLE CHANNEL

D − NWS REDUNDANT

NOTE * : SITE DEPENDENT

NOTE ** : NOT SHOWN

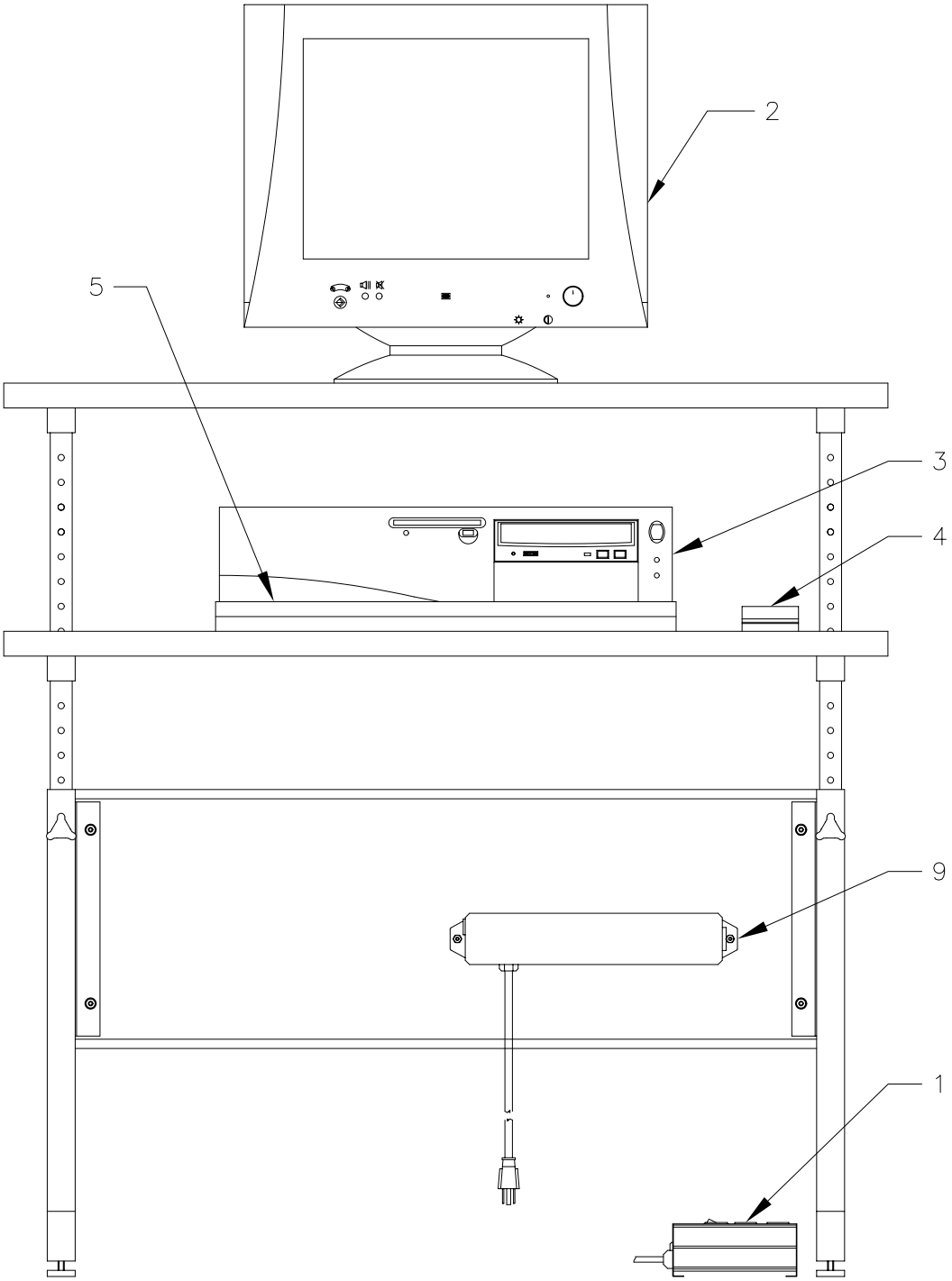

NX1781

FIGURE 68. RRRAT Equipment, UD34 and UD32 (Sheet 1 of 2)

CABLE ASSEMBLIES (NOT SHOWN)

INDEX NO.	REF DES	FROM	TO	USABLE ON CODE
68−10	34W900	P1(34A1DTE)	P2(34CP1)	A
68−11	34W901	P1(34A2DTE)	P2(34A12)	A
68−12	32W905	P1(A2−C1)	P2(32CP1)	B
68−13	32W906	P1(A2−C2)	P2(32A12)	B
68−14	34W902	P1(34E1)	P2(34A9A3TELCO)	A
68−15	32W900	P1(32E1)	P2(32A9A3TELCO)	B

FIGURE 68. RRRAT Equipment, UD34 and UD32 (Sheet 2 of 2)

FIGURE AND INDEX NO.	REF DES	PART NUMBER	INDENT	DESCRIPTION	CAGE CODE	QTY PER ASSY	CODES SMR	CODES USABLE ON
68−	34	1214559−313	1	RRRAT EQUIPMENT (For NHA see FIGURE 67 on Page 2 − 481)	0WY55	REF	XC	A
	32	1214559−305	1	RRRAT EQUIPMENT (For NHA see FIGURE 67 on Page 2 − 481)	0WY55	REF	XC	B
68−1	34E1 32E1	ISOTEL4	2	SURGE SUPPRESSOR (0WY55) (vendor item dwg 2200020−201)	65836	1	PAOZZ	
68−2	34A10 32A10	5D	2	MONITOR (0WY55) (spec dwg 2200015−201)	0WBG2	1	PAOLD	
68−3	34A9	2300000−301	2	CPU TERMINAL	0WY55	1	PAOLD	A
	32A9	2300028−301	2	CPU TERMINAL	0WY55	1	PAOLD	B
68−4	34A13	141189−401	2	MOUSE, SERIAL (0WY55) (vendor item dwg 2200014−203 or 2200105−203) (0TZZ9) (ALT PN MOU−MS/ERGO−PS2)	65685	1	PAOZZ	A
	32A13	MOU−MS/ERGO−PS2	2	MOUSE, SERIAL (0WY55) (vendor item dwg 2200014−203or 2200105−203) (65685) (ALT PN 141189−401)	0TZZ9	1	PAOZZ	B
68−5	34A11	247432−001	2	KEYBOARD (0WY55) (spec dwg 2200014−202 or 2200105−202) (0TZZ9) (ALT PN KEY−C/104ENH)	65685	1	PAOZZ	A
	32A11	KEY−C/104ENH	2	KEYBOARD (0WY55) (spec dwg 2200014−202 or 2200105−202) (65685) (ALT PN 247432−001)	0TZZ9	1	PAOZZ	B
68−6	34CP1 * 32CP1	EVNBMCX	2	ADAPTER, SERIAL (7Z797) (ALT PN CC04133) (0WY55) (vendor item dwg 2200025−201)	59951	1	PAOZZ	
68−7	34A12 *	ME210	2	ADAPTER, NULL MODEM (0WY55) (vendor item dwg 2200021−201)	59951	1	PAOZZ	A
	32A12 *	CBCC200605	2	MODEM, NULL (7Z797) (ALT PN 2200106) (0WY55) (spec dwg 2200106−201)	59951	1	PAOZZ	B
68−8	CP1 *	769−9654	2	JACK, DUPLEX (0WY55) (vendor item dwg 2200019−201)	2S518	1	PAOZZ	
68−9	34J1 32J1	1218758−102	2	POWER STRIP	56232	1	PAOOO	
	NOTE * : NOT SHOWN							

Section II. Maintenance Parts List

FIGURE AND INDEX NO.	REF DES	PART NUMBER	INDENT	DESCRIPTION	CAGE CODE	QTY PER ASSY	CODES SMR	CODES USABLE ON
68−10	34W900 *	1218795−304	2	CABLE ASSEMBLY	56232	1	PAOOO	A
68−11	34W901 *	1218795−305	2	CABLE ASSEMBLY	56232	1	PAOOO	A
68−12	32W905 *	2320078−301	2	CABLE ASSEMBLY	56232	1	PAOOO	B
68−13	32W906 *	2320079−301	2	CABLE ASSEMBLY	56232	1	PAOOO	B
68−14	34W902 *	2320002−304	2	CABLE ASSEMBLY, 120”	0WY55	1	PAOZZ	A
68−15	32W900 *	2320002−306	2	CABLE ASSEMBLY, 120”	0WY55	1	PAOZZ	B

USABLE ON CODES

A − SINGLE CHANNEL

B − NWS REDUNDANT

NOTE * : NOT SHOWN

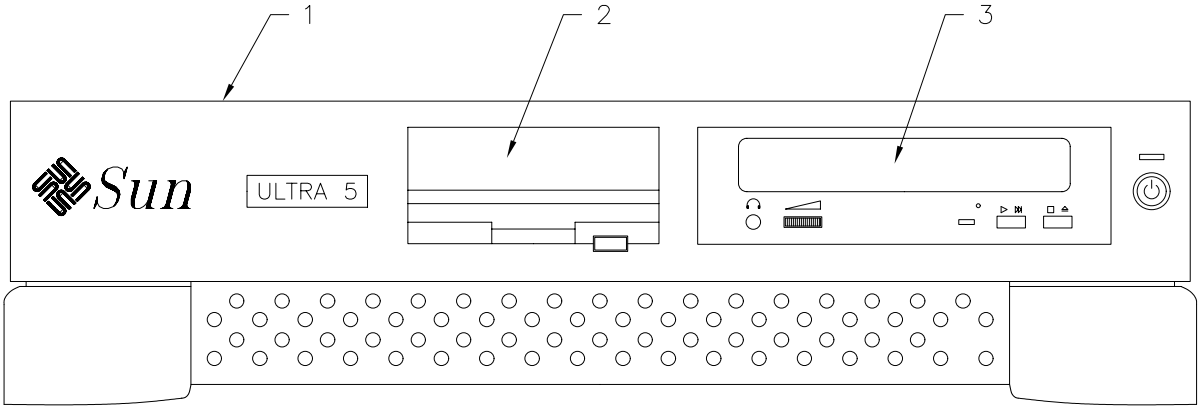

FRONT VIEW

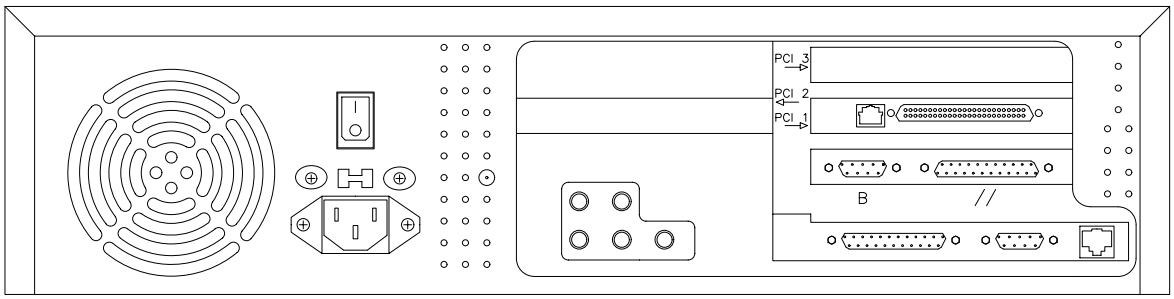

REAR − LOCAL/REMOTE BDDS PROCESSOR
(UD 70A1 / UD 72A1)

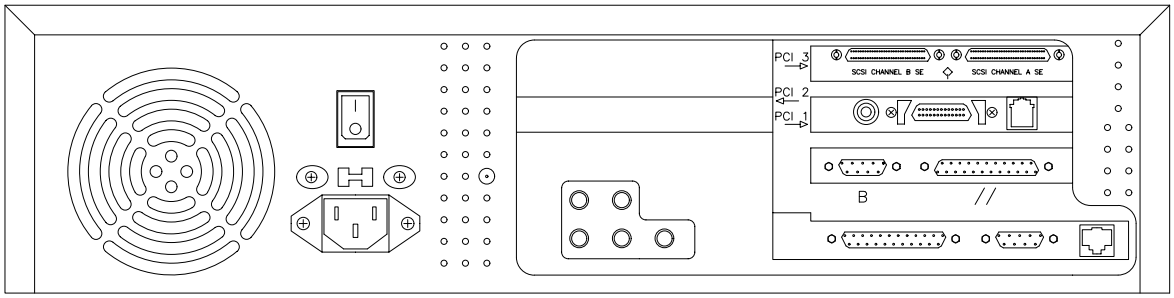

REAR − MSCF PROCESSOR
(UD 71A1)

NX1775

FIGURE 69. MSCF Processor Assembly (UD71A1), UD70A1, and UD72A1

FIGURE AND INDEX NO.	REF DES	PART NUMBER	INDENT	DESCRIPTION	CAGE CODE	QTY PER ASSY	CODES SMR	CODES USABLE ON
69−	71A1	2300015−3XX	1	MSCF PROCESSOR ASSEMBLY (For NHA see FIGURE 67 on Page 2 − 481)	0WY55	REF	PAODD	
69−1	71A1A1 **	A21UJC1A9P−C256CP	2	ULTRA 5 (0WY55) (spec dwg 2210009−202) (To replace, order next higher assembly)	7X430	1	PAODD	
69−2	71A1A1A2	370−3159−01	2	3.5 INCH FLOPPY DRIVE (0WY55) (source ctrl dwg 2210009−207 or 2210017−207)	7X430	1	PAOZZ	
69−3	71A1A1A3	370−3694−01	2	CDROM DRIVE, 32X (0WY55) (source ctrl dwg 2210009−208 or 2210017−208)	7X430	1	PAOZZ	
69−4	71A1A1A4 *	370−3693−01 OR 370−4348−01	2	HARD DISK DRIVE, 9GB OR GREATER (0WY55) (spec dwg 2210009−209 or 2210017−209)	7X430	1	PAOLD	

NOTE * : NOT SHOWN

NOTE ** : TO REPLACE, ORDER NEXT HIGHER ASSEMBLY

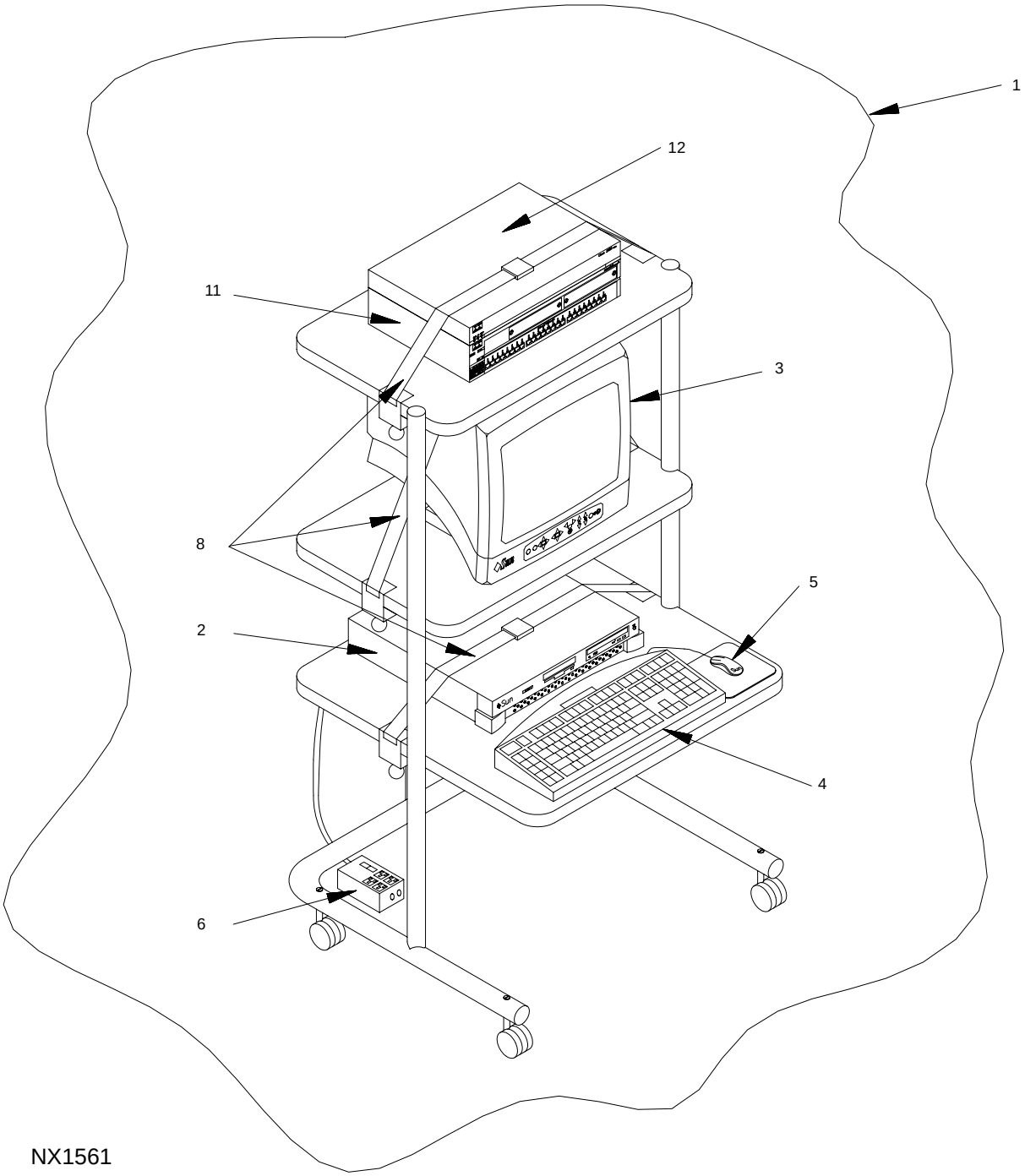

FIGURE 70. Remote BDDS Group (UD72, UD73, and UD74) (Sheet 1 of 2)

CABLE ASSEMBLIES (NOT SHOWN)

INDEX NO.	REF DES	FROM	TO	USABLE ON CODE
70−9	72W191	P1(72E1)	P2(72A1A1 POWER)	
70−10	72W192	P1(72E1)	P2(72A2 POWER)	

FIGURE 70. Remote BDDS Group (UD72, UD73, and UD74) (Sheet 2 of 2)

FIGURE AND INDEX NO.	REF DES	PART NUMBER	INDENT	DESCRIPTION	CAGE CODE	QTY PER ASSY	CODES SMR	CODES USABLE ON
70−	*	2300009−3XX	1	REMOTE BDDS GROUP	0WY55	REF	XC	
70−1	72	2300022−301	2	REMOTE BDDS WORKSTATION (For NHA see FIGURE 63 on Page 2 − 445)	0WY55	1	XC	
70−2	72A1	2300015−3XX	3	BDDS ASSEMBLY (For breakdown see FIGURE 65 on Page 2 − 477)	0WY55	1	PAODD	
70−3	72A2	X7143A	3	MONITOR, 17” (0WY55) (spec dwg 2210035−201)	7X430	1	PAODD	
70−4	72A3	320−1272−01	3	KEYBOARD (0WY55) (source ctrl dwg 2210009−203 or 2210017−203)	7X430	1	PAOZZ	
70−5	72A4	370−3631−01	3	MOUSE (0WY55) (source ctrl dwg 2210009−204 or 2210017−204)	7X430	1	PAOZZ	
70−6	72E1	ISOTEL4	2	SURGE SUPPRESSOR (0WY55) (vendor item dwg 2200020−201)	65836	1	PAOZZ	
70−7	72MP1 **	2200084−201	2	BDDS TABLE	0WY55	1	XB	
70−8	72MP10	2200084−204	2	STRAP, BDDS TABLE	0WY55	3	PAOZZ	
70−9	72W191 **	2320049−303	2	CABLE ASSEMBLY	0WY55	1	PAOZZ	
70−10	72W192 **	2320049−303	2	CABLE ASSEMBLY	0WY55	1	PAOZZ	
70−11	73	2210015−201	2	LAN SWITCH	0WY55	1	PAOLD	
70−12	74	2300020−301	2	ROUTER ASSEMBLY, REMOTE BDDS	0WY55	1	PAOLD	

NOTE * : OPTIONAL FOR DOD AND FAA

NOTE ** : NOT SHOWN

Section III. Numerical Index

PART NUMBER	FIGURE AND INDEX NO.
00005−01	38−6
0005390013	31−5 32−5
0005390015	31−6 32−7
0005390016	32−6
0011796	44−23
0015434606	32−11
001725	42−21 44−22
002202	41−4
0022646002	31−14 32−17
004−0272619	33−7
0060157001	31−15 32−18
01−W3840B−01	22−2
0100101−00	48−12
01060912	13−11
011−0049−01	2−23 2−49
0110020−01	48−11
016−1665−00	67−27
016−1803−01	67−29
016−1804−00	67−31
016−1805−00	67−30
016−1806−00	67−32
016−1839−00	67−24
016−1841−00	67−26
016−1842−00	67−28
016−1843−00	67−25
02−10−202−10	53−2 56−11
020−98655−001	42−28 44−30
028254	17−18 20−10 20−17 46−20 64−3
028422	26−7 27−3
030−1952−002	2−251
030−1953−000	2−95 2−151 2−199 19−52 19−85 19−92 45−72
0310103−01	50−30
031512−JQ24KOX	54−33
035−018	38−3
035D−RSP	38−3
06450−M	27−11
075−20028−16	42−6 42−14 44−6 44−14
075−20028−18	42−5 42−13 44−5 44−13
080888S−S1−SH	64−72
09−144F01MXXRXX	20−40 46−40
09−227F00MXXRXX	21−6
1−480702−0	25−15
1−745253−6	22−6
1−839564−8	15−15
1/4 20 B&S	11−13
10−242999−62	3−72
10−36675−28	4−23
10−40450−18S	20−89
10−40450−24S	20−304
10−40450−28	4−23
10−40450−28S	20−88
10−40450−36S	20−93
100−0055−001	46−5
100−1147−001	46−3
1000−426	33−37 33−44
101073070−001	59−1
101073071−001	60−1
101073072−001	54−20
101073073−001	54−12
101073074−001	54−18
101614807	54−32
101614810−002	54−22 58−
101614820	54−16 59−
101614828	54−39 55−
101614841	53−5 60−
101614945	57−1 57−6 57−11
101614955	54−17
101614963	54−5
101619986	51−57 62−
102387−4	20−140 20−143
1025616	11−13
10262	51−30 51−34
10278	33−3 35−19 40−10 51−23
102791−12	25−3 43−3
1028697	11−18
1030−20220−1026	17−26 20−359 46−188
103000833	54−24
1030QD3	27−8
10382000004	51−44
1042E+T	46−27
10514	51−25
106463	50−32
10877	33−15 35−8 40−5 51−68 51−69
1094A	38−8
10989	51−14 51−15 51−18
11−203	58−5 59−8
110	16−19
11050	51−44
11058	51−45
11364	2−13 33−58

Section III. Numerical Index

PART NUMBER	FIGURE AND INDEX NO.
1138−20	4−29
11576	51−1
11577	51−2
116A21TS	39−11
11974	51−8 52−
11975	51−41
11976	51−40
11977	51−39
11978	51−38
11979	51−37
11985	33−48 35−32 35−34 35−37 51−65 51−67
11990	51−46
120104103−001	54−1
120111010	55−1
120308037−001	54−36
120325001	59−4
120515017−001	58−1
120515018−001	59−3
120519018−001	54−25 57−3 57−8 57−13
121002	19−102
1213202−301	19−6
12133705−301	20−165
12133705−302	20−169
1213451−201	20−358
1213451−202	20−358
1213451−203	20−358
1213451−204	20−358
1213451−205	20−358
1213452−201	46−187
1213453−201	17−25
1213458−301	20−2 24−
1213460−XXX	1−26
1213461−XXX	1−31
1213462−301	2−73
1213463−301	2−80
1213464−XXX	1−35
1213465−301	2−85
1213466−301	2−89
1213468−301	2−103
1213469−301	2−107
1213469−302	2−107
1213469−303	2−107
1213470−301	2−112
1213470−302	2−112
1213470−303	2−112
1213471−301	2−116
1213471−302	2−116
1213471−303	2−116
1213472−301	2−119
1213473−301	2−122
1213474−301	2−126
1213475−301	2−130
1213476−301	2−138
1213476−302	2−221
1213476−303	2−138
1213476−304	2−138
1213476−305	2−138
1213477−XXX	1−40 1−57
1213479−301	2−188
1213479−302	2−188
1213479−304	2−188
1213480−301	2−206
1213480−302	2−206
1213480−303	2−206
1213481−202	2−208
1213485−301	3−17
1213488−301	18−73
1213489−301	18−39
1213490−301	18−43
1213491−301	19−45
1213492−301	18−47
1213493−301	17−46
1213495−301	19−55
1213496−301	17−47
1213497−301	17−48
1213498−301	19−58
1213499−301	17−49
1213500−301	17−50
1213502−301	20−159 23−9
1213503−301	20−145
1213504−301	20−147
1213506−301	19−62
1213507−301	19−65
1213508−301	18−55
1213509−301	19−68
1213510−301	19−71
1213511−301	18−58
1213512−301	18−61
1213513−301	18−64
1213514−301	18−67
1213515−301	19−74
1213516−301	19−77
1213517−301	19−80
1213518−301	19−83
1213519−301	19−87
1213520−301	19−90
1213521−301	19−94
1213522−301	17−52
1213524−302	20−149
1213524−303	20−149
1213525−301	20−151
1213526−301	2−134
1213527−201	17−44
1213528−201	18−70
1213528−202	18−71
1213528−203	19−20
1213528−204	19−21
1213528−205	19−22
1213528−206	19−23
1213528−207	19−24
1213528−208	19−25
1213528−209	17−35
1213528−210	19−26
1213528−211	19−27
1213528−212	18−72
1213528−213	19−28
1213528−214	19−29
1213528−215	19−30

Section III. Numerical Index

PART NUMBER	FIGURE AND INDEX NO.
1213528−216	19−31
1213528−217	19−32
1213528−218	19−33
1213528−219	19−34
1213528−220	19−35
1213528−222	19−36
1213529−201	19−38
1213529−202	19−39
1213529−203	19−40
1213529−204	19−41
1213529−205	19−42
1213529−206	19−43
1213529−207	17−38
1213529−208	19−44
1213530−201	17−39
1213530−202	17−40
1213530−203	17−42
1213530−204	17−43
1213530−205	17−45
1213531−201	19−37
1213531−202	17−41
1213533−301	18−22
1213534−301	18−23
1213535−201	17−28
1213535−202	17−27
1213535−203	3−71
1213536−201	17−29
1213536−202	17−30
1213537−201	18−24
1213537−202	18−25
1213537−203	17−34
1213537−204	17−36
1213537−205	17−37
1213539−301	18−26
1213541−301	18−27
1213542−301	18−28
1213543−301	18−29
1213544−201	17−31
1213544−202	17−32
1213546−301	18−30
1213547−301	18−31
1213548−301	18−32
1213549−301	18−33
1213550−301	18−34
1213551−301	18−35
1213552−301	18−36
1213553−301	18−37
1213558−301	18−38
1213559−201	17−33
1213562−302	20−85
1213563−301	20−90
1213564−301	20−94
1213564−302	20−412
1213566−301	20−96
1213567−301	20−99
1213568−301	20−101
1213570−301	20−103
1213570−302	20−106
1213572−301	20−109
1213573−301	20−112
1213574−302	20−117
1213574−XXX	20−115
1213577−XXX	20−120
1213580−301	20−128
1213582−301	20−131
1213585−301	20−137
1213586−301	20−139
1213588−301	20−302
1213589−301	20−305
1213590−301	20−142
1213591−304	1−45
1213591−310	1−47
1213591−313	1−49 2−174
1213591−314	1−51 2−177
1213591−336	34−32
1213591−344	34−36
1213591−357	34−37
1213591−367	34−38
1213591−510	2−170
1213591−511	2−172
1213591−514	2−174
1213591−515	2−177
1213593−XXX	20−1 23−
1213597−301	20−9
1213614−201	13−8
1213615−201	19−9
1213615−202	19−8
1213616−201	19−1
1213617−XXX	18−2
1213618−201	4−9
1213619−201	19−2
1213621−201	18−3
1213622−201	18−13
1213623−201	4−6
1213624−201	4−8
1213625−201	3−9 3−10 18−8
1213626−201	2−20 2−46
1213627−201	4−45
1213628−201	3−14
1213629−201	18−6
1213630−201	2−33 2−58
1213630−202	2−33 2−58 4−50
1213631−202	2−27 2−53
1213632−201	2−31 2−56
1213633−201	18−11
1213634−201	17−13
1213634−2XX	17−14
1213635−201	18−7
1213636−201	19−3
1213637−201	19−4
1213638−201	19−5
1213638−202	19−11
1213638−203	19−10
1213639−201	18−17
1213640−201	18−12
1213641−201	19−7
1213642−201	18−16
1213644−201	46−22

Section III. Numerical Index

PART NUMBER	FIGURE AND INDEX NO.
1213645−201	64−62
1213646−201	18−15 19−13
1213647−201	18−14
1213648−201	19−14
1213656−XXX	2−34 2−59
1213657−201	2−28 2−29 2−54 4−52
1213657−202	4−52
1213657−203	4−52
1213658−201	2−21 2−47 3−7
1213659−202	2−19 4−53
1213660−201	2−7 2−8 31−
1213661−201	3−11
1213666−301	45−7 50−
1213666−302	45−7 50−
1213667−201	50−7
1213667−202	50−9
1213668−201	45−8
1213669−XXX	18−2
1213674−201	4−43 4−44
1213675−201	17−3
1213675−203	20−15
1213675−204	17−7
1213675−205	20−5
1213675−208	17−5
1213675−209	17−11
1213675−211	20−13
1213675−213	17−1
1213675−215	20−11 64−65
1213675−217	17−9
1213677−301	20−161
1213678−301	20−337
1213680−301	1−9 1−11 2−66
1213706−301	20−308
1213710−301	50−10
1213710−302	50−10
1213714−XXX	17−16 18−
1213715−301	17−17
1213715−302	17−17
1213715−XXX	19−
1213717−101	19−18
1213720−302	2−211
1213733−301	19−50
1213758−XXX	1−1 2−
1213772−301	2−184
1213772−302	2−186
1213772−303	2−184
1213772−304	2−186
1213772−305	2−184
1213772−306	2−186
1213776−301	2−32 2−57
1213777−303	1−13
1213777−305	1−13 1−14
1213778−301	1−7 1−8 1−9 2−37
1213778−302	1−7 1−11 1−12 1−13 1−14 1−15 1−16
1213778−305	1−11
1213778−306	1−13 1−15 1−17
1213778−308	1−7 1−8 2−64
1213778−309	1−9
1213778−310	1−11 1−12 2−37
1213778−311	3−8
1213778−312	1−9
1213778−313	1−12 1−13
1213778−316	1−10
1213778−317	1−10 1−11 1−14
1213778−318	1−7
1213778−319	1−13 1−14 1−15 1−16 1−19
1213778−320	1−10 1−14 1−15
1213778−325	1−7
1213778−329	1−10 2−67
1213778−330	1−12 2−68
1213778−331	1−8 2−65
1213779−201	1−7 1−8 1−14 2−36
1213779−202	2−36
1213823−201	46−6
1213823−202	64−54
1213826−201	46−16 64−61
1213826−202	46−17
1213827	46−24
1213827−201	46−24
1213829−201	17−18 20−10 20−17 46−20 64−3
1213830−301	46−140
1213830−302	46−143
1213830−303	46−146
1213830−304	46−149
1213830−307	20−179
1213830−308	20−182
1213830−309	20−185
1213830−310	20−188

Section III. Numerical Index

PART NUMBER	FIGURE AND INDEX NO.
1213831−201	20−21 64−4
1213832−201	17−72 20−18 46−19 64−2 64−64
1213847−201	46−23
1213847−202	64−63
1213850−201	46−51 64−70
1213874−101	20−336
1213877−201	1−25
1213887−102	64−53
1213893−303	46−190
1213909−202	30−10
1213932−202	18−9
1213933−201	17−22 20−81
1213933−202	17−23 20−82
1213934−301	2−142
1213934−302	2−142
1213934−303	2−142
1213935−301	2−144
1213935−303	2−144
1213943−201	20−119 46−117
1213948−201	17−24
1214488−201	2−201 20−299
1214490−201	2−14
1214498−210	2−111
1214498−211	2−156 34−44
1214498−214	2−137
1214498−218	1−39
1214498−222	1−44 1−62 2−140 2−223
1214498−231	20−418
1214498−233	2−141 2−224
1214498−239	2−114
1214505−201	46−2
1214505−202	46−1
1214505−203	46−3
1214505−204	46−4
1214505−205	46−5
1214506−201	46−7
1214524−201	45−65
1214547−301	17−53
1214548−201	1−67 34−58
1214550−201	1−77
1214550−204	1−76
1214551−201	1−78
1214556−201	3−70
1214559−305	63−4 68−
1214559−313	63−5 68−
1214560−1XX	67−15
1214567−201	2−226 2−228 3−18 3−21 3−24 3−27
1214567−202	1−46 1−48 1−50 1−52 1−64 1−66 2−171 2−173 2−175 2−178 2−179 34−33
1214623−201	18−1
1214623−202	18−10
1214647−201	17−75
1214650−201	17−19
1214651−301	46−84
1214651−302	46−87
1214651−303	46−90
1214651−304	46−93
1214651−305	46−96
1214651−306	46−99
1214652−301	46−102
1214652−302	46−170
1214653−301	46−107
1214654−301	46−121
1214656−XXX	46−116
1214658−XXX	46−112
1214663−201	18−21 19−17
1214745−301	46−78 46−124
1214745−302	46−81 46−124
1214745−303	46−128
1214745−304	46−132
1214745−305	46−132
1214745−306	46−132
1214745−307	46−132
1214747−301	20−352
1214751−301	46−75
1214753−301	20−353
1214753−302	20−354
1214756−302	20−173
1214756−303	20−134
1214756−304	20−393
1214756−305	20−394
1214757−312	45−15
1214760−201	17−77
1214765−204	3−12
1214768−202	2−26 2−52
1214777−XXX	1−2 3−
1214778−XXX	2−5 20−
1214780−XXX	45−
1214782−201	45−6
1214783−201	45−11 67−33
1214788−201	18−19
1214793−301	2−76
1214794−301	46−184
1214794−302	20−355
1214794−303	20−356
1214807−301	45−18
1214807−302	45−22
1214807−303	45−26
1214807−304	45−30
1214807−305	45−34

Section III. Numerical Index

PART NUMBER	FIGURE AND INDEX NO.
1214807−306	45−38
1214807−310	45−86
1214807−311	45−88
1214807−312	45−90
1214808−301	45−42
1214808−XXX	45−47
1214811−XXX	45−52
1214816−XXX	45−58
1214817−XXX	45−61
1214818−301	45−63
1214819−301	45−66
1214822−301	45−73
1214822−302	45−73
1214826−XXX	45−75
1214841−202	1−7 1−12 1−13 1−14 1−15 1−16 1−18 2−63
1214845−242	20−387
1214845−264	20−385
1214845−265	20−386
1214849−301	46−134
1214871−313	20−218
1214871−331	20−395
1214878−301	17−81
1214879−301	17−87
1214880−301	46−139
1214881−301	17−91
1214882−301	17−93
1214883−301	17−54
1214883−302	17−58
1214883−304	17−64
1214889−301	17−51
1214904−XXX	34−3 34−28 42− 44−
1214913−201	20−180 20−183 20−186 20−189 20−314 20−321 46−141 46−144 46−147 46−150
1214918−201	2−15
1214919−201	2−16
1214920−201	2−17
1214923−201	17−21
1214923−202	17−21
1214923−203	17−21
1214924−205	2−133
1214924−206	2−115
1214925−301	20−191
1214926−301	20−193
1214938−301	1−8 1−9 1−10 1−11 1−13 2−69
1214956−202	24−10
1214956−203	24−4 24−9
1214956−204	24−5 24−6
1214956−205	24−6 24−7 24−9
1214957−204	24−8
1214959−301	17−68
1215043−204	3−72
1215108−301	19−12
1215185−201	20−22
1215191−201	20−346
1215200−XXX	1−
1215201−XXX	1−
1215202−XXX	1−
1215203−XXX	1−
1215204−XXX	1−
1215206−XXX	1−1 2−
1215207−XXX	1−1 2−
1215228−201	17−80
1215262−301	17−96
1215264−201	26−15
1215265−301	17−99
1216497−301	2−35 2−60
1217025−201	2−9
1217025−202	2−10
1217027−301	18−51
1217030−301	2−213
1217031−201	2−299
1217032−242	2−88 2−101 2−106 2−118 2−121 2−125 2−129 2−132
1217032−252	2−102 2−220
1217035−201	2−7 2−8 32−
1217038−301	34−41
1217041−303	2−152
1217041−305	2−152
1217044−201	23−2
1217045−201	2−185 2−187 2−189 3−19 3−25 3−28
1217045−203	2−176 2−180
1217046−201	64−52
1217047−XXX	34−1
1217053−201	46−120
1217062−201	20−140 20−143
1217071−101	1−2
1217073−201	1−21
1217073−202	1−22 34−4 34−31
1217073−203	1−23
1217073−204	1−24
1217074−301	20−347

Section III. Numerical Index

PART NUMBER	FIGURE AND INDEX NO.
1217074−302	17−107 20−349
1217074−303	20−348
1217074−304	17−108
1217074−308	20−350
1217074−309	20−351
1217074−311	17−109 20−84
1217074−312	20−83
1217074−313	64−32
1217074−315	46−54
1217074−316	17−112
1217074−317	17−110
1217074−318	17−111
1217074−319	4−56
1217076−206	20−89
1217076−209	20−304
1217076−210	20−88
1217076−212	20−93
1217077−201	17−76
1217078−201	17−78
1217078−202	17−79
1217081−301	17−104
1217081−302	20−19 46−185
1217081−303	20−20 46−186
1217083−301	2−299
1217084−201	13−10
1217084−202	13−11
1217086−301	2−38
1217087−301	2−39
1217116−201	18−4
1217124−301	1−
1217677−301	1−
1217677−302	1−
1217681−202	34−34
1217696−301	20−357
1217740−XXX	34−
1217743−201	3−13
1217745−301	1−8
1217758−203	50−5
1217775−201	34−39
1217775−202	34−40
1217775−203	34−22
1217775−204	34−23
1217776−303	34−5
1217776−304	34−35
1217777−302	34−8
1217779−301	34−11
1217781−201	34−25 34−30
1217789−301	2−98
1217798−301	2−218
1217802−301	2−268
1217802−302	2−271
1217802−303	2−273
1217802−304	2−275
1217802−305	2−277
1217802−306	2−280
1217802−307	2−283
1217802−308	2−285
1217802−309	2−288
1217802−311	2−291
1217803−201	33−36 33−40 33−43
1217822−301	46−52
1217822−302	64−68
1217823−301	1−68
1217823−302	1−71 34−55
1217823−305	34−56
1217823−306	34−57
1217823−307	4−57
1218124−301	2−301
1218186−201	2−24 2−50
1218189−201	50−32
1218201−301	45−55
1218206−201	2−23 2−49
1218208−201	2−181
1218208−202	2−183
1218208−203	2−182
1218215−201	19−102
1218221−XXX	1−53
1218224−301	20−200
1218224−302	20−416
1218225−301	20−197
1218226−XXX	20−2 24−
1218228−201	24−18
1218259−201	45−10
1218264−101	19−100
1218266−101	19−99
1218267−201	19−101
1218725−301	45−77
1218739−201	50−33
1218745−201	50−44
1218745−202	46−26
1218755−301	46−53
1218758−101	20−74 50−34 50−35
1218758−102	67−13 68−9
1218764−201	20−217 34−48 34−52 46−110 46−136 46−159
1218764−202	2−96 2−150 2−193 2−198 2−250 2−254 2−258 2−262 2−266 20−164 20−168 20−172 20−205 20−209 20−216 20−228 20−233 20−237 20−244 20−255 20−259 20−273 20−277 34−61 46−154

Section III. Numerical Index

PART NUMBER	FIGURE AND INDEX NO.
1218764−203	20−157
	20−178
	20−220
	20−223
	20−227
	20−232
	20−264
	20−269
	20−280
	20−283
	20−287
	20−292
	20−296
	46−105
	46−156
	46−161
	46−169
	46−173
	50−42
1218764−204	1−39
	20−407
	20−414
	45−71
	46−123
	46−183
1218764−205	1−44
	1−61
	2−162
	2−167
	20−411
	46−119
1218765−201	2−95
	2−151
	2−199
	19−52
	19−85
	19−92
	45−72
1218766−202	2−251
1218767−201	18−53
	19−84
	46−109
	46−113
1218767−202	2−94
	2−148
	2−197
	19−91
	20−135
	20−162
	20−166
	20−170
	20−174
	20−203
	20−207
	20−212
	20−226
	20−231
	20−236
	20−249
	20−253
	20−257
	20−262
	20−267
	20−285
	20−290
	20−298
	34−19
	45−43
	45−48
	45−99
	46−153
1218767−203	19−51
	45−44
	45−49
	46−104
	46−137
	46−168
	46−172
1218767−204	20−406
	46−77
1218767−205	2−159
	2−165
	20−410
	45−64
	45−67
1218768−201	18−52
	20−213
	20−409
	45−59
	45−62
	46−108
	46−135
	46−158
1218768−202	2−192
	2−248
	2−253
	2−257
	2−261
	2−265
	19−47
	20−163
	20−167
	20−171
	20−204
	20−208
	20−214
	20−235
	20−240
	20−242
	20−248
	20−252
	20−258
	20−272
	20−275
	34−46
	34−50
	34−60
	45−100
	46−164
1218768−203	19−53
	20−136
	20−155
	20−160
	20−175
	20−177
	20−219
	20−222
	20−225
	20−230
	20−263
	20−268
	20−279
	20−282
	20−286
	20−291
	20−295
	23−10
	45−53
	45−60
	45−76
	46−103
	46−155
	46−160
	46−167
	46−171
	50−40
1218768−204	20−405
	45−70
	45−74
	46−76
	46−122
	46−182

Section III. Numerical Index

PART NUMBER	FIGURE AND INDEX NO.
1218768−205	20−156 46−80 46−83 46−118 46−126
1218769−201	46−79 46−82 46−125
1218770−201	2−160 2−166 2−249 45−65 45−68 46−130 46−133 46−165
1218771−201	45−54
1218771−202	46−163
1218773−201	46−131
1218774−201	46−129
1218779−201	46−111 46−115
1218779−202	46−106 46−138 46−174
1218779−204	20−158 46−127
1218780−201	20−210 20−238 20−243 20−250 20−254 20−260 20−265 20−270 20−276 20−288 20−293 20−300 34−21
1218780−202	20−215
1218795−304	68−10
1218795−305	68−11
1218807−302	2−297
1218807−XXX	34−26
1218809−301	1−
1218811−201	45−21 45−25 45−29 45−33 45−37 45−41 45−81 45−83 45−85 45−87 45−89 45−91 45−93 45−95 45−97 46−85 46−88 46−91 46−94 46−97 46−100
1218817−319	45−80
1218817−322	45−92
1218817−323	45−94
1218817−324	45−96
1218817−XXX	45−20 45−24 45−28 45−32 45−36 45−40 45−82 45−84
1218818−302	45−50
1218818−XXX	45−45
1218819−XXX	45−52
1218820−XXX	45−58
1218821−XXX	45−61
1218823−301	45−63
1218823−302	45−66
1218824−301	45−73
1218824−302	45−73
1219650−XXX	45−75
1219651−301	2−93
1219663−303	34−14
1219663−304	34−15
1219667−XXX	1−2 3−
1219668−201	46−86 46−89 46−92 46−95 46−98 46−101
1219700−302	34−59
1219716−301	45−13
1219716−303	45−14
1219726−301	45−98
1219726−302	45−98
1219727−301	50−39
1219728−301	46−162
1219729−301	46−157
1219730−301	46−152
1219731−301	46−166
1219733−201	46−25
1219734−201	46−14 64−60
1219738−202	46−9
1219738−203	46−10 64−44
1219738−206	46−11 64−45
1219738−209	64−42
1219738−210	64−43
1219738−213	46−9
1219739−201	20−70
1219739−204	46−177 46−178
1219739−207	46−12 64−48 64−49
1219739−209	46−13 64−46
1219739−210	46−12 64−46 64−47 64−50
1219739−211	67−9
1219739−214	46−13
1219742−201	20−73
1219745−XXX	45−1 46−
1219747−XXX	45−
1219748−204	20−111 20−114
1219749−204	20−105 20−108 20−130
121XK21−2	5−19
1221207−XXX	1−1 2−
1221208−201	46−27

Section III. Numerical Index

PART NUMBER	FIGURE AND INDEX NO.
1221208−202	46−27
1221220−301	20−154
1221221−301	20−176
122130089−001	54−31
122160001−001	61−6
122160023−002	56−7 56−8 56−9
122160037−001	54−26
1221793−201	3−22
1221796−301	3−30 8−28 9−17
1221796−302	9−14
1221796−303	3−29
1221797−303	3−45
1221797−304	3−97
1221797−305	3−101
1221797−306	3−92
1221798−303	3−16
1221798−304	3−20
1221798−305	3−23
1221798−306	3−26
1221798−309	1−63 2−225
1221798−310	1−65 2−227
1221815−201	64−1
1221816−201	64−33
1221821−XXX	2−5 2−6 20−
1221822−301	20−234
1221822−302	20−239
1221825−XXX	45−1 46−
1221826−XXX	45−
1221866−301	20−308
1221867−301	20−312
1221870−301	45−15
1222301−201	20−76 34−27
1222301−202	20−77
1222301−203	20−79
1222301−204	20−78
1222303−301	17−62
1222324−201	46−8
1222325−301	46−181
1222327−301	20−251
1222328−301	20−241
1222328−304	20−274
1222329−301	20−247
1222332−302	2−200
1222341−201	2−298 67−16
1222342−301	20−316
1222344−XXX	1−1 2−
1222345−201	2−295 46−191
1222345−202	2−296
1222346−202	30−8 49−9
1222346−203	22−1 47−1
1222346−204	20−375 46−189
1222352−201	20−66
1222352−202	20−67
1222352−203	20−68
1222354−201	20−23
1222367−301	20−202
1222368−301	20−206
1222370−301	2−247
1222371−303	2−260
1222371−304	2−264
1222415−301	46−15 47−
1222416−301	22−
1222416−302	22−
1222416−XXX	20−80
1222418−202	22−12
1222418−203	47−8
1222419−202	22−13
1222420−202	22−11
1222420−203	47−7
1222421−204	47−2
1222423−302	47−3
1222424−301	22−3
1222975−301	1−
1222A10	8−15 10−32
1222A11	5−7
1222R2	5−6
1223103−201	22−4
1223103−202	22−6
1223111−201	22−5
1223111−202	22−7
1223117−202	47−4
1223119−201	67−6
1223120−201	20−69
1223120−202	20−69
1223233−201	47−5
1223377−301	20−234
1223377−302	20−256
1223378−301	20−221
1223378−305	20−425
1223379−301	20−224
1223379−302	20−229
1223379−303	20−229
1223380−301	20−261
1223380−302	20−266
1223380−303	20−284
1223380−304	20−289
1223381−301	20−278
1223381−302	20−281
1223382−301	20−211
1223383−301	20−294
1223384−301	20−297
1223418−301	2−252
1223418−302	2−256
1223419−302	20−271
1223729−301	2−62
1223729−302	2−61
1223730−301	1−9 2−70
1223733−301	2−41
1223734−301	2−42
1223735−301	2−43
1223736−301	2−44
1223736−302	2−44
1223746−201	3−48 3−96

Section III. Numerical Index

PART NUMBER	FIGURE AND INDEX NO.
1223751−301	20−310
1223754−301	2−55
1223755−301	2−45
1223757−301	1−
1223761−301	20−75
1223763−301	20−58
1223814−302	20−329
1223815−301	20−322
1223816−302	20−326
1223831−XXX	1−
1223842−301	20−311
1223843−301	20−319
1223850−301	2−190
1223862−301	2−202
1223870−301	3−67
1223870−302	3−105
1223893−301	34−45
1223893−302	34−49
1223966−301	1−
1224038−301	2−196
1224038−302	2−196
1224060−301	2−147
1224060−305	34−18
1224065−301	34−49
1224355−301	20−404
1224356−101	4−67 4−69
1224369−301	20−408
1224373−201	20−381
1224373−202	20−381
1224384−201	4−66 4−68
1224957−301	45−69
123109016−001	54−6
123115013−001	54−10
123209032−001	54−8
12379	51−32 51−36
124873	13−6
124874	13−5
124875	13−144
12647	51−19
126715	2−36
126B439H01	15−22
126B485H01	15−14
126B745H01	13−48
126B757H01	13−14
126B784H01	13−13
127101668−001	60−2
127235	3−3
127353	1−7 1−8 1−14 2−36
127B823G01	13−175
127B913H01	14−7
127B927H01	16−31
127B956G01	16−32
127B958H01	16−30
127B958H02	16−34 16−35
127B958H03	16−6
128102003	54−35
128102005	54−42
128103155−002	54−38
128208001−012	56−5
128208001−029	56−6
128304038−045	54−15
128304038−053	54−14
128304123	55−2
128304128−003	54−3
128307025−001	57−4 57−9 57−14
128402001	54−41 54−43
128C702BA070000	16−23
128C864H02	15−24
128C871H25	13−126
129101001−002	57−2 57−7 57−12
129101002−002	58−3
129201010−001	54−34
129202025−007	53−1 56−10 61−4
12V−219−R03J12MP85	22−11
12V−519−R09J12MP25	47−7
130103050	58−5 59−8
130913273	53−2 56−11
130913297−001	53−4
130913297−002	56−12 61−5
130914108−209	54−11
132204002	54−4
132208006	59−2
132208047−001	54−19 54−21
13222	51−63
13225	31−1 32−1
13226	31−2 32−2
13272	33−32 35−20 40−2 51−26
13523	51−22
13524	51−21
13547	33−6
13550	51−62
13614−1	35−24 35−25
13759−0001	18−7
1389802−302	24−1
1389860−201	3−3
1389863−301	3−4
1389864−301	3−5
1389864−302	3−5
138C507H04	16−9
138C864H01	13−89
139305015−001	60−4
139311001−001	60−3
14−127F00MXXRXX	20−57 46−50
14−847F00MXXRXX	25−20 43−18
140−2148	36−21
140104161−001	54−27
14110	51−9
141111016	62−1

Section III. Numerical Index

PART NUMBER	FIGURE AND INDEX NO.
141189−401	20−389 68−4
14126	31−9 32−12
141713001	58−4 59−7
141923173	59−5
141931005−01	55−3
141931005−03	55−5
141LS−2282	48−12
141LS−282	13−68
142218	15−32
142C524H02	13−115 13−120
142C692H07	15−3
142C816H07	14−12
142C816H08	14−11
142C846H02	13−39
143224023−001	57−5 57−10 57−15
143318022	58−2 59−6
14339	31−8 32−10
1446−261	5−28 8−32 10−36
145202083−001	54−28
145202084−001	54−29
145202085−001	54−30
145301065−001	60−6
145301065−002	60−7
1455−85	35−12
14636−5001−101	5−6
14636−5001−102	8−15 10−32
14636−5001−103	5−7
14636−5003−3	11−1
14636−5017−1	7−2
14636−5018−1	5−9 8−4 10−19
14701	31−7 32−9
149108041−001	54−13
149208341	54−37
149502000−001	54−2
1506ADC18−0GHZ	3−13
151101056−001	54−33
151201035−001	53−3
152507626	55−4
152508485−001	61−3
1525325−XXX	2−3 2−4 17−
1525326−XXX	45−1 46−
152600425−001	54−7 54−9
1526322−301	17−15
1526471−301	24−2
1526635−301	19−15
1526651−301	19−16
1526801−301	2−34 2−59
1526801−302	2−40
1526834−301	2−30 2−55
1529−1	39−12
15404	10−28
1542.1121	48−15
154C499H01	16−27
155C818A01	15−37
155C867G01	13−32
155C872H01	13−35
155C984H01	16−1 16−2
156C604H01	15−23
156C622H03	15−39
156C742A01	15−35
156C824H01	13−6
156C825H01	13−5
156C826H01	13−144
156C864H01	13−9
157−12500−14(441)	46−129
157−1869−501	46−131
157−32360	45−54
157−32500	46−163
157−72500−3	2−160 2−166 2−249 45−65 45−68 46−130 46−133
157−82500−3	46−79 46−82 46−125
157308581−001	61−2
157308676	56−1
157308677	56−2
157309761−001	56−3
157309761−002	56−4
15749	13−55 14−47
157C007H01	13−145
157C067H01	13−46
157C069H01	13−50
157C103H01	15−18
157C110H01	13−15
157C196G02	13−183
157C240G01	13−156
157C240G02	13−157
157C240G03	13−158
157C240G04	13−159
157C240G06	13−161
157C240G07	13−162
157C240G08	13−163
157C240G14	13−167
157C240G15	13−168
157C240G16	13−169
157C240G17	13−170
157C240G18	13−171
157C240G19	13−172
157C240G20	13−173
157C240G21	13−174
157C240G22	13−160
157C284G01	13−177
157C285G01	13−178
157C286G01	13−179
157C295H01	13−58
158C688G01	15−6
158C688G02	15−4

Section III. Numerical Index

PART NUMBER	FIGURE AND INDEX NO.
158C689G01	15−13
158C696G01	15−28
15901	51−52
159C544H01	16−33
159C545G01	16−29
159C554H01	16−28
159C557G01	13−164
159C557G02	13−165
159C557G03	13−166
159C561G01	16−26
159C564H01	16−25
159C595G01	13−180
159C596G01	13−176
159C632G01	13−107
16−063F01MXXRXX	21−6
16−1−11	14−43
16−10−213−14	13−19 13−29 13−31 13−41 13−43 13−81 13−87
16−10−411−14	14−40
16−10−413−14	13−16
16−237F02MXXRXX	20−41 20−49 46−41 46−45
16−328F02MXXRXX	20−41 20−49 25−7 46−41 46−45
161C244G01	13−130
161C244H01	13−130
161C275G01	13−66
161C276G01	13−67
161C424H01	13−60
161C755G01	13−105
1625	51−45
1631−01200−1	11−2
163901048−001	60−5

PART NUMBER	FIGURE AND INDEX NO.
17−1657−09	20−217 34−48 34−52 46−110 46−136 46−159
17−1657−15	2−96 2−150 2−193 2−198 2−250 2−254 2−258 2−262 2−266 20−164 20−168 20−172 20−205 20−209 20−216 20−228 20−233 20−237 20−244 20−255 20−259 20−273 20−277 34−61 46−154
17−1657−25	20−157 20−178 20−220 20−223 20−227 20−232 20−264 20−269 20−280 20−283 20−287 20−292 20−296 46−105 46−156 46−161 46−169 46−173 50−42
17−1657−37	1−39 20−407 20−414 45−71 46−123 46−183
17−1657−50	1−44 1−61 2−162 2−167 20−411 46−119
17−688F01MXXRXX	20−360 46−61

PART NUMBER	FIGURE AND INDEX NO.
17−704F01MXXRXX	20−361 46−62
17−705F00MXXRXX	20−362 46−64
17−706F05MXXRXX	20−363 46−65
17−709F02MXXRXX	20−364 46−66
17−783F00MXXRXX	20−376 46−58 46−59
17−786F00MXXRXX	20−365
17−834F00MXXRXX	25−11 43−11
17−835F00MXXRXX	20−377 46−74
17−852F02MXXRXX	20−374 46−55
17−854F00MXXRXX	20−26 45−2 50−6
17−873F00MXXRXX	25−12 43−12
17−926F02MXXRXX	20−378
17−928F00MXXRXX	25−13 43−13
17−989F02MXXRXX	20−379 49−17
17−989F04MXXRXX	20−369
17−989F07MXXRXX	20−370 46−71
17−989FXXMXXRXX	30−19
1700D0600−01	2−26 2−52
170M3415	57−4 57−9 57−14
1710009−01	50−31
171730X	12−1
171740X	12−14
171747X	12−8
171748X	12−11
171750X	3−2 12−
171789X	12−13
171791X	12−4
171864X	12−2

Section III. Numerical Index

PART NUMBER	FIGURE AND INDEX NO.
172560X	3−2 12−
172564X	12−5
172670X	3−1 12−10
172816X	12−1
173219X	12−9 12−12
17508	41−2
1800A−120Y	33−36 33−40 33−43
184−00016−00	20−37 46−32
18X18X1	33−49
191380	35−10
191381	35−10
191382	35−11
19331	2−7 2−8 31−
19413−8−0610	54−11
19948	33−27
1A20033G01	14−47
1A20033H10	13−55
1A20047H01	15−32
1A20260H04	13−118
1A20260H05	13−129
1A20295H01	13−182
1A20382H01	15−11
1A20683H02	13−19 13−29 13−31 13−41 13−43 13−81 13−87
1A20683H03	14−40
1A20768A01	13−26
1A20785H01	14−4
1A20787H01	16−21
1A20787H02	16−20
1A24988−W1	16−37
1A24988−W2	16−36
1A24988−W3	16−38
1A24988−W4	16−39
1A24988−W5	16−40
1A24988−W6	16−41
1A24988−W7	16−42
1A24988−W902	16−43
1A24988−W903	16−44
1A24988−W904	16−45
1A24988−W905	16−46
1A24988−W906	16−47
1A24988−W907	16−48
1A24988−W908	16−49
1A24988−W909	16−50
1A24988−W910	16−51
1A24988−W911	16−52
1A24988−W912	16−53
1A24988−W913	16−54
1A24988−W914	16−55
1A24988−W915	16−56
1A24988−W916	16−57
1A24988−W917	16−58
1A24988−W918	16−59
1A24988−W919	16−60
1A24988−W923	16−61
1C74−2	51−53 51−54
1D19766H03	13−2
1D20143G01	13−102
1D20332H04A	13−7
1D20420H01	13−70
1D20519H01	13−33
1D20520H01	13−34
1D20550H01	13−91
1D20550H02	13−93
1D20550H03	13−96
1D20550H06	13−99
1D20773H01	15−19
1D20931H01	14−30
1D20931H02	14−31
1D20931H03	14−32
1D20931H04	14−33
1D20931H05	14−34
1D20931H06	14−35
1D20931H07	14−36
1D20931H08	14−37
1D20931H09	14−38
1D20987G01	13−27 15−
1D20988H01	16−15
1D20989H01	16−11
1D20990G01	13−40
1D20992G01	13−17 14−
1D20993G01	13−28
1D20998G01	13−20
1D21168G01	16−13
1D21304G01	14−1
1D21464G01	15−26
1D21500G01	16−12
1D21525G02	14−2
1D22324G01	13−88
1D23102G01	13−83
1D23244G01	13−108
1D23315G01	13−116
1D23418H01	13−110
1D23732G01	13−109
1D23958G01	15−8
1D25712G01	15−9
1D27655G01	14−3
1D28364G01	14−44
1D28368G01	13−80
1D28370G01	2−1 2−2 13−
2−010−0142	33−26
2−010−0144	33−25
2−259N674−70	4−18
2−370N674−70	4−17
2021−6−8B	15−3
202660	30−8 49−9
2027−35	15−24
202760−52	30−20
2035−34−25	39−3
2043−2−14	39−2
2048−RG	39−4
2049−34T	39−5
204989−2	1−67 34−58

Section III. Numerical Index

PART NUMBER	FIGURE AND INDEX NO.
20505−1104−101	6−3
20505−2037−1	10−31
205205−2	22−4
205557−2	27−22
207−0007−209	35−30
20728−P1	2−19 4−53
20729	2−21 2−47 3−7
20732−P1	2−27 2−53
20733	2−20 2−46
2078−12−34	39−13
2100009−102	64−71
2100029−101	13−189
21055	20−70
21100	46−13 64−46
21102	46−12 64−48 64−49
21198A	35−38
2165−1A	54−4
217 3.15	25−10
217 3.17	43−10
2178−3816−58	39−20
21977	33−51
21X41X1	35−39
22−46642	20−358
22−49622	64−1
22−49660	64−33
22−52063	20−358
220−500−051	53−3
2200000−201	41−5
2200001−204	41−4
2200001−205	41−3
2200001−206	41−2
2200001−209	41−1
2200002−201	30−20
2200010−XXX	4−60 4−61
2200011−201	4−62
2200011−202	4−63
2200013−201	50−36
2200014−202	20−383 68−5
2200014−203	20−389 68−4
2200015−201	20−382 68−2
2200019−201	20−392 68−8
2200020−201	20−388 67−11 68−1 70−6
2200021−201	20−391 50−3 68−7
2200022−201	26−3
2200025−201	20−390 68−6
2200026−201	64−58
2200027−201	64−59
2200052−201	13−65
2200070−201	64−7 64−15 64−22
2200084−201	70−7
2200084−204	70−8
2200085−201	64−24
2200085−202	64−9 64−17
2200085−203	64−56
2200088−201	50−20
2200089−201	64−20
2200105−202	20−383 68−5
2200105−203	20−389 68−4
2200106	68−7
2200106−201	68−7
2200107−201	64−34
2200107−202	64−35
2200107−203	64−37
2200107−204	64−36
2210002−201	13−184
2210002−202	13−185
2210005−204	64−30
2210006−201	64−57
2210007−201	64−28
2210008−207	64−26 67−10
2210009−202	65−1 69−1
2210009−203	64−18 67−7 70−4
2210009−204	64−19 67−8 70−5
2210009−207	65−2 66−3 69−2
2210009−208	65−3 66−2 69−3
2210009−209	65−4 66−4 69−4
2210015−201	64−39 70−11
2210015−205	64−41
2210015−206	64−40 64−124
2210017−201	66−1
2210017−203	64−18 67−7 70−4
2210017−204	64−19 67−8 70−5
2210017−207	65−2 66−3 69−2
2210017−208	65−3 66−2 69−3
2210017−209	65−4 66−4 69−4
2210022−210	64−40 64−124
2210023−201	64−12
2210023−204	64−13
2210024−201	64−25
2210030−201	67−23
2210030−203	67−30
2210030−204	67−31
2210030−205	67−32
2210030−206	67−29

Section III. Numerical Index

PART NUMBER	FIGURE AND INDEX NO.
2210030−211	67−24
2210030−212	67−25
2210030−213	67−26
2210030−214	67−27
2210030−215	67−28
2210034−201	64−72
2210035−201	64−14 70−3
2210036−201	67−4
2210042−201	64−51
221M964	16−17
222009−201	34−39
222009−202	34−40
222009−203	34−22
222009−204	34−23
2235−A−XXXX	2−34 2−59
223557	37−66
223585	37−65
223604	37−57
223628	37−61
223676	37−45
22368	46−9
2237−A−00	2−31 2−56
22371	51−42
22374	64−43
223927	37−38
224001	22−1 47−1
224002	37−60
224012	37−46
224171	37−48
224236	37−67
224244	37−58
224255	37−47
224256	37−63
22559	51−31 51−35
2260B	17−19
2265−112−18	39−23
226531	37−72
22728	51−11
22798	51−64
22841	51−20
22942	51−16
22943	51−12
22992	51−66
22993	51−7
2300000−301	20−384 68−3
2300003−301	20−396
2300005−301	17−113
2300006−3XX	2−294 63−1 64−
2300007−3XX	67−
2300008−3XX	63−
2300009−3XX	70−
2300010−301	64−76
2300010−302	64−74
2300011−301	64−77
2300011−302	64−73
2300015−3XX	64−6 65− 67−2 69− 70−2
2300016−301	64−21 66−
2300017−301	64−29
2300018−301	64−75
2300020−301	70−12
2300022−301	63−6 70−1
2300023−3XX	63−2 67−1
2300024−301	63−3 67−22
2300025−302	64−10
2300025−303	64−10
2300026−301	64−38
2300026−307	64−38
2300027−301	64−11
2300028−301	20−384 68−3
2310000−301	41−11
2310000−302	41−12
2310001−301	41−7
2310001−302	41−8
2310002−301	41−9
2310002−302	41−10
2310009−301	13−63
2310010−301	64−69
2310011−301	67−3
2310012−301	67−6
2310014−301	64−55
2310062−01	48−10
2320000−301	41−6
2320002−301	20−421
2320002−302	20−402
2320002−304	68−14
2320002−305	20−424 63−122
2320002−306	68−15
2320002−307	20−423
2320002−308	20−403
2320002−309	20−422
2320003−301	26−16
2320004−301	13−186
2320006−301	17−114
2320007−301	20−399
2320008−301	20−397
2320009−301	20−398
2320010−301	13−187
2320011−301	13−188
2320013−302	20−400
2320016−301	64−118
2320027−301	64−80
2320027−302	64−81
2320027−303	64−82
2320028−301	64−83
2320028−302	64−84
2320028−303	64−79
2320030−301	64−99
2320030−302	64−98
2320032−301	64−101
2320034−301	64−5
2320036−301	63−12
2320036−302	63−13
2320036−303	63−14
2320037−301	63−15

Section III. Numerical Index

PART NUMBER	FIGURE AND INDEX NO.
2320037−302	63−16
2320037−303	63−17
2320037−304	2−157 63−18
2320037−305	2−163 63−19
2320037−306	2−168 63−20
2320037−307	2−158 63−21
2320037−308	2−164 63−22
2320037−309	2−169 63−23
2320038−301	64−78
2320039−301	64−96
2320040−301	63−24
2320040−302	63−25
2320040−303	63−26
2320040−304	63−27
2320040−305	63−28
2320041−301	63−29
2320041−302	63−30
2320041−303	2−83 63−31
2320045−301	63−32
2320045−302	63−33
2320046−301	63−34
2320046−302	63−35
2320046−303	63−36
2320047−301	64−97
2320047−304	63−37 63−38
2320047−305	63−59 63−60 63−61 63−62
2320047−306	63−39 63−40
2320047−307	63−69 63−70
2320047−308	63−45 63−46 63−47 63−48 63−49 63−50 63−51 64−102 64−103 64−104 64−105 64−106 64−110 64−111 64−112
2320047−309	63−52 63−53 63−54 63−55 63−56 63−57 63−58
2320047−310	63−41 63−42 63−63 63−64 63−65
2320047−311	63−66 63−67 63−68
2320047−313	64−107
2320048−301	64−114 64−115 64−116
2320048−302	64−109
2320048−303	64−108
2320049−301	64−90
2320049−302	64−91 64−92 67−20
2320049−303	63−43 63−44 63−71 64−85 64−86 64−87 64−88 64−89 64−95 67−17 67−18 67−19 70−9 70−10
2320049−304	64−93
2320049−305	64−94
2320051−301	64−119 64−121
2320051−302	64−122
2320052−301	64−113
2320053−301	64−117 67−21
2320054−301	64−120 67−5
2320055−301	63−72
2320056−301	64−123
2320060−301	64−100
2320061−301	63−7
2320061−302	64−125
2320062−301	63−73
2320062−302	63−74
2320062−303	67−34
2320062−304	67−35
2320062−305	63−75
2320062−306	63−76
2320062−307	63−77
2320063−301	2−216 63−78
2320063−302	2−217 63−79
2320064−301	2−229 63−80
2320064−302	2−231 63−81
2320064−303	2−233 63−82
2320064−304	2−238 63−83
2320064−305	2−240 63−84
2320064−306	2−242 63−85
2320064−307	2−230 63−86
2320064−308	2−232 63−87
2320064−309	2−239 63−88
2320064−310	2−241 63−89
2320064−311	63−90
2320064−312	63−91
2320064−313	63−92
2320065−301	2−234 63−93

Section III. Numerical Index

PART NUMBER	FIGURE AND INDEX NO.
2320065−302	2−243 63−94
2320065−303	2−235 63−95
2320065−304	2−244 63−96
2320065−305	63−97
2320065−306	63−98
2320066−301	2−236 63−99
2320066−302	2−245 63−100
2320066−303	2−237 63−101
2320066−304	2−246 63−102
2320067−301	63−103
2320068−301	63−104
2320070−301	63−9 63−105
2320071−301	63−10
2320072−301	2−146 63−106
2320072−302	63−107
2320072−303	63−108
2320072−304	63−109
2320072−305	63−110
2320072−306	63−111
2320072−307	63−112
2320073−301	63−113
2320074−301	63−114
2320074−302	63−115
2320074−303	63−116
2320074−304	63−117
2320074−305	63−118
2320075−301	63−8
2320076−301	63−119
2320076−302	63−120
2320077−301	63−11
2320078−301	68−12
2320079−301	68−13
2320085−301	20−420
2320087−301	63−121
23272	51−10
23285	33−51
2330001−301	22−14
23301	33−51
23345	51−43
2367−A−00	2−33 2−58
2367−A−01	2−33 4−50
239001	20−28 45−4 50−2
239002	20−28 45−4 50−2
239050	37−15
239179	37−14
24−071F00MXXRXX	20−43 46−43
24−103F00MXXRXX	20−49 46−45
24−133F00	21−2
2400−A−01	4−6
24019	51−71
240978	37−42
2410ML04WB30−P00	22−12
241623	37−29
24340	35−6 51−29
24621	51−6
24622	51−27
24624	51−4
24624.1	51−5
24625	51−3
24628	51−17
24636−1105−101	26−12
24636−2024−1	5−8 8−12
24636−2028−101	8−2
24636−2088−1	5−5 8−10 10−20
24636−5004−1	4−16
247432−001	20−383 68−5
2500002−301	20−3 26−
2500003−301	2−1 2−2 13−
2500004−301	13−28
2500006−301	13−44 16−
2500007−301	16−3
2500008−301	13−42
2500010−301	13−82
2500012−301	13−130
2500015−301	13−12
2500016−301	13−62
2500017−301	13−59
2500020−301	13−20
2500021−301	37−49
2500022−101	15−35
2500024−301	22−11
2500030−301	64−31
2500031−301	33−46
253108	37−52
253329	37−71
255126	37−76
255750	37−25
255860	37−36
257081	37−34
25715	10−34
259391	37−53
25P−326R	33−38 33−42 33−45
26−064F00MXXRXX	20−46 46−47
26−249F00MXXRXX	20−45 46−46
26−295F04MXXRXX	25−18
26−303F02MXXRXX	25−17
26−304F01MXXRXX	25−16
26−347F01MXXRXX	20−47 46−48
26−351F02MXXRXX	46−73
26−351F07MXXRXX	20−373
26−386F01	20−367 46−69
26−40754	20−358
26−40755	46−187
26−40757	17−25
26−421F01	20−368 46−70

Section III. Numerical Index

PART NUMBER	FIGURE AND INDEX NO.
26−52986	20−358
26−52987	20−358
264390	37−41
268298	37−54
26975	46−177 46−178
269958	36−30 37−9
27−199F00MXXRXX	25−1 43−1
27−204F00MXXRXX	25−4 43−5
27−211F01MXXRXX	20−27 45−3 50−1
27−212F01MXXRXX	20−29 45−5 50−4
271662	37−43
273113	37−51
273404	37−59
273462	37−62
273463	37−64
273759	37−44
274−657	33−54
275−160210−04	54−19 54−21
2761K14	51−40
276691	37−68
28200	50−44
2825K51	51−41
282804	37−74
282816	37−73
282897	37−69
282898	37−70
28425	46−25
28478	46−26
284AC279−1	3−11
290090	37−50
291207	37−78
291740	37−77
291918	37−40
292364	37−75
292373	37−80
294306	35−1 37−1
294544	37−18
294563	37−4
294594	37−13
295281	37−12
295503	37−19
295597	37−20
296062	37−21
2E206	33−15 35−8 40−5 51−68 51−69
2E397	51−53 51−54
2E440A	40−4
2E441	35−5
3−1393137−2	37−8
3−87456−6	46−114
30−00087	20−78
30−00087−110V−1	64−36
300−3092	36−14
300−3093−01	36−16
300−3093−11	36−16
300−3094	36−17
300−3096	36−4
300−3164	36−5
300−3530	36−3
300−4069	36−12
3000UP	45−11 67−33
3001298−L	13−147
3001298−R	13−146
3010CSP−073	46−8
30182−2−4C	2−10
30182−4−4C	2−9
30505−1105−101	5−36
30505−1107−101	4−20
30505−1109−101	4−36
30505−1205−101	5−8 8−12 10−3
30505−2030−1	10−1
30505−2032−1	9−15
30505−2035−1	10−2
30505−2036−1	5−20
30505−2053−1	4−37 9−18
30505−2064−1	4−31
30505−5003−1	4−51
30505−5007−1	4−55
306−3489−03	36−2
307−1056	36−27
307−2575	36−11
307−2577	36−6
307−2648	36−9
308−0406	36−8
308−0841	36−13
3080−2240−00	18−19
31−343−1002	46−86 46−89 46−92 46−95 46−98 46−101
312 5A	26−3
313 1A	20−14
313001	54−35
313003	54−40
315−0655−02	36−10
3153407	2−299
3186FH154T040AP	54−36
320−1272−01	64−18 67−7 70−4
320−1512−10	36−26
320226	20−375 46−189
320473	37−11
320475	37−10
32163	31−4 32−4
32227	31−3 32−3
32239	31−16
32241	31−10 32−14
32242	31−12 32−15
323−1387	36−15

Section III. Numerical Index

PART NUMBER	FIGURE AND INDEX NO.
32936	31−13 32−16
32D901F450DF2B	13−39
33−053F00MXXRXX	25−19 43−14
3300−12	50−30
331C195H22	15−5 15−7
332−2884	36−7
333−0532−01	36−24
339222−2	24−16
339222−3	20−63
339226	8−36
34−046F01MXXRXX	25−9 43−9
3448−6964	47−4
346016	37−2
346060	37−3
34636−1102−101	20−332
34636−1104−101	4−20 5−33
34636−1106−101	26−13
34636−1111−101	8−21
34636−1112−101	4−25 5−36
34636−1113−101	8−24 9−10
34636−2026−2	8−3
34636−2055−1	27−32
34636−2086−101	4−7 9−8
34636−2087−101	4−34
34636−2104−1	9−3
34636−2109−101	4−33
34636−2109−102	4−33
34636−2112−1	10−9
34636−2117−1	4−32
34636−2118−101	4−36
34636−2118−102	4−39 8−29
34636−2118−103	4−40 8−30
34636−2119−101	4−35
34636−2139	7−3
34636−2143−2	7−5
34636−5008−1	4−4
34636−5008−2	4−4
34636−5015−1	7−6
34636−5016−1	27−1
34636−5019−1	4−48
34636−5020−1	4−49
347C095H01	13−121
35−583F00MXXRXX	49−7
35−702F00M02RXX	30−9
35−732F00MXXRXX	30−6 49−6
35−813F01MXXRXX	30−14 49−13
35−814F01MXXRXX	30−15 49−14
35−814F02MXXRXX	30−16 49−15
35−881F00MXXRXX	20−38 46−33
35−886F00MXXRXX	30−17 49−12
35−896F00MXXRXX	20−34 46−39
35−910F01MXXRXX	49−10
35−941F00M01RXX	30−3 49−3
35−955F01MXXRXX	30−13 49−11
35−AAMF00MXXRXX	30−2 49−2
35−ABIF07MXXRXX	30−4 49−4
35−ADLF00MXXRXX	30−18 49−16
350779−1	46−63
3540S−91−103	14−14
3540S−91−502	14−15
35561	31−11 32−13
36−011F00MXXRXX	20−33 43−16 46−37
36−022F01MXXRXX	20−41 46−41
36−038F00MXXRXX	21−4
36−038F01MXXRXX	20−42 46−42
36−038F03MXXRXX	21−3
36−049F00MXXRXX	20−39 46−34
3610NL04WB40−D00	47−8
3650	33−3 35−19 40−10 51−23
370−12	50−31
370−3159−01	65−2 66−3 69−2
370−3631−01	64−19 67−8 70−5
370−3693−01	65−4 66−4 69−4
370−3694−01	65−3 66−2 69−3
370−4348−01	65−4 66−4 69−4
37007	31−15 32−18
375−06026−00	46−67
377−0001−24	35−28
377−4−14	35−29
37TB10	14−41
37TB12	8−19 10−12
37TB16	5−24
37TB2F	20−338 46−21
37TB4	5−25 13−125
37TB6	5−25 5−26 13−123
37TB8	14−42
37TB8F	64−67
3800	10−29
38TB16F	27−34
38TB5B	13−124
38TB6F	27−35
39−2GY	33−32 35−20 40−2 51−26
3903264	36−20

Section III. Numerical Index

PART NUMBER	FIGURE AND INDEX NO.
390AS001NF2806H6	3−48 3−96
3920047−01	50−11
3920055−01	50−29
39575	17−79
39985	32−19
39TB12F	20−62 20−335
39TB4	15−40
39TB5F	23−8
39TB8F	17−74 20−54
3D55606G01	15−25
3D55673G01	13−74
3D55707G01	16−16
3D55729G01	16−10
3D55730G01	16−4
3D55738H01	13−148
3D55747G01	16−3
3D55852G01	16−1
3D55853G01	16−2
3D59369G01	13−82
3D59371G01	13−30
3D59372G01	13−18
3D59476G01	15−1
3D59511G01	13−45
3D59736H01	13−61
3D59743G01	13−59
3D59767G01	13−62
3D60349G01	16−14
3D60821G01	13−131
3JR69	51−61
3M−1	17−21
3M−2	17−21
3M−3	17−21
3P85	54−37
3VX257	13−65
3VX265	13−65
40076	51−24
40327	2−7 2−8 32−
40328	32−8
40372	46−13 64−46
40373	46−12 64−48 64−49
40505−1001−101	3−15 4−
40505−1001−102	3−15 4−
40505−1201−101	4−15 9−
40505−1202−101	4−14 5−
40505−1210−101	9−4 10−
40505−1212−101	4−42
40505−1213−101	4−42
40505−1301−102	26−5
40505−1302−102	26−4
40505−2001−1	9−5
40505−2002−101	9−2
40505−2005−101	5−21
40505−2006−1	10−38
40505−2008−101	4−41
40505−2008−102	4−41
40505−2010−1	10−33
40505−2012−1	9−7
40505−2018−2	4−58
40505−2026−1	10−30
40505−2027−101	9−9
40505−2051−101	10−13
40505−5001−1	4−48
40505−5002−1	4−49
40505−5004−1	4−49
40505−5005−1	4−48
40505−5006−1	4−54
40505−8023	3−2
408−2200	35−27
416−0796	36−19
41C2081	13−10
4230	13−121
42332−4	20−327 20−331
42701	67−9
42702	46−13
42703	46−12 64−47 64−50
428056	20−180 20−183 20−186 20−189 20−314 20−321 46−141 46−144 46−147 46−150
43−456A	3−79 33−50 67−12
43−616	3−79 33−50 67−12
430800(MODIFIED)	13−11
431P104X92	27−4
435−16840	19−7
435−16841	19−4
435241	3−14
44−02633	46−51 64−70
446−L−SLH−TC−P	51−21
44636−1007−101	4−42
44636−1116−102	26−14
44636−1303−101	27−2
44636−2138−1	4−30
44636−2153−1	8−20
44636−2199−101	11−
44636−5006−1	4−3
44636−5010−1	4−5
44636−5014−1	4−2
44636−5021−1	4−51
45−700−P10−DD−15AMP	48−10
4600−02	20−69
4610−01	20−69
466B−1	3−9 3−10 18−8
4693DX	45−8
4700−51	17−78
4738−6−8B	15−5 15−7
47712	46−120
4778−1.0	17−21

Section III. Numerical Index

PART NUMBER	FIGURE AND INDEX NO.
4778−2.0	17−21
4778−3.0	17−21
4779−10	18−9
47K1	45−9
49−515	33−35
4C038	40−7
4C365	40−3
4G2190	8−11 10−14
4G2473	5−3 8−14 10−4
4K638C	51−63
4L121−3500/T15000−NP/N	2−18
4MP−12698K	58−1
4MP−13104K	59−3
4T−6	18−4
5−069N674−70	5−32 8−39 10−22
5−32	53−1 56−10 61−4
5−554739−2	2−201 20−299
50−672−6701−89	18−19
5000301	11−5
502	35−22
50505−1103−101	5−36 5−40
507−3918−1471−600	13−51
508673−04	48−26
508677−03	48−27
50CA3.6−1395	2−24 2−50
50L−2	2−23 2−49
51−16−709−24	13−25
510291−02	50−37
510291−03	50−38
511516−01	48−20
511517−01	48−21
511518−01	48−22
511533−05	48−13
511557−01	48−16
511558−01	48−35
511560−02	48−28
512015−04	48−17
5121	13−182
512184−04	48−2
512376−01	48−18
512377−01	48−24
512378−01	48−23
512384−07	46−18 48−
512390−01	48−1
512426−03	48−7
512446−02	48−25
51257	38−1
512601−01	48−29
512602−01	48−30
512899−02	48−3
513227−03	50−12
513227−04	50−19
513227−05	50−25
513421−01	50−13
513433−01	50−14
513433−02	50−20
513503−02	50−16 50−22
513593−01	48−5
513608−01	48−4
513610−01	50−43
513616−01	48−8
513618−01	48−34
513686−01 REV B8	48−6
513702−01	48−31
513703−01	48−38
513754−01	49−8
513836−01	48−32
513837−01	48−33
513989−01	48−19
514210−01	48−14
514276−01	48−9
514504−01	50−26
514515−01	50−27
51T−1372	17−76
5201G1	13−78
530151−8	22−7
53N100TB0A158	54−26
545−0202−007	51−4
54636−1001−101	3−15 4−
54636−1003−102	20−4 27−
54636−1114−101	5−39
54636−1115−101	8−18
54636−1117−102	27−16
54636−1201−101	4−15 8−
54636−1202−101	4−14 5−
54636−1204−101	5−1 6− 8−1
54636−1204−102	5−1 6− 10−18
54636−1211−102	5−2 7− 8−13 10−35
54636−2001−101	8−40
54636−2007−101	5−21
54636−2025−1	8−41
54636−5005−1	4−1
54636−8005	3−2
54B6750H11	15−12
54B6831H02	15−31
551199	20−21 64−4
55224−284	12−6
5542754	54−27
55729−06	46−175 46−176 46−179 46−180
55822AV	15−10
56000301000B	13−85
56000701000B	13−84
56001101000B	13−86
56001301000B	13−90
5601	51−42
57−10500−14	45−65
572−4851−01−05−16	13−115 13−120
574R718H44	13−112

Section III. Numerical Index

PART NUMBER	FIGURE AND INDEX NO.
579R752H01	13−25
580R016H02	13−106
580R509H03	15−29
580R509H78	15−37
582R209H23	13−38 16−24
582R908H01	14−46
58741	46−9
588R721H04	13−65
59−SCD−B78558	38−2
59−SCD−B78559	38−7
590R531H04	16−19
598−0004322	20−29 45−5 50−4
598−0012175	20−29 45−5 50−4
5D	20−382 68−2
5W975	51−2
5X827	36−29
5X840	33−29
5X847A	35−4
5X853	33−30
6.6URD30TTF0200	57−4 57−9 57−14
60−02075	17−72 20−18 46−19 64−2 64−64
60−674−1010−89	18−9
60−70213	13−149
60−70219	13−150
600A−16	26−8
600J	26−9
600RJ20	5−27
600RJ3	26−10
600RJ5	26−11
601−215	33−49
601RJ−3	27−33
603026	64−58
603027	64−59
604B018H01	13−79
604JJ−6	13−126
60WA−B09	33−4
612J408G01	13−44 16−
62−40−351−3	53−4
62−42−351−3	56−12 61−5
63569	35−14
64276(MODIFIED)	13−11
645A680H01	13−78
645A690H03	13−56
645A702H03	16−17
645A718H01	14−10
645A718H02	14−9
645A748H04	13−84
645A748H06	13−85
645A748H08	13−86
645A748H10	13−90
645A780H14	13−77
645A780H15	13−4
645A780H16	13−71
645A780H17	13−72
645A786H01	15−15
645A794A02	13−25
645A799H01	15−2
645A820H01	15−20
645A821H01	14−43
645A823H02	14−15
645A823H03	14−14
645A825H04	13−76
645A836H24	13−20
645A836H25	13−131
645A856H05	13−113
645A856H06	13−117
645A859H01	13−57
645A870H03	13−142
645A870H04	13−143
645A914H02	13−16
646A034H01	15−17
646A048H01	13−68
646A049H01	15−34
646A059H03	13−47
646A059H04	13−48
646A061H02	13−146
646A061H03	13−147
646A062H01	15−16
65−39−600−000	42−31 44−33
650−0073−001	46−4
65057−007	20−119 46−117
66−033F03MXXRXX	21−6 21−7
66−172F02MXXRXX	21−1
668	51−24
6783	10−37 11−3
68175−1011	45−21 45−25 45−29 45−33 45−37 45−41 45−81 45−83 45−85 45−87 45−89 45−91 45−93 45−95 45−97 46−85 46−88 46−91 46−94 46−97 46−100
6910079−01	48−36
6BT5.9	36−18
6EQ1	20−73
6K167	51−63
7−003−0126	33−17
7−010−0308	33−2
7−010−0363	33−18
7−010−0371	33−21
7−010−0434	33−10
7−010−0435	33−8
7−010−0448	33−22
7−010−0449	33−24
7−010−0450	33−19
7−015−0179	33−23
7−32−20−NON	58−4 59−7

Section III. Numerical Index

PART NUMBER	FIGURE AND INDEX NO.
700−1−24	35−26
7000301225	17−24
70020	3−84 39−24
700300	18−21 19−17
7004−016	33−6
705−174−5	39−6
705−240	39−9
706J221G01	13−23
706J225G01	13−22
706J233G01	13−24
706J716G01	13−21
7120−2X, A74−1	1−25
7172737−01	28−8
7172741−02	29−7
7172745−01	29−1
7172749−02	29−3
7172753−01	29−5
7172757−02	29−2
7172761−00	29−6
7172761−01	29−6
7172765−02	29−4
7172765−03	29−4
7172770−02	20−8 29−
7172770−03	20−8 29−
7172777−01	29−8
7172777−02	29−8
7180730−00	20−122
7180730−01	20−124
7180730−03	20−126
7180732−00	20−301
7180750−00	28−6
72233	35−13 35−15
72317−01	35−18
72346−01	35−16
7257275−01	28−9
7257279−00	28−10
7257283−00	28−11
7257315−00	28−7
727361	41−3
72X4	11−15
7328334−03	28−1
7328340−01	28−3
7329942−00	28−4
7329946−01	28−5
733−PF−U−8/4150 (14 TO 140F)	33−12
733−PF−U−8/4150 (32 TO 122F)	33−11
7339347−00	28−12
7339350−04	20−7 28−
7339439−01	28−2
7362721−00	20−50
74−0495−01	64−40 64−124
743−PF−4150 (−58 TO 120F)	33−1
745530−3	47−5
745777−3	13−76
747303−3	20−368 46−70
747306−3	20−367 46−69
7480A01G01	15−36
753−PB/XO (32 TO 122)	35−9
753−PB/XO (32 to 122)	33−16
769−9654	20−392 68−8
77109	35−15
779−6	3−12
78652X	12−3
7921104−00	22−2
7921289−00	20−52
7C527	35−35 51−62
7PA25	58−5 59−8
8−1544−RM−1	20−79
80137	51−51
80138	51−51
801550−DR	51−46
80400	64−42
80405	46−11 64−45
80406	46−10 64−44
80416/21201	46−9
80ROZJ81	37−26
819−B1800W	14−46
81F1312	33−35
824−1	39−10
825−1	39−11
831−3816	39−3
831005−025	41−1
841−17−DCFR−A37P	20−105 20−108 20−130
841−17−DCFR−A37S	20−111 20−114
8472B(OPTION 003)	2−26 2−52
850−38−NS	39−3
8503812FP−3	17−20
85062−01	3−37 3−61 20−245
85062−04	1−43 1−60
851500	13−91
851600	13−93
851700	13−96
8531−1	1−6 39−
8531−2	39−1
8531−4	39−21
8552−24	39−1
8552−74	39−7
8552−74−1	39−8
8603100−00	48−37
8FTX−B	15−3
9−2000−001−1	64−37
90−850−202	2−208
90−854−201	19−38
90−854−202	19−39
90−854−203	19−40
90−854−204	19−41
90−854−205	19−42
90−854−206	19−43
90−854−207	17−38

Section III. Numerical Index

PART NUMBER	FIGURE AND INDEX NO.
90−854−208	19−44
90−855−201	18−70
90−855−202	18−71
90−855−203	19−20
90−855−204	19−21
90−855−205	19−22
90−855−206	19−23
90−855−207	19−24
90−855−208	19−25
90−855−209	17−35
90−855−210	19−26
90−855−211	19−27
90−855−212	18−72
90−855−213	19−28
90−855−214	19−29
90−855−215	19−30
90−855−216	19−31
90−855−217	19−32
90−855−218	19−33
90−855−219	19−34
90−855−220	19−35
90−855−222	19−36
90−856−201	17−29
90−856−202	17−30
90−857−201	18−24
90−857−202	18−25
90−857−203	17−34
90−857−204	17−36
90−857−205	17−37
90−862−201	17−44
90−863−201	19−37
90−863−202	17−41
90−864−201	17−39
90−864−202	17−40
90−864−203	17−42
90−864−204	17−43
90−864−205	17−45
90−867−201	17−31
90−867−202	17−32
90−868−201	2−181
90−868−202	2−183
90−868−203	2−182
90−894−201	17−28
90−894−202	17−27
90−894−203	3−71
90−895−201	17−33
9007C54ED	38−13
9007C62ED	38−13
901−307−10F	2−111
901−307−11F	2−156 34−44
901−307−14F	2−137
901−307−18F	1−39
901−307−22F	1−44 1−62 2−140 2−223
901−307−31F	20−418
901−307−33F	2−141 2−224
901−307−39F	2−114
9029430−202	64−8 64−16 64−23 64−27
9060006−01	50−45
9060049−01	48−15
9060053−01	50−17 50−23 50−28
9060054−01	50−18 50−24
9060077−01	50−15 50−21
906406	35−23
90D1680−9	13−99
91251A552	4−52
92−390F01MXXRXX	20−30 25−
92−390F02MXXRXX	43− 46−29
92−616F00MXXRXX	30−
92−616F0XMXXRXX	20−35
92−617F00MXXRXX	46−28
92−617FXXMXXRXX	49−
92−631F00MXXRXX	46−28
921122	17−19
925486−1	22−5
93−527F00MXXRXX	25−8 43−8
93−549F00MXXRXX	20−36 46−31
93−626F00MXXRXX	20−31 43−15 46−35
93−AAWF00MXXRXX	20−25
93−AAYF00MXXRXX	20−65 21− 46−38
93−ABJF00M00RXX	21−1
93−ABMF00MXXRXX	21−7
93−ABRF00M00R04	21−5
93−ABSF00MXXRXX	30−1 49−1
93−ACUF00M00R03	64−31
93−ADLF00MXXRXX	25−5 43−4
93K7AB15D−STK−626−RH	2−12 33−57
95−579F00MXXRXX	20−32 43−17 46−36 46−56 46−60
95−580F00MXXRXX	25−14
95−628F02MXXRXX	20−372 46−72
95−636F00MXXRXX	20−366 46−68
95−791F00MXXRXX	20−380 46−57
95−795F00MXXRXX	20−371
95K7E15CS3626	51−43
96−162F01M00R13	30−5 49−5
96−162F01M01R06	30−5 49−5
96−217F00MXXRXX	30−12
96−275F00MXXRXX	30−7
96−617FXXMXXRXX	46−30
96878	42−27 44−29
96881	42−26 44−28
96882	42−7 42−15 44−7 44−15

Section III. Numerical Index

PART NUMBER	FIGURE AND INDEX NO.
97−249F00MXXRXX	43−6
97018	42−3 42−11 44−3 44−11
97246−M2	42−22 42−25 44−24 44−27
97252	42−23 44−25
97256	42−4 42−12 44−4 44−12
97260	42−16 44−16
97274−M2	42−8 44−8
97529−M2	42−24 44−26
97530−M2	42−2 42−10 44−2 44−10
980−01032−06	21−1
98804A029	11−17
9995252−2	11−7
9L15ECC001	59−5
9T51B0028G03	3−88
A−12N126	33−28
A−16N12B	3−85
A−16N16ALP	51−25
A−257099	37−31
A−276950	37−24
A−276963	37−35
A−294228	37−16
A−320491	37−17
A−6N64	40−6
A−A−59125/4	24−21
A1006−1032	13−20
A1006−1420	13−131
A16N16A	33−33
A19ABC−24C	51−6
A21UJC1A9P−C256CP	65−1 69−1
A22UKC1A9P−C256CP	66−1
A28F5602	59−4
A30057	8−5
A30868	5−11 8−6
A49899	5−10 8−5
A532−06	3−43 3−50 3−65 5−16 5−18 5−45 5−46 6−4 10−10 10−27 27−25
A555S	11−4
A60X70−4TI	55−2
A617CS	18−4
A619CS	17−21
A620CS	17−21
A621CS	17−21
A73803	5−13 8−8
A73805	5−14 8−9
A77151	5−12 8−7
A8708	8−33
AA−8134	27−31
AD−091A	46−27
AE75−30−11−81EX	54−10
AJT80	54−3
AMC 1026	3−11
AMC0851	4−45
AMC1164	4−45 4−46
AML21EBA2AC	60−6
AML51−F20R	60−7
AMP0006D33SA	54−36
AN3C5	15−17
AN4C7	13−130
AN960C10	14−1
AN960C10L	13−20
AN960C4	13−141
AN960C416	5−2 13−2 13−5 13−6 13−7 13−62 13−70 13−130 13−131 13−144 15−8 16−11
AN960C416L	2−14 2−15 2−17 2−19 2−20 2−21 2−27 2−30 2−31 2−32 2−33 2−34 2−35 2−37 2−38 2−39 2−40 2−41 2−42 2−43 2−44 2−45 2−46 2−47 2−53 2−55 2−56 2−57 2−58 2−59 2−60
AN960C516	4−34 4−35 15−36
AP−425−244	57−2 57−7 57−12
AP370−134	58−3
AR4390	2−24 2−50
AR48675	37−45
AR50041	37−55
AR97717	37−60
AS1035−002	3−77
AS1037−001	3−73
AS1037−005	3−74
AS1040−002	3−76

Section III. Numerical Index

PART NUMBER	FIGURE AND INDEX NO.
ASG6X6X4	3−80
ASN−6	31−14 32−17
ATM 1	54−15
ATQ1−1/2	56−5
ATQ10	56−6
AVP24ACA05 CD−1000	51−48 51−50
AVP36ACA05 CD−1000	51−49
B−292357	37−81
B−292902	37−32
B−294548	37−3
B−78556	38−14
B100−S0B	3−90
B10683−508	12−7
B1264	1−78
B1270E	1−21
B1302A	1−23
B1303E	1−24
B1529−11−A	39−14
B1529−11−B1	39−15
B1529−11−B2	39−16
B1529−12−AZ	39−19
B1529−13−B1X	39−17
B1529−13−B2X	39−18
B1821BH050C350N	5−7
B1867EC040130	26−3
B3−K21	15−12
B434	8−31
B537	1−77
B537A	1−22 34−4 34−31
B575	40−11
B705−219	39−3 39−22
BC−3	19−101
BD6	51−7
BK650M	41−5
BPB−4−51.05	19−9
BPB−4−64.05	19−8
BPP−4−57	19−1
BR2325	30−11
BRA009	52−12
BRKT1U	64−13
BTC−504	30−10
BTU−10−2083TK−1AS−1	3−70
BW050J141110001	51−56
BWP5PJ141110001	61−
C−1939	20−52
C−230−S−118	26−6 27−15
C−255670	37−37
C−294301	37−6
C−300S−10	17−22 20−81
C−300S−20	17−23 20−82
C−836−06	27−30
C16−03472	38−14
C17203D15	13−151
C17203D27	13−152
C2263−20−1	4−11
C2263−20−2	4−12
C284BL1	13−2
C3239X8X8	11−11
C3269X8X8	11−9
C3409X2	11−6
C3409X8	11−10
C88000203	20−157 20−178 20−220 20−223 20−227 20−232 20−264 20−269 20−280 20−283 20−287 20−292 20−296 46−105 46−156 46−161 46−169 46−173 50−42
C88000206	1−39 20−407 20−414 45−71 46−123 46−183
C88000207	2−96 2−150 2−193 2−198 2−250 2−254 2−258 2−262 2−266 20−164 20−168 20−205 20−209 20−216 20−228 20−233 20−237 20−244 20−255 20−259 20−273 20−277 34−61 46−154
C88000208	1−44 1−61 2−162 2−167 20−411 46−119
C88000218	20−217 34−48 34−52 46−110 46−136 46−159
C8800027	20−172
C88104040	46−111 46−115
C88124040	46−106 46−138 46−174
C88134040	20−415
C88144040	20−158 46−127
C88611000	20−210 20−238 20−243 20−250 20−254 20−260 20−265 20−270 20−276 20−288 20−293 20−300 34−21 46−165
C88611001	20−215

Section III. Numerical Index

PART NUMBER	FIGURE AND INDEX NO.
CA−2224−4	33−9 35−21 40−9
CAB−500RJ	64−41
CAT002	52−17
CBCC200605	68−7
CBK−22BMK11EX	54−29
CBK−2BMK−01EX	54−30
CBK−S2KS120EX	54−28
CC04133	20−390 68−6
CC6920−00−0280	64−7 64−15 64−22
CD36−20”X20”	35−33
CD36−36”x36”	35−31
CD36−42”X42”	35−36
CD40−22”X22”	33−47
CD631615	58−2 59−6
CDB−38−70003	36−28 37−7
CG1−12	7−4
CGS−50−3	20−346
CGS154TO35W5L3PH	54−1
CGS442T300X5L3PH	55−1
CH12BB	35−3 40−1
CH22	14−4
CKB−38−37060	37−8
CL−3−BLP−T−1.0	10−25
CL−F13	18−1
CL−F14	18−10
CM300HA−24H	57−5 57−10 57−15
CM6−1314.096S	7−1
COHP−150	2−295 46−191
CON017	52−6
CPS II 120	33−37 33−41 33−44
CPS II 120W	33−36 33−40 33−43
CPS120W	33−36 33−40 33−43
CT02154	20−419
CTO1949−2JR	2−102 2−220
CTO1965−2JL	2−88 2−101 2−106 2−118 2−121 2−125 2−129 2−132
CTO2158−2JL	2−133
CTO2159−2JG	2−115
CUBE−300−7	38−5
CWH2202	51−27
CWH3504	51−28
D−1172	2−11 33−
D−1296	2−11 33−
D−1388−1	35−
D−1388−3	35−
D−1388−X	1−3
D−1389−1	34−2 40−
D−1437	2−11 33−
D−1719	1−3 35−
D−1974	2−11 33−
D−2241	2−11 33−
D−294303	37−5
D−3877	1−4 51−
D−4065	1−4 51−
D−4154	1−4 51−
D−4625	1−4 51−
D−5606	1−4 51−
D−5659	1−4 51−
D−5660	1−4 51−
D−5748	1−4 51−
D−5749	1−4 51−
D−5750	1−4 51−
D−5751	1−4 51−
D−5938	1−4 51−
D−80525B	38−1
D2263−23	4−10
D324N	35−6 51−29
D350492	43−6
D350493	43−6
D355ES	18−6
D38999/26WA35PN	2−154 34−16 34−54
D38999/26WC35PN	34−9 34−12 34−43 34−47 34−51
D38999/26WD5SN	34−6
D70336/1−20	26−3
D70342/2−053	26−3
DA−B48	18−12
DAMM15SF179	24−10

Section III. Numerical Index

PART NUMBER	FIGURE AND INDEX NO.
DAU−15PF0	2−192 2−248 2−253 2−257 2−261 2−265 19−47 20−163 20−167 20−171 20−204 20−208 20−214 20−235 20−240 20−242 20−248 20−252 20−258 20−272 20−275 34−46 34−50 34−60 45−100 46−164
DAU−15S	5−43
DAU−15SF0	2−94 2−148 2−197 20−135 20−162 20−170 20−174 20−203 20−207 20−212 20−226 20−231 20−236 20−249 20−253 20−257 20−262 20−267 20−285 20−290 20−298 34−19 45−43 45−48 45−99 46−153
DAU−25SF0	19−91
DAU−SF0	20−166
DBMM25SF179	24−4 24−9
DBMM5W5S	27−20
DBU−25PF0	19−53 20−136 20−155 20−160 20−175 20−177 20−219 20−222 20−225 20−230 20−263 20−268 20−279 20−282 20−286 20−291 20−295 23−10 45−53 45−60 45−76 46−103 46−155 46−160 46−167 46−171 50−40
DBU−25SF0	19−51 45−44 45−49 46−104 46−137 46−168 46−172
DC 600A	25−2 43−2
DCM−6000−200/30/45/CL	27−1
DCMM37PF179	24−8
DCMM37SF179	24−5 24−6
DCU−37PF0	20−405 45−70 45−74 46−76 46−122 46−182
DCU−37SF0	20−406 46−77
DDMM50SF179	24−6 24−7 24−9
DDU−50PF0	20−156
DDU−50PF0	46−80 46−83 46−118 46−126
DDU−50SF0	2−159 2−165 20−410 45−64 45−67
DEU−9PF0	18−52 20−213 20−409 45−59 45−62 46−108 46−135 46−158
DEU−9SF0	18−53 19−84 46−109 46−113
DH0625	20−22
DIS001	51−9
DO50399101	19−2
DT 920	50−9
DT−130	50−8
DT−94B	50−9
DT4213−ST	50−7
DU−3	40−8
E−15−DTL−10−2C−O−DX	16−15
E−294491	37−23
E060E	33−31
E2263−00−1	4−9
E263−0601−5	54−13
E3−41−15	4−59
E79−30A	50−45
ECW−4A	33−5
EH145C−Y11	54−6
EH145C2P−Y	54−8
EHB125NS	33−55 51−70
EHB14015	33−56
EHB14020	51−71
EIFM−5	33−5
EPS 20	54−25 57−3 57−8 57−13
EVNBMCX	20−390 68−6
F−1544−200B−11	20−77
F02A250V5A	13−52
F02B125V6¼A	17−8

Section III. Numerical Index

PART NUMBER	FIGURE AND INDEX NO.
F02B250V1A	17−4 17−10
F02B250V3A	17−6 17−12 20−16
F03A125V20A	13−98 13−132
F03A250V10A	13−92
F03A250V3A	13−101
F03A250V5A	13−135
F03A250V8A	13−95 13−134
F03B125V12A	13−133
F03B125V5A	13−97
F03B250V2A	13−94 13−100
F2100−100−1110	64−35
F8T5−CW	13−154
FA4116	19−1
FA4117	19−9
FA4118	19−8
FA60−2015	64−62
FA60−2016	46−22
FA60−2051	2−14
FA60−2052	2−16 2−17
FA60−2053	2−17
FA60−2055	2−15
FB1622−14	6−5
FF5052	36−23
FH43	3−91
FHL17G1	13−54 13−136
FLN−R100	51−32 51−36
FLNR200ID	51−30 51−34
FNQ1−1/2	56−5
FNQ10	56−6
FRN−R−40	3−83 35−15
FRN−R−60	35−14
FS−1280	36−22
FV5310MG03	47−2
G−292806	37−79
G103−1	15−16
G5N02N11072.0	3−71
G5R01N11011.5	17−27
G5R11N11005.5/180 DEG	17−28
G5R11N62074.0	17−33
GA−1587L	13−10
GBA−18	4−13
GBA−20	4−13
GF5252IA	51−19
GH3−Z130−1	13−47
GH3−Z130−2	13−48
GJ−ME721B−M	64−52
GPNS−12	38−4
GS3TO15R0F150	55−5
H323N	51−31 51−35
H324N	51−33
HANDSET	42−9 44−9
HC664J1C12	51−5
HDRA 5110/06412	19−11
HDRA 5810/06411	19−5
HDRA 6410/06413	19−10
HDSB−1	51−47
HEA023	52−11
HKP	54−41 54−43
HLMP−3300	25−19 43−14
HM−4119	50−12
HM−4119−D−DA	45−10
HM−4319	50−19
HM−4520	50−25
HP11636A	3−13
HPF−EE	20−44 46−44
HRCW−31JT3	24−16
HRCW−41JT3	20−63
HRFB−605JT3	24−18
HTA400S/SP2/CE	54−2
IC456−C	46−6
IC456A	64−54
ICL51A20LM	19−11
ICL58A20LO	19−5
ICL58J28HN	19−14
ICL64A18LN	19−10
IF−1800−400−3−N	42−29 42−30 44−31 44−32
IF/51022	19−3
IF/52043	18−17
IL35 18X48	51−64
IL35 20X20	51−66
ISOTEL4	20−388 67−11 68−1 70−6
IW−8	13−153
JANTX1N1190	15−27
JANTX1N5552	27−6
JANTX1N5603	16−5
JANTX1N649−1	20−59 24−3
JANTXM19500/51902	23−1
JN422	3−82
JX−44	13−106
K−AB−T1	20−67
K−AB−T1−PS1	20−68
KD1−5	20−42 46−42
KDM001−15CA2JG	2−111
KDM001−15CA4JF	2−156 34−44
KDM001−25CA2JF	2−137
KDM001−37CA2JG	2−114
KDM001−37CA2JK	1−39
KDM001−50CA1JR	20−418
KDM001−50CA2JR	1−44 1−62 2−140 2−223
KDM001−50CA5J	2−141 2−224
KEY−C/104ENH	20−383 68−5
KLKD 1	54−15
KLKD 10	54−14
L−5782−20	13−8
L3510	38−6

Section III. Numerical Index

PART NUMBER	FIGURE AND INDEX NO.
L44R	2−226 2−228 3−18 3−21 3−24 3−27
L45N	34−34
L45R	1−46 1−48 1−50 1−52 1−64 1−66 2−171 2−173 2−175 2−178 2−179 34−33
L45W	2−176 2−180
L4NM	2−185 2−187 2−189 3−19 3−25 3−28
L4PNR	3−22
LB240A120ESRIF	51−20
LC−022C−10SS	13−112
LCB5−8−19	59−2
LF−3349	36−20
LFOM2840	60−4
LH90/1	13−53
LID006	52−14
LIN001	52−5
LM 510	43−7
LM64P83L	60−3
LPJ−80SP	54−3
LRA−15	42−18 44−18
LRS−53−24	42−19 42−20 44−19 44−20
LRS−55−28−2602	20−11 64−65
LRS−55−28−43720	20−11 64−65
LRS−58−5−43720	20−5
LT1504−C6−6	6−2
LV242999−62T10	3−72
LZS−50−1	26−3
M−109	8−35 10−17
M−301−9−LJ	16−20
M−301−9−LO	16−21
M−823NS	15−20
M1095−2	27−14
M12883/41−06	13−141
M12883/41−06S	24−17
M12883/41−07	13−140
M12883/41−07S	14−8
M15733/61−0013	13−75
M15733/74−0059	13−73
M1930	4−66 4−68
M1931	20−381
M1932	20−381
M22885/10−75	14−24
M22885/10−78	14−25
M22885/11−01	14−18
M22885/12−02	14−26
M22885/12−03	14−27
M22885/12−04	14−28
M22885/12−05	14−29
M24211/2−005	2−72 13−3
M24215/9−001	13−181
M24236/25−HHJBA	15−33
M24308/2−1	3−33 3−55 5−44 18−45 18−56 18−62 18−65 18−68 19−60 19−63 19−66 19−69 19−72 19−75 19−78 19−81 19−88 19−95
M24308/2−14	2−86 2−99
M24308/2−2	2−153 3−32 3−54 18−40 18−59 20−98 20−153 45−46 45−51
M24308/2−2F	27−22
M24308/2−3	2−135 19−56 20−141 27−21 45−17 45−46 45−51
M24308/2−356	14−45
M24308/2−4	1−36 2−87 2−104 2−113 2−124 2−128 2−131 20−150
M24308/2−5	1−41 1−58 2−100 2−139 2−222 20−198 45−64
M24308/25−9	10−7 23−11
M24308/26−1	10−7 22−8 47−6
M24308/26−1F	13−26
M24308/26−2	22−10 24−10
M24308/4−1	18−41 18−44 19−59
M24308/4−2	2−109 18−49 34−42 34−53 45−16
M24308/4−3	2−136 19−57 20−97 20−133 20−152

Section III. Numerical Index

PART NUMBER	FIGURE AND INDEX NO.
M24308/4−4	1−37 1−55 2−105 2−117 2−120 2−123 2−127 20−95 20−100 20−102
M24308/4−5	2−219 20−146 20−148 20−199 20−201
M3786/36−0901	14−20
M39003/01−8232	5−23 10−11
M39012/16−0013	2−210 2−212
M39012/16−0015	45−19 45−23 45−27 45−31 45−35 45−39 45−87 45−89 45−91
M39012/16−0017	2−207
M39012/19−0015	20−144
M39012/55−3129	2−209
M39015/1−007YP	23−4
M39016/53−026M	24−15
M39016/6−141M	24−11 24−13
M39016/6−147M	20−60
M39018/03−1298M	27−5
M39029/64−369	2−195 2−255 2−259 2−263 2−267 19−48 19−54 20−246 50−41
M39030/3−10N	19−19
M39030/3−11N	18−5
M3933/10−2	2−22 2−48
M55339/02−30001	18−20
M55339/04−00030	4−24
M55339/05−00057	4−64 4−65
M55339/17−00001	2−25 2−51
M55339/17−00274	45−12
M55339/28−30001	13−1
M55339/29−30001	18−18
M55629/1−094	13−49
M6106/51−002	2−300
M6363/8−6AS15	14−5
M6855/4−11H089	31−17 32−20
M7793/10−001	14−13
M7793/3−001	23−3
M83248/1−473	15−41
M83503/7−09	20−104 20−107 20−110 20−129
M83503/7−10	20−113 20−116 20−118 20−121 20−123 20−125 20−127
M83536/11−007L	13−138 14−6
M83536/9−024M	13−139 24−12 24−14
M83731/9−311	23−5
M85049/10−116W	3−49
M85049/39−9A	2−155
M85049/48−2−1	3−38 3−62
M85049/48−2−2	3−36 3−60
M85049/48−2−3	23−14
M85049/50−5	1−42 1−59
M85049/52−1−14W	2−110
M85049/52−1−18W	2−204
M85049/52−1−28W	1−29 1−38 1−56 3−35 3−59 20−55
M85049/52−1−36W	1−34
M8805/90−002	15−30
M8805/96−009	23−6
M8805/99−025	14−19
MA−418−0−0−2	33−48 35−32 35−34 35−37
MA−418−0−0−3	33−48 35−32 35−34 35−37 51−65 51−67
MA−90031	42−17 44−17
MA−94146	42−1 44−1
MA8H132−S006	2−33 2−58
MBE−1022	18−11
MBM10312C12100	56−
MBM10312C121000	51−58
MDA 2½A	26−3
MDA15	20−6 20−12 64−66
MDA8	17−2
MDC1078S−6	3−12
MDL−2/10	54−38
MDXT−3	15−17
ME101C	46−7
ME210	20−391 50−3 68−7
ME721B−M	44−21
MF−RDA−AA	34−24
MF−RJ11−12−4	46−16 64−61
MF−RJ11−16−2	46−17
MF−RPG−AA	34−29
MGB	2−296
MIC−A18S	19−3
MICROFLECT	1−5 38−
MODEL 80DGDA	36−25
MODEL WB	51−8 52−
MOT004	52−9
MOU−MS/ERGO−PS2	20−389 68−4
MPS800	64−51

Section III. Numerical Index

PART NUMBER	FIGURE AND INDEX NO.
MS15003−1	11−8
MS15395−810	4−60
	4−61
MS15795−802	13−56
	13−181
MS15795−803	2−301
	18−3
	18−6
	18−11
	18−13
	19−5
	19−10
	19−11
	19−12
	19−14
	20−58
	23−3
	64−71
MS15795−804	13−113
	13−118
	13−129
	14−9
	14−10
	14−11
	14−12
	15−26
	15−28
MS15795−805	2−24
	2−50
	4−43
	4−44
	17−18
	18−16
	18−17
	19−3
	20−10
	20−17
	20−61
	20−337
	20−338
	46−20
	46−21
	46−27
	46−35
MS15795−806	13−47
	14−2
	15−25
	16−4
	16−12
	16−16
	16−21
	16−25
	16−26
	26−7
	64−4
MS15795−807	2−16
	5−1
	6−2
	8−1
	18−2
	18−7
	18−15
	19−2
	19−4
	19−7
	19−13
	19−17
	20−6
	20−12
	20−52
	26−2
	27−7
	67−13
MS15795−808	4−66
	4−68
	9−6
	10−6
	10−16
	17−12
	17−13
	17−72
	17−74
	17−107
	17−108
	17−109
	17−111
	18−14
	19−1
	19−8
	19−9
	20−1
	20−2
	20−3
	20−4
	20−7
	20−8
	20−9
	20−14
	20−16
	20−21
	20−30
	20−31
	20−34
	20−35
	20−36
	20−40
	20−50
	20−57
	20−62
	20−65
	20−76
	20−80
	20−84
	20−335
	20−336
	20−381
	23−8
	27−1
	27−2
	27−9
	41−7
	41−8
	41−9
	41−10
	41−11
	41−12
	46−2
	46−8
	46−9
	46−14
	46−15
	46−17
	46−22
	46−24
	46−25
	46−30
	46−31
	46−35
	46−38
	46−39
	46−40

Section III. Numerical Index

PART NUMBER	FIGURE AND INDEX NO.
MS15795−808(cont.)	46−50
	46−53
	50−32
	50−35
	64−7
	64−9
	64−10
	64−13
	64−15
	64−17
	64−20
	64−22
	64−24
	64−28
	64−29
	64−31
	64−38
	64−39
	64−42
	64−51
	64−53
	64−55
	64−56
	64−57
	64−58
	64−59
	64−60
	64−61
	64−66
	64−68
	64−70
	67−3
	67−6
MS15795−809	14−13
MS15795−810	2−21
	2−29
	2−299
	3−7
	4−1
	4−2
	4−3
	4−4
	4−5
	4−48
	4−49
	8−13
	17−110
MS15795−812	4−6
	4−33
MS15795−814	1−76
	2−2
	3−1
	4−8
	7−3
	20−336
MS15795−820	1−6
	3−2
MS15795−826	8−12
	8−15
MS15795−841	13−73
	13−74
	13−78
	13−126
	14−3
	15−39
	15−40
	16−1
	16−2
	16−17
	16−19
MS15795−842	13−10
	13−45
	13−48
	13−50
	13−59
	13−92
	13−95
	13−98
	13−101
	15−17
	15−21
	16−7
	16−10
	16−15
MS16106−1	16−18
MS16228−4C	2−21
	2−29
	2−47
MS16555−47	10−23
MS16555−648	9−16
MS16555−650	10−24
MS16995−10	7−1
MS16995−25	6−2
MS16995−50	2−21
	2−29
	2−30
	2−32
	2−38
	2−39
	2−45
	2−47
	2−54
	2−60
	3−4
	3−5
	3−8
	3−14
	4−45
	4−48
	4−49
	4−51
	4−54
	4−55
MS16995−51	2−19
	2−20
	2−31
	2−33
	2−35
	2−36
	2−37
	2−38
	2−40
	2−41
	2−42
	2−43
	2−44
	2−46
	2−55
	2−56
	2−57
	2−58
	4−53
	5−2
	8−13
MS16995−52	2−27
	2−32
	2−34
	2−44
	2−53
	2−59
	4−1
	4−3
	4−4
	13−6
	13−7
MS16995−53	2−30
	2−41
	4−5
	4−48
	4−49
	4−50
MS16995−54	4−2
MS16995−63	4−33
MS16995−67	4−6
	4−34
MS16995−72	4−35
MS16995−79	4−36
MS16995−81	8−4
MS16995−82	4−9
MS16995−83	4−8
MS16996−24	13−2
	13−5
MS16996−25	13−5
MS16997−100	9−2
	9−3
MS16997−11	4−29
MS16997−145	10−2
MS16997−60	9−8

Section III. Numerical Index

PART NUMBER	FIGURE AND INDEX NO.
MS16997−61	2−21 2−47 10−1
MS16997−62	3−7 9−7 9−9 9−15
MS16997−81	9−2
MS16998−110	3−2
MS16998−113	3−2
MS16998−41	2−14 2−15 2−17
MS17143−13	17−57 17−61 17−67
MS17143−14	17−86 17−92 17−97 17−100
MS17143−15	17−56 17−60 17−66 17−94 17−98 17−101 20−194
MS17143−2	17−85 17−102
MS17143−4	2−143 2−145
MS17143−8	17−63
MS17143−9	17−55 17−59 17−65 17−71
MS17984C310	16−22
MS17986C438	6−1
MS18212−71	15−37
MS18235−3RT	13−51
MS20002−16	1−2
MS20002C16	1−2
MS20066−143	5−22 10−21 13−64
MS20066−145	5−22
MS20659−123	2−269 2−272 2−274 2−284
MS20659−124	2−270
MS21044−C06	3−1
MS21266−3N	27−13
MS21266−3T	17−73
MS21919WDG12	9−6 10−16
MS21919WDG15	10−6
MS24168A3	13−137
MS24308/4−4	20−413
MS24308/4−5	20−417
MS24523−22	23−7
MS24547−5	13−104
MS24658−22D	4−28 8−16
MS24677−19	5−1 8−1 10−18
MS24693−C25	16−18
MS24693−C296	15−8
MS24693−C47	16−17
MS24693−C97	13−62
MS25036−101	2−97 2−149 20−195 20−317 23−12 34−17 34−20
MS25036−102	3−43 3−50 3−65 5−16 5−18 5−45 5−46 6−4 10−10 10−27 27−25
MS25036−103	20−318 27−27
MS25036−106	2−214 5−47 17−82 17−89 20−181 20−184 20−187 20−190 20−325 23−16 27−24 46−142 46−145 46−148 46−151
MS25036−108	17−103 17−105 27−28
MS25036−112	2−79 2−92 17−70 17−95 17−106 27−26
MS25036−120	1−69 1−72 1−74 2−276 2−278 2−281 2−286 2−289 2−292
MS25036−122	1−70 1−73 1−75 2−279 2−282 2−287 2−290 2−293
MS25036−144	34−13
MS25036−145	34−10
MS25036−148	2−161 3−44 3−66 22−9 23−13
MS25036−149	1−30 2−194 2−205 23−18 27−29
MS25036−153	17−83 17−88 20−56 20−324 20−328 23−17

Section III. Numerical Index

PART NUMBER	FIGURE AND INDEX NO.
MS25036−154	2−215 27−23
MS25036−156	17−84 17−90 20−192 20−196 20−315
MS25036−157	2−75 2−78 2−82 2−91
MS25036−159	18−42 18−46 18−50 18−54 18−57 18−60 18−63 18−66 18−69 19−49 19−61 19−64 19−67 19−70 19−73 19−76 19−79 19−82 19−86 19−89 19−93 19−96
MS25089−2FR	13−103 14−21
MS27240−1	5−17 10−26
MS27240−3	5−15 6−3 8−17
MS27401−36M	20−71
MS27418−2C	20−61
MS27720−27−1E	14−22
MS28775−010	5−30
MS28775−163	5−29
MS28775−261	5−28 8−32 10−36
MS28778−12	5−4
MS28778−6	8−34
MS28778−8	5−4 5−31 8−38 10−5 10−15
MS3102R24−10P	27−17
MS3102R28−21P	8−22
MS3102R28−21SW	4−22 5−35
MS3106F22−22S	8−26 9−12
MS3106R28−21P	5−41
MS3106R32−8P	20−334
MS3106R32−8S	20−333
MS3116F14−15S	18−48 19−46
MS3116P8−33S	10−8
MS3214−4	13−113
MS33456W20−16S	8−25
MS3400D24−10P	17−69 20−303 20−307 20−309
MS3400D28−15P	3−58
MS3400D28−21P	3−34 3−57
MS3402D18−4P	20−330
MS3406D18−11S	45−56
MS3406D18−4S	2−203
MS3406D20−4S	20−138
MS3406D24−10S	2−74 2−77 2−81 2−90 20−306
MS3406D28−15P	20−132
MS3406D28−15S	1−54
MS3406D28−21PW	3−47 3−69 3−95 3−107
MS3406D28−21S	1−36
MS3406D28−21SW	3−31 3−53
MS3406D28−9P	1−27 20−53 20−86
MS3406D28−9S	1−28 20−87
MS3406D36−10P	1−32 20−91
MS3406D36−10S	1−33 20−92
MS3408D24−10S	2−84
MS3420−10A	3−51
MS3420−12A	3−41
MS3420−16A	3−42 3−52 3−64
MS3420−6A	3−39 3−63
MS3420−8A	3−40
MS3452W28−9P	8−27 9−13
MS3452W28−9S	20−51 27−18
MS3452W32−8P	27−19
MS3456W14S−5S	5−42
MS3456W20−16S	4−26 5−38 9−11
MS3456W22−22P	4−27 5−37
MS3456W28−21PW	4−21 5−34
MS3456W28−21SW	8−23
MS3476W14−12S	2−108 2−191 3−56
MS3476W14−18S	3−46 3−68 3−93 3−106
MS3476W14/10−116W	3−100 3−104
MS3478W14/14−18S	3−98 3−102
MS35275−220	13−113 13−117
MS35275−228	13−47
MS35275−229	13−49
MS35307−360	2−2 8−30
MS35307−460	7−3
MS35307−466S316	1−6
MS35307−539	8−15
MS35308−305	4−60 4−61
MS35308−306	17−110
MS35308−335	15−36
MS35308−366	3−1
MS35308−374	3−1
MS35333−79	5−19

Section III. Numerical Index

PART NUMBER	FIGURE AND INDEX NO.	PART NUMBER	FIGURE AND INDEX NO.	PART NUMBER	FIGURE AND INDEX NO.
MS35338−120	14−11	MS35338−136	2−24	MS35338−137	2−16
	14−12		2−50		4−58
			4−43		5−1
MS35338−134	13−56		4−44		6−2
	13−104		5−26		8−1
	13−181		8−19		13−73
MS35338−135	7−1		13−47		13−74
	13−113		13−49		14−3
	13−118		13−115		15−39
	13−129		13−120		15−40
	14−9		14−2		16−1
	14−10		14−41		16−2
	14−11		14−42		16−17
	14−12		15−25		16−19
	14−13		16−4		18−2
	15−26		16−12		18−7
	15−28		16−16		18−15
	18−3		16−21		19−2
	18−6		17−18		19−4
	18−11		18−13		19−7
	19−5		18−16		19−13
	19−10		18−17		19−17
	19−11		19−3		20−6
	19−12		20−10		20−12
	19−14		20−17		20−52
	20−58		20−61		26−2
	23−3		20−337		27−7
	64−71		20−338		67−13
			24−21		
			26−7		
			26−11		
			27−3		
			27−11		
			27−35		
			46−20		
			46−21		
			46−27		
			46−35		
			64−4		
			64−67		

Section III. Numerical Index

PART NUMBER	FIGURE AND INDEX NO.	PART NUMBER	FIGURE AND INDEX NO.	PART NUMBER	FIGURE AND INDEX NO.
MS35338−138	2−301	MS35338−138(cont.)	41−12	MS35338−139	2−14
	4−66		46−2		2−15
	4−68		46−8		2−17
	9−6		46−9		2−19
	10−6		46−14		2−20
	10−16		46−15		2−21
	13−10		46−16		2−27
	13−20		46−17		2−30
	13−45		46−22		2−31
	13−50		46−24		2−32
	13−92		46−25		2−33
	13−95		46−30		2−34
	13−98		46−31		2−35
	13−101		46−35		2−36
	14−1		46−38		2−37
	15−17		46−39		2−38
	15−21		46−40		2−39
	16−7		46−50		2−40
	16−10		46−53		2−41
	16−15		50−32		2−42
	16−25		50−35		2−43
	17−12		64−7		2−44
	17−13		64−9		2−45
	17−72		64−10		2−46
	17−74		64−13		2−47
	17−107		64−15		2−53
	17−108		64−17		2−54
	17−109		64−20		2−55
	17−111		64−22		2−56
	18−14		64−24		2−57
	19−1		64−28		2−58
	19−8		64−29		2−59
	19−9		64−31		2−60
	20−1		64−38		3−4
	20−2		64−39		3−5
	20−3		64−42		3−7
	20−4		64−51		3−8
	20−7		64−53		3−14
	20−8		64−55		4−1
	20−9		64−56		4−3
	20−14		64−57		4−5
	20−16		64−58		4−45
	20−21		64−59		4−48
	20−30		64−60		4−49
	20−31		64−61		4−50
	20−34		64−66		4−51
	20−35		64−68		4−52
	20−36		64−70		4−53
	20−40		67−3		4−54
	20−50		67−6		4−55
	20−57				4−60
	20−62				4−61
	20−65				5−2
	20−76				8−13
	20−80				13−2
	20−84				13−5
	20−335				13−6
	20−336				13−7
	20−381				13−62
	23−8				13−70
	27−1				13−130
	27−2				13−131
	27−9				13−144
	41−7				15−8
	41−8				16−11
	41−9				17−110
	41−10				
	41−11				

Section III. Numerical Index

PART NUMBER	FIGURE AND INDEX NO.
MS35338−140	4−6
	4−33
	4−34
	4−35
	15−36
MS35338−141	1−76
	2−2
	3−1
	4−8
	4−9
	4−36
	7−3
	8−4
	8−30
	16−24
	20−336
MS35338−145	1−6
	3−2
MS35338−148	8−15
MS35338−57	4−4
MS35489−107	19−97
MS35489−33	13−69
MS35489−40	27−12
MS35489−46X	20−64
MS35489−62	13−122
MS35489−9	13−111
	13−114
	13−119
MS35649−224	13−56
	13−104
	13−181
MS35649−2254	2−27
	2−30
	2−32
	2−34
	2−44
	2−53
	2−59
	13−62
MS35649−244	13−118
	13−129
	14−9
	14−10
	14−11
	14−12
	14−13
	23−3
MS35649−264	16−4
	16−21
	16−25
	16−26
	17−18
	20−10
	20−17
	20−61
	20−338
	25−6
	26−7
	27−3
	27−11
	27−35
	46−20
	46−21
	64−4
MS35649−284	13−74
	15−39
	15−40
	16−19
	20−52
	27−7
	67−13
MS35650−304	4−66
	4−68
	14−1
	16−7
	16−10
	17−74
	20−21
	20−335
	23−8
	27−9
	46−22
	46−53
	50−35
	64−9
	64−17
	64−24
	64−56
MS35650−3254	13−5
	13−70
MS35691−19	1−76
	7−3
MS35691−23	16−24
	20−336
MS35691−7	15−8
MS35842−15	13−127
MS35842−16	13−128
MS39087−4	15−21
MS39171−13	11−12
MS51484−05	10−35
MS51848−50	2−44
	2−59
MS51858−3	16−14
MS51858−5	15−37
MS51957−13	15−26
MS51957−14	13−129
MS51957−15	2−301
	13−118
	20−58
	64−71
MS51957−17	15−28
	18−11
	23−3
MS51957−20	13−107
	19−5
	19−10
	19−11
	19−12
	19−14
MS51957−22	18−6
MS51957−23	18−3
MS51957−26	13−115
	13−120
MS51957−28	2−24
	2−50
	15−25
	20−337
MS51957−29	20−61
MS51957−30	5−26
	8−19
	10−12
	14−2
	16−4
	16−21
	16−25
	18−17
	19−3
	46−27
MS51957−31	16−12
	16−16
	24−21
	27−11
	46−35
MS51957−32	14−42
	16−26
	17−18
	20−10
	20−17
	20−338
	26−11
	27−3
	27−35
	46−20
	46−21
	64−4
MS51957−33	26−7
	64−67
MS51957−34	13−125

Section III. Numerical Index

PART NUMBER	FIGURE AND INDEX NO.
MS51957−35	4−43
	4−44
	14−41
	15−25
MS51957−36	18−13
	18−16
MS51957−43	2−16
	19−2
	20−6
	20−12
MS51957−44	4−58
	16−17
MS51957−45	13−73
	18−2
	18−15
	19−13
	26−2
	67−13
MS51957−46	13−56
	13−74
	13−78
	13−181
	14−3
	16−1
	16−2
MS51957−47	20−52
MS51957−48	19−17
MS51957−49	16−19
MS51957−50	15−40
MS51957−51	15−39
	19−4
	19−7
MS51957−52	13−126
	18−7
MS51957−66	27−1
MS51957−7	13−104
MS51957−82	16−11
MS51958−107	16−5
MS51958−60	13−10
MS51958−61	19−8
	19−9
	41−11
	41−12
	46−14
	64−53
	64−68
MS51958−62	13−45
	17−12
	17−13
	17−107
	17−108
	17−109
	17−111
	19−1
	20−1
	20−2
	20−3
	20−4
	20−7
	20−8
	20−9
	20−14
	20−16
	20−30
	20−31
	20−35
	20−40
	20−57
MS51958−63	9−6
	10−6
	10−16
	13−92
	13−101
	17−12
	20−34
	20−35
	20−36
	20−65
	20−76
	20−80
	20−84
	20−336
	20−381
	27−2
	27−9
	46−2
	46−8
	46−9
	46−15
	46−16
	46−17
	46−24
	46−25
	46−30
	46−31
	46−35
	46−38
	46−39
	46−40
	46−50
	46−53
	64−7
	64−9
	64−10
	64−13
	64−15
	64−17
	64−20
	64−22
	64−24
	64−28
	64−29
	64−31
	64−38
	64−39
	64−42
	64−51
	64−55
	64−56
	64−57
	64−58
	64−59
	64−60
	64−61
	64−66
	64−70
	67−3
	67−6

Section III. Numerical Index

PART NUMBER	FIGURE AND INDEX NO.
MS51958−64	13−45 13−50 13−95 13−98 20−50 41−7 41−8 41−9 41−10
MS51958−65	4−66 4−68 16−10 50−32 50−35
MS51958−66	15−21 16−15 20−62 20−335
MS51958−67	13−20 13−59 17−74 23−8
MS51958−68	14−1 17−72 18−14 20−21 23−8
MS51958−81	13−144
MS51959−51	27−7
MS51964−101	20−336
MS51967−2	11−16
MS51967−20	1−6
MS51967−24	4−41
MS51968−21	3−2
MS51968−30	1−2
MS51971−1	4−48 4−50
MS51971−10	8−15
MS85049/10−116W	3−94 3−99 3−103
MS90064−17	1−20 2−71 3−6 4−6 4−19 4−38 4−47 9−1
MS90725−6	13−131
MS90728−192	4−41
MS91528−2F4B	14−39
MS9320−05	4−29
MS9320−08	10−18
MS9320−10	4−45 4−48 4−50 4−51 4−52 4−53 4−54 4−55 9−7 9−8 9−9 9−15 10−1 10−35
MS9320−11	9−2
MS9320−12	9−2 9−3
MS9320−14	5−7 10−2
MS9320−17	4−41
MS9349−07	20−343
MS9349−11	20−344
MS9349−17	20−342
MS9349−21	19−98 20−340
MS9349−25	20−345
MS9349−27	20−341
MSA37TB2	20−339
MTC−353−0512FP	47−9
MU250−60HZ	33−51
N10−427J001	18−15 19−13
N425−838	3−9 3−10 18−8
NAS1149C0663R	4−9 4−36 8−4 8−30 16−5 16−24
NAS1454C6A−0600	1−76
NAS1515H06	16−14
NAS1515H3	15−37
NAS1829C6J12	64−70
NAS1831−4C10	20−338
NAS1831A3B06	15−26
NAS1831A4C16	14−2
NAS1831A5D48	14−3
NAS1831C4B10	2−301
NAS1831C6E10	17−74 20−335
NAS1831C6E20	20−62
NAS1831H6E16	13−50
NAS43DD3−20FC	15−39
NAS43DD3−32N	14−1
NAS620−6L	10−12
NAS620C2	13−104
NAS620C4L	7−1
NAS620C6	5−26 8−19 13−49 13−115 13−120 13−125 14−41 14−42 24−21 26−11 27−3 27−11 27−35 64−67
NAS671C4	15−28
NAS671C6	14−41 14−42 24−21 26−11
NE51H	35−17
NHL−20	58−4 59−7
NP4−12	21−2
NQOD430M100CUVH	51−10
NV105C−4	11−14
OT3	35−1 36−1
P05003111001112	51−55 53−
P092256−000001	51−38
P092256−000002	51−37
P092256−000003	51−39
P10S331	17−13
P10S331−2XXX	17−14
P215C	40−12
P4006−1420	17−80
P40P42D12P1−24	27−9
P67−0000SD	38−15
P68−00019A	38−16
PA−320217	37−22

Section III. Numerical Index

PART NUMBER	FIGURE AND INDEX NO.
PAN022	52−15
PAN028	52−16
PB304ML125 1 NB	33−39
PB424CC200 1 NB	33−34
PB424CC225 1 NB	33−34
PC642C−150LCW	2−298 67−16
PCB1B−10A	2−298 67−16
PED001	52−22
PFG001	52−21
PR−14−2−100−1/4−9E	3−86
PR29−27567−1	54−31
PRB650	41−5
PS−1270	33−20
PS004	46−1
PSDA 5810/03453	19−14
PSF106A−6638	13−113
PSF106A−6639	13−117
PT−MPS800−11221	64−51
Q2L3225	35−2
QOB115VH	51−16
QOB115VHGFI	51−17
QOB120VH	51−12
QOB230VH	51−14 51−15 51−18
QOB235VH	51−13
QOB3100VH	51−11
QT4A1BD	22−13
R−2S40−TP	51−21
R296600−317	18−70
R296600−318	18−71
R296600−319	19−20
R296600−320	19−21
R296600−321	19−22
R296600−322	19−23
R296600−323	19−24
R296600−324	19−25
R296600−325	17−35
R296600−326	19−26
R296600−327	19−27
R296600−328	18−72
R296600−329	19−28
R296600−330	19−29
R296600−331	19−30
R296600−332	19−31
R296600−333	19−32
R296600−334	19−33
R296600−335	19−34
R296600−336	19−35
R296600−338	19−36
R4580−XXX	18−2
R4596−1	18−14
R4983−XXX	18−2
R501373	37−46
R61433	37−64
R66CB16	33−52
R700A−66−B1−A25	33−53
R81912	37−62
R97350	37−66
RB−67−2A−SHANK−M	50−15 50−21
RBC−24	64−30
RC13205	4−8
RCD135−40R0J	62−1
RCR07G563JS	15−29
RE13732	37−38
RE27667	37−65
RE31694	37−58
RE38087	37−48
RE43266	37−39
RE44538	37−63
RE48159	37−47
RE50455	37−56
RE62418	37−56
REL007	52−18
RER50F3R01M	20−72
RER65FR100R	27−10
RER75F51R1R	13−37
RER75F80R6R	13−36
RF11692	13−70
RF13125	46−22
RF13126	64−62
RF13219	2−14 2−17
RF13229	2−15
RF13230	2−16
RF14326	20−73
RF15008	4−66 4−68
RF15009−1	20−381
RF15009−2	20−381
RF1784B	4−43 4−44
RFN−363	18−16
RIF−1	51−22
RJ45S−24−4	46−14 64−60
RLCBSR1−4−01	54−19 54−21
RLR07C2740FS	24−20
RLR20C4701GS	14−17
RM004	46−2
RNC55H1623FS	14−23
RSS−200SP1	54−2
RSX 10−1	51−3
RUB001	52−20
RVC6LYA502B	14−16
RW47V101	16−7
RW47V122	16−8
RWR78S1000FS	24−19
S1006−20	20−401 46−192
S130NG11CAD12 155NNEF1	33−46
S19−350	51−60
S19−690	51−59
S353−208	3−75
S4HQ250BRRAS4	56−7 56−8 56−9
S53BZ	8−37
S830A1005−1	33−13
SC628MP	23−2
SCH 75W	5−48 10−39 11−19
SEA001	52−4
SG1000	18−7
SG1001	19−4
SG1002	19−7

Section III. Numerical Index

PART NUMBER	FIGURE AND INDEX NO.
SHELL DIALA AX	15−10
SJ3560	64−8 64−16 64−23 64−27
SK1343	4−8
SKMH021996	13−184
SKMH022096	13−185
SM2−641	2−28 2−29 2−54 4−52
SM2−641−1	4−52
SM2−641−2	4−52
SMCC44116C	27−7
SP2085−RES911555	50−33
SPR003	52−13
SPS−210	3−79 33−50 67−14
SPS3404	17−3
SPS3406	17−9
SPS3407	20−13
SPS3408	20−15
SPS3409	17−5
SPS3410	17−11
SPS3411	17−7
SPS3412	17−1
SQV400−1222	25−9 43−9
SS−2−MHC−4S	2−10
SS−4−MHC−4S	2−9
SW−92	18−3
SW−95	18−13
SW−F88S	18−13
SW−F89S	18−3
SW0023A−FFF	20−22
SW184A	20−23
SWI001	52−19
T06059T	37−27
T19044	37−57
T20243	37−61
T3KD1930	64−20
T610−0026−CS	3−87
T631A1022	3−89
T631A1105	3−89
T713−0013	3−87
T874A1036Q674A1019	51−52
T874B1019	33−14
TBJC	15−38 23−15
TFT−86077	1−7 1−8 1−14 2−36
TFT−86079	3−3
TFT−86081	2−36
TFT−86083	1−7 1−12 1−13 1−14 1−15 1−16 1−18 2−63
TGTR215−1	51−19
TH20199A(MODIFIED)	13−10
TH20211A(MODIFIED)	13−11
TH2101	13−8
THE009	52−3
THE012	52−2
THE013	52−8
THE014	52−1
TIM016	52−7
TK−1	3−78
TNG1−8−124	17−77
TP1040	15−35
TR200R	35−7
TS−3487	15−10
TT142N16KOF	58−2 59−6
TY21767	37−40
UPS12−140FR	61−1
UT141DL400	19−2
V2050G−A	38−9
V2075G−A	38−11
VA−1587F	13−10
VGL2CL	38−10
VGU−2	38−12
VKS−8287	13−8
WA601−B09	33−4
WC596/12−4	13−155
WC596/13−3	20−313 20−320 20−323 34−7 45−79
WC596/137−1	45−57
WC596/14−2	45−78
WC596/168−1	20−48 46−49
WF1814/01−005	20−43 46−43
WF1814/58−D5100	51−32 51−36
WHE001	52−10
WZG110−AM39−92	21−8
X−758−6	37−33
X−786−70	37−28
X−796−6	37−30
X3872A	64−25
X7143A	64−14 70−3
Y101132C203NQ	33−35
Z274−658	3−81
Z28B4	26−2
ZB90T5/15	26−1

Section IV. Reference Designation Index

REFERENCE DESIGNATION	FIGURE AND INDEX NO.
1	1−1
	2−
1A26	2−297
1A28	2−298
1AT1	2−19
1AT2	2−20
1AT3	2−21
1AT4	2−22
1AT5	2−47
1AT9	2−23
1AT10	2−24
1AT11	2−24
1AT101	2−19
1AT102	2−46
1AT103	2−47
1AT104	2−48
1AT109	2−49
1AT110	2−50
1AT111	2−50
1CP1	20−392
1CR1	2−26
1CR2	2−26
1CR101	2−52
1CR102	2−52
1DC1	2−27
1DC101	2−53
1FL1/101	2−14
1FL2/102	2−14
1FL3/103	2−15
1FL4/104	2−16
1FL5/105	2−17
1FL6	2−18
1S1	2−28
1S2	2−29
	2−54
1S101	2−54
1W900	20−421
1W900−1	20−422
1W901	20−423
1WG1	2−30
1WG2	2−31
1WG3	2−32
1WG4	2−33
1WG5	2−67
1WG6	2−34
1WG7	2−35
	2−68
1WG8	2−70
1WG10	2−36
1WG11	2−37
1WG12	2−39
1WG13	2−38
1WG14	2−40
1WG15	2−41
1WG16	2−42
1WG17	2−43
1WG18	2−44
1WG19	2−45
1WG101	2−55
1WG102	2−56
1WG103	2−57
1WG104	2−58
1WG106	2−59
1WG107	2−60
1WG108	2−62
1WG109	2−61
2	1−2
	3−
2A1	3−15
	4−
2A1A1	4−14
	5−
2A1A1A1	5−1
	6−
2A1A1A1MS4	6−5
2A1A1A1S1	6−3
2A1A1A1S1−1	6−3
2A1A1A2	5−2
	7−
2A1A1A2A1	7−2
2A1A1A2MP1	7−6
2A1A1A2MP2	7−5
2A1A1A2MP4	7−1
2A1A1A3	11−
2A1A1A3A1	11−1
2A1A1A3MP1	11−2
2A1A1A3MP2	11−3
2A1A1A3MP3	11−4
2A1A1A3MP4	11−5
2A1A1A3MP7	11−9
2A1A1A3MP8	11−10
2A1A1A3MP9	11−11
2A1A1A3MP10	11−12
2A1A1A3MP11	11−13
2A1A1A3MP12	11−14
2A1A1A3MP13	11−15
2A1A1A3MP14	11−16
2A1A1A3MP15	11−17
2A1A1A4	5−5
2A1A1A5	5−6
2A1A1A6	5−7
2A1A1A7	5−8
2A1A1B1	5−9
2A1A1B1MP1	5−12
	8−7
2A1A1B1MP2	5−10
	8−5
2A1A1B1MP3	5−11
	8−6
2A1A1B1MP4	5−13
	8−8
2A1A1B1MP5	5−14
	8−9
2A1A1J1	5−43
2A1A1J2	5−44
2A1A1M1	5−29
2A1A1M3	5−4
2A1A1M4	5−31
2A1A1MP9	5−28
2A1A1MP100	11−18
2A1A1MS2	5−32
2A1A1MS100	5−23
2A1A1P1	5−41
2A1A1P4	5−42
2A1A1RT1	5−3
2A1A1S3	5−17
2A1A1S3−1	5−15
2A1A1S4	5−17
2A1A1S4−1	5−15
2A1A1S5	5−19

Section IV. Reference Designation Index

REFERENCE DESIGNATION	FIGURE AND INDEX NO.
2A1A1S5S1	5−22
2A1A1S6	5−19
2A1A1S7	5−19
2A1A1S8	5−19
2A1A1TB1	5−24
2A1A1TB2	5−25
2A1A1TB3	5−26
2A1A1W1	5−33
2A1A1W1J2	5−35
2A1A1W1P1	5−34
2A1A1W2	5−36
2A1A1W2P2	5−37
2A1A1W2P5	5−38
2A1A1W3	5−36
2A1A1Z1	5−21
2A1A2	4−9
2A1A2A1	4−10
2A1A2A2	4−11
2A1A2A3	4−12
2A1A3	4−15 8− 9−
2A1A3A1	6− 8−1 10−18
2A1A3A1MS4	6−5
2A1A3A1S1	6−3
2A1A3A1S1−1	6−3
2A1A3A2	7− 8−13 10−35
2A1A3A2A1	7−2
2A1A3A2MP1	7−6
2A1A3A2MP2	7−5
2A1A3A2MP4	7−1
2A1A3A3	11−
2A1A3A3A1	11−1
2A1A3A3MP1	11−2
2A1A3A3MP2	11−3
2A1A3A3MP3	11−4
2A1A3A3MP4	11−5
2A1A3A3MP6	11−7
2A1A3A3MP7	11−9
2A1A3A3MP8	11−10
2A1A3A3MP9	11−11
2A1A3A3MP10	11−12
2A1A3A3MP12	11−14
2A1A3A3MP13	11−15
2A1A3A3MP14	11−16
2A1A3A3MP15	11−17
2A1A3A3MP16	11−6
2A1A3A4	8−10 10−20
2A1A3A5	8−15 10−32
2A1A3A6	8−12
2A1A3B1	8−4 10−19
2A1A3CP1	4−64
2A1A3CP2	4−65
2A1A3FL1−XXXX	4−60
2A1A3FL2−XXXX	4−61
2A1A3MP2	9−8
2A1A3MP9	8−32 10−36
2A1A3MP100	11−18
2A1A3MS6	8−39 10−22
2A1A3P1	8−35 10−17
2A1A3RT1	8−14 10−4
2A1A3RT2	8−11 10−14
2A1A3S1	4−28 8−16
2A1A3S2	8−17 10−26
2A1A3TB1	8−19 10−12
2A1A3W1	8−21
2A1A3W1J3	8−22
2A1A3W1P7	8−23
2A1A3W2	8−24 9−10
2A1A3W2J1	8−27 9−13
2A1A3W2P3	8−25 9−11
2A1A3W2P4	8−26 9−12
2A1A3W3	8−18
2A1A3Z1	8−40 9−5
2A1A3Z2	8−41
2A1A4	4−6
2A1A5	4−8
2A1A8	4−58
2A1A8MP1	4−59
2A1E1	4−35
2A1FL1	4−66
2A1FL2	4−68
2A1J2	4−22
2A1J3	4−24
2A1J4	4−24
2A1J5	4−24
2A1J6	4−24
2A1MP1	4−13
2A1MP2	4−13
2A1MP3	4−13
2A1MP4	4−13
2A1MP5	4−13
2A1MP6	4−13
2A1MP7	4−13
2A1MP8	4−13
2A1MP12	4−67 4−69
2A1MS3	4−18
2A1MS4	4−17
2A1S1	4−52
2A1W1	4−20
2A1W1P1	4−21
2A1W2	4−25
2A1W2P2	4−27
2A1W2P5	4−26
2A1WG05	4−50
2A1WG06	4−54
2A1WG07	4−55
2A1WG1	4−5
2A1WG2	4−4
2A1WG3	4−3 4−48
2A1WG4	4−2 4−49

Section IV. Reference Designation Index

REFERENCE DESIGNATION	FIGURE AND INDEX NO.
2A1WG5	4−1
2A1WG10	4−30
2A2	3−2 12−
2A2A1	12−1
2A2A1MP1	12−14
2A2A1MP2	12−14
2A2A1MP3	12−14
2A2A1MP4	12−14
2A2A1MP5	12−14
2A2A1MP6	12−14
2A2A1MP7	12−14
2A2A1MP8	12−14
2A2A1MP9	12−14
2A2A1MP10	12−14
2A2A1MP11	12−14
2A2A1MP12	12−14
2A2A1MP13	12−14
2A2A1MP14	12−14
2A2A1MP15	12−14
2A2A1MP16	12−14
2A2A1MP17	12−14
2A2A1MP18	12−14
2A2A1MS1	12−2
2A2A1MS3	12−13
2A2A1WG1	12−3
2A2WG4	12−8
2A2WG4MP1	12−9 12−12
2A3	4−45
2A3A1	4−46
2A4	4−43
2A5	3−9
2A6	3−13
2A7	4−45
2A7A1	4−46
2A8	4−44
2A9	3−10
2A10	3−86
2A11	3−87
2A12	3−86
2A13	3−87
2A14	3−79
2AT1	3−12
2DC1	3−14
2HR1	3−70
2HR1B1	3−76
2HR1B1H2	3−91
2HR1B1S1	3−90
2HR1H1	3−77
2HR1H2	3−77
2HR1H3	3−77
2HR1K1	3−75
2HR1S1	3−73
2HR1S2	3−73
2HR1S3	3−74
2HR1S4	3−78
2MP1	3−1 3−80 12−10
2S1	3−82
2S1F1	3−83
2S2	3−89
2T1	3−88
2TB1	3−81
2W5	3−16 3−17
2W5P1	3−18
2W5P2	3−19
2W6	3−20
2W6P1	3−21
2W6P2	3−22
2W14	3−23
2W14P1	3−24
2W14P2	3−25
2W15	3−26
2W15P1	3−27
2W15P2	3−28
2W20	3−29 3−30 8−28 9−17
2W20J3	3−34
2W20P1	3−31
2W20P2	3−32
2W20P3	3−33
2W21	3−45 3−92
2W21P1	3−46 3−93
2W21P2	3−47 3−95
2W26	9−14
2W26J3	3−57
2W26J5	3−58
2W26P1	3−53
2W26P2	3−54
2W26P3	3−55
2W26P4	3−54
2W26P5	3−55
2W26P6	3−56
2W27	3−67 3−105
2W27P1	3−68 3−106
2W27P2	3−69 3−107
2W27P3	3−68 3−106
2W28	3−71
2W29	3−97
2W29P1	3−98
2W29P2	3−100
2W30	3−101
2W30P1	3−102
2W30P2	3−104
2W900	4−62
2W901	4−63
2WG1	3−11
2WG2	3−5
2WG3	3−3
2WG4	3−4
3	2−1 13−
3/103W904	13−187
3/103W905	13−188
3A1	13−17 14−
3A1A1	14−1
3A1A2	14−2
3A1A3	14−3
3A1A3BT1	14−4
3A1A3BT2	14−4

Section IV. Reference Designation Index

REFERENCE DESIGNATION	FIGURE AND INDEX NO.	REFERENCE DESIGNATION	FIGURE AND INDEX NO.	REFERENCE DESIGNATION	FIGURE AND INDEX NO.
3A1DS1	14−5	3A1K1MP1	14−7	3A3A2	13−22
3A1DS2	14−5	3A1M1	14−9	3A3A3	13−23
3A1DS3	14−5	3A1M2	14−9	3A3A4	13−24
3A1DS4	14−5	3A1M3	14−10	3A4	13−25
3A1DS5	14−5	3A1M4	14−11	3A5	13−26
3A1DS6	14−5	3A1M5	14−12	3A6	13−7
3A1DS7	14−5	3A1M6	14−13	3A7	13−27
3A1DS8	14−5	3A1MP1	14−40		15−
3A1DS9	14−5	3A1R1	14−14	3A7A1	15−25
3A1DS10	14−5	3A1R2	14−14	3A7A1A1	15−26
3A1DS11	14−5	3A1R3	14−15	3A7A1A1CR1	15−27
3A1DS12	14−5	3A1R4	14−16	3A7A1A2	15−28
3A1DS13	14−5	3A1R5	14−17	3A7A1MP5	15−31
3A1DS14	14−5	3A1S1	14−18	3A7A1S3	15−30
3A1DS15	14−5	3A1S2	14−19	3A7A2	15−4
3A1DS16	14−5	3A1S3	14−19	3A7A3	15−6
3A1DS17	14−5	3A1S4	14−19	3A7A4	15−13
3A1DS18	14−5	3A1S5	14−18	3A7C01	15−10
3A1DS19	14−5	3A1S6	14−18	3A7E2	15−18
3A1DS20	14−5	3A1S7	14−18	3A7E22	15−24
3A1DS21	14−5	3A1S8	14−18	3A7E23	15−24
3A1DS22	14−5	3A1S9	14−20	3A7HP1	15−17
3A1DS23	14−5	3A1S10	14−21	3A7MP1	15−22
3A1DS24	14−5	3A1S11	14−22	3A7MP2	15−23
3A1DS25	14−5	3A1TB1	14−41	3A7MP3	15−19
3A1DS26	14−5	3A1TB2	14−42	3A7MP4	15−20
3A1DS27	14−5	3A1VR1	14−23	3A7MP6	15−38
3A1DS28	14−5	3A1XDS1	14−24	3A7MP7	15−1
3A1DS29	14−5	3A1XDS2	14−25	3A7MP8	15−41
3A1DS30	14−5	3A1XDS3	14−25	3A7MS1	15−9
3A1DS31	14−5	3A1XDS4	14−25	3A7MS2	15−8
3A1DS32	14−5	3A1XDS5	14−25	3A7MS3	15−21
3A1DS33	14−5	3A1XDS6	14−25	3A7MS48	15−16
3A1DS34	14−5	3A1XDS7	14−25	3A7S1	15−32
3A1DS35	14−5	3A1XDS8	14−25	3A7S2	15−33
3A1DS36	14−5	3A1XDS9	14−25	3A7T1	15−35
3A1J1	14−45	3A1XK1	14−8	3A7T2	15−36
3A1J2	14−45	3A2	13−18	3A7T3	15−37
3A1J3	14−45	3A2P1	13−90	3A7TB1	15−40
3A1J4	14−46	3A2P2	13−86	3A7TB2	15−40
3A1J5	14−46	3A3	13−20	3A7TB4	15−40
3A1K1	14−6	3A3A1	13−21	3A7W1	15−15

Section IV. Reference Designation Index

REFERENCE DESIGNATION	FIGURE AND INDEX NO.	REFERENCE DESIGNATION	FIGURE AND INDEX NO.	REFERENCE DESIGNATION	FIGURE AND INDEX NO.
3A7XV1	15−34	3A12A4E3	16−6	3A12W2	16−36
3A8	13−28	3A12A4E4	16−6	3A12W3	16−38
3A9	13−30	3A12A4R1	16−7	3A12W4	16−39
3A9C1	13−39	3A12A4R2	16−7	3A12W5	16−40
3A9C2	13−39	3A12A4R3	16−7	3A12W6	16−41
3A9C3	13−39	3A12A4R4	16−7	3A12W7	16−42
3A9C4	13−39	3A12A4R5	16−7	3A12W15	16−25
3A9C5	13−39	3A12A4R6	16−7	3A12W902	16−43
3A9C6	13−39	3A12A4R7	16−7	3A12W903	16−44
3A9C7	13−39	3A12A4R8	16−7	3A12W904	16−45
3A9C8	13−39	3A12A4R9	16−7	3A12W905	16−46
3A9C9	13−39	3A12A5	16−10	3A12W906	16−47
3A9C10	13−39	3A12A6	16−11	3A12W907	16−48
3A9C11	13−39	3A12A7	16−12	3A12W908	16−49
3A9C12	13−39	3A12A8	16−13	3A12W909	16−50
3A9C13	13−39	3A12A9	16−14	3A12W910	16−51
3A9C14	13−39	3A12A10	16−15	3A12W911	16−52
3A9C15	13−39	3A12A11	16−16	3A12W912	16−53
3A9C16	13−39	3A12A12	16−26	3A12W913	16−54
3A9C17	13−39	3A12C1	16−17	3A12W914	16−55
3A9C18	13−39	3A12C2	16−17	3A12W915	16−56
3A9C19	13−39	3A12E10	16−35	3A12W916	16−57
3A9C20	13−39	3A12MP3	16−20	3A12W917	16−58
3A9MP4	13−33	3A12MP5	16−21	3A12W918	16−59
3A9MP5	13−34	3A12MP6	16−24	3A12W919	16−60
3A9MP6	13−35	3A12MS50	16−33	3A12W923	16−61
3A9MS1	13−38	3A12MS50E1	16−34	3A13	13−45
3A9R1	13−36	3A12MS50E2	16−34	3A13CB1	13−47
3A9R2	13−37	3A12MS50E3	16−34	3A13CB2	13−48
3A10	13−40	3A12MS50E4	16−34	3A13CB3	13−49
3A11	13−42	3A12MS87	16−28	3A13DS6	13−51
3A12	13−44 16−	3A12MS91	16−27	3A13DS7	13−51
3A12A1	16−1	3A12MS126	16−32	3A13F1	13−52
3A12A2	16−2	3A12R3	16−8	3A13F2	13−52
3A12A3	16−3	3A12R4	16−8	3A13F3	13−52
3A12A4	16−4	3A12R5	16−9	3A13MP1	13−55 14−47
3A12A4CR1	16−5	3A12R6	16−9	3A13XDS6	13−53
3A12A4CR2	16−5	3A12S1	16−18	3A13XDS7	13−53
3A12A4CR3	16−5	3A12T1	16−19	3A13XF1	13−54
3A12A4E1	16−6	3A12TB1	16−29	3A13XF2	13−54
3A12A4E2	16−6	3A12TB1E7	16−30	3A13XF3	13−54
		3A12W1	16−37		

Section IV. Reference Designation Index

REFERENCE DESIGNATION	FIGURE AND INDEX NO.	REFERENCE DESIGNATION	FIGURE AND INDEX NO.	REFERENCE DESIGNATION	FIGURE AND INDEX NO.
3AT1	13−181	3MP16	13−152	3PS2P3	13−85
3B1	13−56	3MP17	13−189	3PS3	13−91
3B1MP1	13−57	3N3	13−131	3PS4	13−93
3B1MP2	13−58	3N3F4	13−132	3PS5	13−93
3B2	13−56	3N3F5	13−132	3PS6	13−96
3B3	13−59	3N3F6	13−132	3PS7	13−99
3B3B2	13−62	3N3F7	13−133	3PS8	13−102
3B3B2MP1	13−63	3N3F8	13−133	3S2	13−103
3B3MP1	13−65	3N3F9	13−133	3S3	13−103
3B3MP9	13−66	3N3F10	13−134	3S4	13−104
3B3MP10	13−61	3N3F11	13−134	3S5	13−104
3B3MP20	13−67	3N3F12	13−134	3S7	13−107
3B4	13−68	3N3F13	13−135	3S8	13−113
3DC1	13−2	3N3K1	13−137	3S9	13−118
3DS1	13−154	3N3K2	13−138	3S10	13−117
3DS2	13−154	3N3K3	13−139	3S13	13−129
3DS3	13−154	3N3K4	13−139	3T1	13−130
3DS4	13−154	3N3K5	13−139	3T1P1	13−85
3DS5	13−154	3N3K6	13−139	3T1P2	13−85
3FL1	13−70	3N3K7	13−139	3TB1	13−124
3FL4	13−73	3N3XF4	13−136	3TB2	13−126
3FL5	13−73	3N3XF5	13−136	3TB3	13−123
3FL6	13−73	3N3XF6	13−136	3TB4	13−125
3FL7	13−73	3N3XF7	13−136	3TB5	13−123
3FL8	13−73	3N3XF8	13−136	3TB6	13−123
3FL9	13−75	3N3XF9	13−136	3TB7	13−125
3FL10	13−75	3N3XF10	13−136	3V1	13−8
3FL11	13−75	3N3XF11	13−136	3W1	13−156
3FL12	13−75	3N3XF12	13−136	3W2	13−157
3FL13	13−75	3N3XF13	13−136	3W3	13−158
3HP1	13−78	3N3XF14	13−136	3W4	13−159
3J1	13−155	3N3XK2	13−140	3W5	13−160
3J9	13−1	3N3XK3	13−141	3W6	13−161
3L1A1	13−10	3N3XK4	13−141	3W7	13−162
3L1A2	13−11	3N3XK5	13−141	3W8	13−163
3L1MS1	13−9	3N3XK6	13−141	3W9	13−164
3MP4	13−149	3N3XK7	13−141	3W10	13−165
3MP9	13−106	3PS1	13−80	3W11	13−166
3MP10	13−142	3PS1J1	13−84	3W14	13−167
3MP11	13−143	3PS1J2	13−84	3W15	13−168
3MP14	13−150	3PS2	13−82	3W16	13−169
3MP15	13−151	3PS2P2	13−85	3W17	13−170

Section IV. Reference Designation Index

REFERENCE DESIGNATION	FIGURE AND INDEX NO.	REFERENCE DESIGNATION	FIGURE AND INDEX NO.	REFERENCE DESIGNATION	FIGURE AND INDEX NO.
3W18	13−171	4/104W118	18−32	4/104W316	17−40
3W19	13−172	4/104W119	18−33	4/104W319	17−41
3W20	13−173	4/104W120	18−34	4/104W320	17−42
3W21	13−174	4/104W121	18−35	4/104W321	17−43
3W22	13−175	4/104W122	18−36	4/104W322	17−44
3W101	13−176	4/104W123	18−37	4/104W323	17−45
3W102	13−177	4/104W128	18−38	4/104W400	18−73
3W103	13−178	4/104W129	17−33	4/104W401	18−39
3W104	13−179	4/104W132	17−34	4/104W401P1	18−40
3W105	13−180	4/104W200	18−70	4/104W401P2	18−41
3W900	13−184	4/104W201	18−71	4/104W402	18−43
3W901	13−185	4/104W202	19−20	4/104W402P1	18−44
3W902	13−186	4/104W203	19−21	4/104W402P2	18−45
3WG1	13−5	4/104W204	19−22	4/104W402P3	18−45
3WG2	13−6	4/104W205	19−23	4/104W402P4	18−44
3WG4	13−144	4/104W206	19−24	4/104W403	19−45
3XDS1	13−153	4/104W207	19−25	4/104W403P1	19−46
3XDS2	13−153	4/104W208	17−35	4/104W403P2	19−47
3XDS3	13−153	4/104W209	19−26	4/104W404	18−47
3XDS4	13−153	4/104W210	19−27	4/104W404P1	18−48
3XDS5	13−153	4/104W211	18−72	4/104W404P2	18−49
3Z1	13−148	4/104W212	19−28	4/104W405	17−46
4	2−3	4/104W213	19−29	4/104W406	19−50
4/104	17− 19−99 19−100	4/104W214	19−30	4/104W406P1	19−51
4/104A37	17−113	4/104W215	19−31	4/104W406P2	19−53
4/104W100	17−27	4/104W216	19−32	4/104W407	19−55
4/104W102	18−22	4/104W217	19−33	4/104W407P1	19−56
4/104W103	18−23	4/104W218	19−34	4/104W407P2	19−57
4/104W104	17−28	4/104W219	19−35	4/104W408	17−47
4/104W105	17−29	4/104W220	17−36	4/104W409	17−48
4/104W106	18−24	4/104W221	19−36	4/104W410	19−58
4/104W107	18−25	4/104W222	17−37	4/104W410P1	19−59
4/104W109	18−26	4/104W300	19−37	4/104W410P2	19−60
4/104W110	17−30	4/104W302	19−38	4/104W411	17−49
4/104W111	18−27	4/104W303	19−39	4/104W412	17−50
4/104W112	18−28	4/104W304	19−40	4/104W413	17−51
4/104W113	18−29	4/104W306	19−41	4/104W424	18−51
4/104W114	17−31	4/104W308	19−42	4/104W424P1	18−52
4/104W115	17−32	4/104W309	19−43	4/104W424P2	18−53
4/104W116	18−30	4/104W310	17−38	4/104W424P3	18−53
4/104W117	18−31	4/104W311	19−44	4/104W500	19−62
		4/104W315	17−39	4/104W500P1	19−63

Section IV. Reference Designation Index

REFERENCE DESIGNATION	FIGURE AND INDEX NO.	REFERENCE DESIGNATION	FIGURE AND INDEX NO.	REFERENCE DESIGNATION	FIGURE AND INDEX NO.
4/104W501	19−65	4A5	18−7	4PS4F1	17−6
4/104W501P1	19−66	4A6	19−1	4PS5	17−7
4/104W502	18−55	4A7	19−2	4PS5F1	17−8
4/104W502P1	18−56	4A8	19−3	4PS6	17−9
4/104W503	19−68	4A9	19−4	4PS6F1	17−10
4/104W503P1	19−69	4A10	18−17	4PS7	17−3
4/104W504	19−71	4A11	17−15	4PS7F1	17−4
4/104W504P1	19−72	4A12	19−5	4PS8	17−11
4/104W505	18−58	4A13	19−6	4PS8F1	17−12
4/104W505P1	18−59	4A14	19−7	4PS9	17−3
4/104W506	18−61	4A15	19−8	4PS9F1	17−4
4/104W506P1	18−62	4A16	19−9	4TB2	19−17
4/104W507	18−64	4A17	19−10	4TB3	18−21
4/104W507P1	18−65	4A18	19−11	4TB5	17−74
4/104W508	18−67	4A19	19−12	4Z1	17−25
4/104W508P1	18−68	4A20	18−6	4Z1MP1	17−26
4/104W509	19−74	4A21	18−11	4Z1N1	17−16
4/104W509P1	19−75	4A22	18−13		18−
4/104W510	19−77	4A23	18−12	4Z1N2	17−17
4/104W510P1	19−78	4A24	18−3		19−
4/104W511	19−80	4A25	18−16	4Z1N2MP1	19−102
4/104W511P1	19−81	4A26	18−8	5	2−5
4/104W512	19−83	4A27	18−15		20−
4/104W512P1	19−84	4A28	19−13	5/105A1W2	22−14
4/104W513	19−87	4A29	18−14	5/105A10	29−
4/104W513P1	19−88	4A30	19−14	5/105A10A4	29−4
4/104W514	19−90	4A31	19−15	5/105A10A6	29−6
4/104W514P1	19−91	4A32	19−16	5/105A33	20−382
4/104W515	19−94	4A33	18−4	5/105A37	20−396
4/104W515P1	19−95	4A34	18−9	5/105A37W1	20−400
4/104W516	17−52	4A36	17−21	5/105A38	20−384
4/104W518	17−53	4B1	17−18	5/105A39	20−383
4/104W521	17−62	4B2	17−18	5/105A40	20−389
4/104W706	17−54	4DC1	18−10	5/105A41	20−391
4/104W707	17−58	4DC2	18−1	5/105CP1	20−390
4/104W709	17−64	4MS15	18−5	5/105E1	20−388
4/104W710	17−68	4MS42	18−18	5/105FL2	20−381
4/104W710J26	17−69	4PS1	17−1	5/105W600	20−85
4/104W900	17−114	4PS1F1	17−2	5/105W600J4	20−87
4A1	17−13	4PS2	17−3	5/105W600P1	20−86
4A1A1	17−14	4PS2F1	17−4	5/105W601	20−90
4A4	18−2	4PS4	17−5	5/105W601J3	20−92
				5/105W601P1	20−91

Section IV. Reference Designation Index

REFERENCE DESIGNATION	FIGURE AND INDEX NO.
5/105W602	20−94 20−412
5/105W602J9	20−95 20−413
5/105W602P1	20−95 20−413
5/105W604	20−96
5/105W604J10	20−98
5/105W604P1	20−97
5/105W605	20−99
5/105W605J7	20−100
5/105W605P1	20−100
5/105W606	20−101
5/105W606J7	20−102
5/105W606P1	20−102
5/105W610	20−103
5/105W610J20	20−105
5/105W610P1	20−104
5/105W611	20−106
5/105W611J19	20−108
5/105W611P1	20−107
5/105W612	20−109
5/105W612J21	20−111
5/105W612P1	20−110
5/105W613	20−112
5/105W613J18	20−114
5/105W613P1	20−113
5/105W614	20−115
5/105W614P1	20−116
5/105W614P2	20−116
5/105W615	20−117
5/105W615P1	20−118
5/105W615P2	20−119
5/105W616	20−120
5/105W616P1	20−121
5/105W616P2	20−121
5/105W617	20−122
5/105W617P1	20−123
5/105W617P2	20−123
5/105W618	20−124
5/105W618P1	20−125
5/105W618P2	20−125
5/105W619	20−126
5/105W619P1	20−127
5/105W619P2	20−127
5/105W620	20−128
5/105W620J22	20−130
5/105W620P1	20−129
5/105W622	20−131
5/105W622P1	20−132
5/105W622P2	20−133
5/105W623	20−134
5/105W623P1	20−135
5/105W623P2	20−136
5/105W625	20−137
5/105W625P1	20−138
5/105W626	20−139
5/105W626J23	20−141
5/105W626P1	20−140
5/105W627	20−142
5/105W627J17	20−144
5/105W627P1	20−143
5/105W628	20−145
5/105W628J5	20−146
5/105W628P1	20−146
5/105W629	20−147
5/105W629J6	20−148
5/105W629P1	20−148
5/105W630	20−149
5/105W630P1	20−150
5/105W631	20−151
5/105W631P1	20−152
5/105W631P2	20−153
5/105W631P3	20−153
5/105W633	20−154
5/105W633J25	20−155
5/105W633P1	20−156
5/105W634	20−159
5/105W634P1	20−160
5/105W635	20−161
5/105W635J15	20−163
5/105W635P1	20−162
5/105W636	20−165
5/105W636J11	20−167
5/105W636P1	20−166
5/105W637	20−169
5/105W637J16	20−171
5/105W637P1	20−170
5/105W638	20−173
5/105W638P1	20−174
5/105W638P2	20−175
5/105W639	20−176
5/105W639P1	20−177
5/105W639P2	20−177
5/105W640	20−179
5/105W641	20−182
5/105W642	20−185
5/105W643	20−188
5/105W648	20−191
5/105W649	20−193
5/105W660	20−197
5/105W660J12	20−198
5/105W660P1	20−199
5/105W661	20−200 20−416
5/105W661J13	20−201 20−417
5/105W661P1	20−201 20−417
5/105W663	20−202
5/105W663P1	20−203
5/105W663P2	20−204
5/105W664	20−206
5/105W664J15	20−207
5/105W664P1	20−208
5/105W666	20−218
5/105W666P1	20−219
5/105W666P2	20−219
5/105W667	20−221
5/105W667P1	20−222
5/105W667P2	20−222
5/105W668	20−224
5/105W668P1	20−225
5/105W668P2	20−226
5/105W669	20−229
5/105W669P1	20−230
5/105W669P2	20−231
5/105W670	20−234

Section IV. Reference Designation Index

REFERENCE DESIGNATION	FIGURE AND INDEX NO.
5/105W670J11	20−235
5/105W670J28	20−236
5/105W670P1	20−235
5/105W671	20−239
5/105W671J16	20−240
5/105W671P1	20−240
5/105W672	20−241
5/105W672P1	20−242
5/105W672P2	20−242
5/105W673	20−247
5/105W673J11	20−248
5/105W673P1	20−249
5/105W675	20−251
5/105W675P1	20−252
5/105W675P2	20−253
5/105W687P1	20−286
5/105W691	20−301
5/105W692	20−404
5/105W692P1	20−405
5/105W692P2	20−406
5/105W693	20−408
5/105W693P1	20−409
5/105W693P2	20−410
5/105W700	20−302
5/105W700J1	20−303
5/105W701	20−305
5/105W701J2	20−307
5/105W701P1	20−306
5/105W703	20−308
5/105W703J24	20−309
5/105W704	20−310 20−311 20−312
5/105W704J31	20−313
5/105W704P1	20−314
5/105W704P2	20−314
5/105W704P3	20−314
5/105W704P4	20−314
5/105W705	20−316
5/105W706	20−319
5/105W706J31	20−320
5/105W706P1	20−321
5/105W706P2	20−321
5/105W707	20−322
5/105W707J31	20−323
5/105W708	20−326
5/105W709	20−329
5/105W709J29	20−330
5/105W710	20−365
5/105W900	20−393
5/105W901	20−394
5/105W902	20−402
5/105W902A	20−403
5/105W907	20−395
5/105W910	20−399
5/105W911	20−397
5/105W912	20−398
5/105W914	20−420
5/105W916	20−425
5A1	20−80
22−	
5A1A1	22−1
5A1A2	22−2
5A1A3	22−2
5A1A4	22−11
5A1B1	22−12
5A1B2	22−12
5A1PS1	22−13
5A1W1	22−3
5A1W1E1	22−9
5A1W1J1	22−4
5A1W1P1	22−5
5A2	20−1
23−	
5A2DS1	23−1
5A2DS2	23−1
5A2DS3	23−1
5A2DS4	23−1
5A2DS5	23−1
5A2LS1	23−2
5A2M1	23−3
5A2R1	23−4
5A2R2	23−4
5A2S1	23−5
5A2S2	23−6
5A2S3	23−7
5A2S4	23−7
5A2TB1	23−8
5A3	20−2
24−	
5A3A1	24−1
5A3A2	24−2
5A3CR2	24−3
5A3CR3	24−3
5A3CR4	24−3
5A3CR5	24−3
5A3CR6	24−3
5A3CR7	24−3
5A3CR8	24−3
5A3J1	24−4
5A3J2	24−5
5A3J3	24−5
5A3J4	24−6
5A3J5	24−7
5A3J6	24−7
5A3J7	24−4
5A3J8	24−4
5A3J9	24−4
5A3J10	24−8
5A3J11	24−9
5A3J12	24−10
5A3J13	24−10
5A3J14	24−10
5A3K2	24−11
5A3K3	24−12
5A3K4	24−13
5A3K5	24−14
5A3K6	24−13
5A3K7	24−15
5A3K8	24−13
5A3R1	24−19
5A3R2	24−20
5A3TB1	24−21
5A3TB2	24−21
5A3TB3	24−21
5A3XK2	24−16
5A3XK3	24−17
5A3XK4	24−16

Section IV. Reference Designation Index

REFERENCE DESIGNATION	FIGURE AND INDEX NO.
5A3XK5	24−17
5A3XK6	24−16
5A3XK7	24−18
5A3XK8	24−16
5A4A1	20−27
5A4A2	20−29
5A5	20−30
	25−
5A5A1	25−1
5A5A1C01	25−2
	43−2
5A5A1C02	25−3
	43−3
5A5A2	25−4
5A5A4	25−8
5A5DS1	25−19
5A5MP21	43−18
5A5PS1	25−9
5A5PS1F2	25−10
5A5W1	20−378
5A5W2	25−13
5A5W3	25−12
5A6	20−3
	26−
5A6A1	26−5
5A6A2	26−4
5A6B1	26−7
5A6MS3	26−9
5A6MS4	26−11
5A6MS5	26−10
5A6PS1	26−1
5A6PS2	26−2
5A6PS3	26−3
5A6TB1	26−8
5A6W1	26−12
5A6W2	26−13
5A6W3	26−14
5A6W900	26−16
5A7	20−4
	27−
5A7A1	27−1
5A7A2	27−1
5A7A3	27−2
5A7B1	27−3
5A7C2	27−5
5A7C3	27−4
5A7C4	27−4
5A7C5	27−4
5A7CR4	27−6
5A7CR5	27−7
5A7CR6	27−7
5A7DS1	27−8
5A7DS2	27−8
5A7DS3	27−8
5A7K1	27−9
5A7MP6	27−11
5A7R1	27−10
5A7R2	27−10
5A7TB1	27−34
5A7TB4	27−35
5A7W1	27−16
5A7W1J1	27−17
5A7W1J2	27−19
5A7W1J3	27−18
5A7W1P1	27−20
5A7W1P2	27−21
5A7W1P3	27−20
5A7W1P4	27−21
5A7W1P5	27−22
5A8	20−31
5A8B1	20−33
5A8B2	20−33
5A8W1	20−32
5A9	20−7
	28−
5A9A1	28−1
5A9A2	28−2
5A9A3	28−3
5A9A4	28−4
5A9A5	28−5
5A9A6	28−6
5A9A7	28−7
5A9A8	28−8
5A9A9	28−9
5A9A10	28−10
5A9A11	28−11
5A9A12	28−8
5A9A13	28−9
5A9A14	28−10
5A9A15	28−11
5A9A16	28−8
5A9A17	28−9
5A9A18	28−10
5A9A19	28−11
5A9A20	28−12
5A10	20−8
	29−
5A10A1	29−1
5A10A2	29−2
5A10A3	29−3
5A10A4	29−4
5A10A5	29−5
5A10A6	29−6
5A10A7	29−7
5A10A8	29−7
5A11	20−9
5A11B1	20−10
5A11B2	20−10
5A12	20−35
	30−
5A12A3	30−1
5A12A4	30−2
5A12A5	30−3
5A12A6	30−4
5A12A11	30−20
5A12A12	30−5
5A12A13	30−6
5A12A14	30−7
5A12A15	30−6
5A12A18	30−8
5A12A19	30−9
5A12A20A1	30−10
5A12A20A1BT1	30−11
5A12A20A1BT2	30−11
5A12A20A2	30−12
5A12A21	30−13
5A12AT1	30−17
5A12AT2	30−18
5A12AT3	30−14

Section IV. Reference Designation Index

REFERENCE DESIGNATION	FIGURE AND INDEX NO.	REFERENCE DESIGNATION	FIGURE AND INDEX NO.	REFERENCE DESIGNATION	FIGURE AND INDEX NO.
5A12AT4	30−14	5A19	20−66	5PS4	20−5
5A12AT5	30−15	5A19A1	20−67	5PS4F1	20−6
5A12AT6	30−16	5A19PS1	20−68	5PS5	20−65
5A12AT7	30−14	5A24	20−58		21−
5A12AT8	30−14	5A24CR1	20−59	5PS5A1	21−1
5A12AT9	30−14	5A24K1	20−60	5PS5A1BT1	21−2
5A12AT10	30−14	5A24K2	20−61	5PS5A1CB4	21−3
5A13	20−36	5A24TB1	20−62	5PS5A1CB5	21−3
5A13A1	20−37	5A24XK1	20−63	5PS5A1CB6	21−4
5A13A1A1	20−38	5A25	20−50	5PS5A1CB7	21−4
5A13A1B1	20−39	5A25J1	20−51	5PS5A2	21−5
5A13A1B2	20−39	5A25L1	20−52	5PS5A3	21−6
5A13A1B3	20−39	5A25L2	20−52	5PS5A4	21−7
5A13A1B4	20−39	5A25L3	20−52	5PS5A4B1	21−8
5A14	20−40	5A25L4	20−52	5PS5A4B2	21−8
5A14CB1/2	20−41	5A25P1	20−53	5R1	20−72
5A14CB3	20−42	5A25TB1	20−54	5TB1	20−335
5A14F1	20−43	5A32	20−384	5TB3	20−336
5A14F2	20−43	5A33	20−382	5TB4	20−338
5A14F3	20−43	5A34	20−383	5TB5	20−338
5A14F4	20−43	5A35	20−391	5W1	20−332
5A14F5	20−43	5A36	20−389	5W1P1	20−333
5A14J1	20−47	5B1	20−17	5W1P2	20−334
5A14J2	20−47	5B2	20−17	5W108	20−375
5A14J3	20−47	5B3	20−17	5W634	23−9
5A14J4	20−48	5B4	20−17	5W634P1	23−10
5A14J5	20−48	5CP1	20−390	5W634P2	23−11
5A14J6	20−46	5CP2	20−390	5W634P3	23−12
5A14LF1	20−49	5E1	20−388	5W634P4	23−13
5A14XF1	20−44	5FL1	20−73	5W665	20−211
5A14XF2	20−44	5FL2	20−381	5W665J15	20−212
5A14XF3	20−44	5J30	20−74	5W665P1	20−213
5A14XF4	20−44	5J31	20−75	5W665P2	20−214
5A14XF5	20−44	5K1	20−71	5W680	20−256
5A15	20−34	5MP2	20−401	5W680J28	20−257
5A16	20−57	5MP4	20−21	5W680P1	20−258
5A17	20−22	5PS1	20−11	5W681	20−261
5A17/105A17	20−23	5PS1F1	20−12	5W681J26	20−262
5A18	20−76	5PS2	20−13	5W681P1	20−263
5A18A1	20−77	5PS2F2	20−14	5W682	20−266
5A18MP1	20−79	5PS3	20−15	5W683	20−271
5A18PS1	20−78	5PS3F1	20−16	5W683P1	20−272

Section IV. Reference Designation Index

REFERENCE DESIGNATION	FIGURE AND INDEX NO.
5W683P2	20−272 20−273
5W684	20−274
5W684P1	20−275
5W684P2	20−275
5W711	20−372
5Z1	20−358
5Z1MP1	20−359
6	2−7 31−
6CB1	31−3
6CP1	2−9
6D	2−7 32−
6D−CB1	32−3
6D−DS1	32−1
6D−DS2	32−1
6D−DS3	32−1
6D−DS4	32−2
6D−H1	32−9
6D−K1	32−12
6D−K2	32−12
6D−L1	32−16
6D−M1	32−4
6D−M2	32−5
6D−M3	32−7
6D−M4	32−6
6D−M5	32−8
6D−MP2	32−14
6D−MP3	32−15
6D−MP4	32−17
6D−MP10	32−13
6D−S2	32−18
6D−S3	32−19
6D−T1	32−10
6D−TB2	32−11
6DS1	31−1
6DS2	31−1
6DS3	31−2
6H1	31−7
6K1	31−9
6L1	31−13
6M1	31−4
6M2	31−5
6M3	31−6
6MP2	31−10
6MP3	31−12
6MP4	31−14
6MP10	31−11
6MP11	31−17
6S2	31−15
6T1	31−8
7	2−11 33−
7A1	33−33
7A2	33−34
7A3	33−39
7A4	33−17
7A5	33−18
7A5A1	33−19
7A5A2	33−22
7A5BT1	33−20
7A5BT2	33−20
7A5K1	33−23
7A5PS1	33−24
7A5T1	33−21
7A6	33−26
7A7	33−25
7A9	33−47
7A9B1	33−48
7A10	33−47
7A10B1	33−48
7A11	33−36
7A11A1	33−37
7A11MP1	33−38
7A12	33−28
7A12K1	33−29
7A12K2	33−29
7A12K3	33−29
7A12T1	33−31
7A12XK1	33−30
7A12XK2	33−30
7A12XK3	33−30
7A14	33−13
7A15	33−13
7A16	33−13
7A17	33−8
7A18	33−11
7A19	33−11
7A20	33−16
7A21	33−12
7A22	33−1
7A23	33−10
7A24	33−33
7A28	33−50
7A28−1	33−50
7A29	33−39
7A30	33−39
7A39	33−47
7A39B1	33−48
7A40	33−47
7A40B1	33−48
7A44	33−13
7A47	33−8
7A48	33−11
7A49	33−11
7A50	33−16
7A51	33−12
7A52	33−1
7A53	33−10
7A68	33−40
7A68A1	33−41
7A68MP1	33−42
7A69	33−43
7A69A1	33−44
7A69MP1	33−45
7AC1	33−4
7AC1MP1	33−6
7AC1MP1−1	33−7
7AC2	33−4
7AC2MP1	33−6
7AC2MP1−1	33−7
7DS1	33−2
7DS2	33−3
7DS3	33−9
7DS4	33−9
7DS5	33−9

Section IV. Reference Designation Index

REFERENCE DESIGNATION	FIGURE AND INDEX NO.
7DS6	33−9
7DS7	33−9
7DS8	33−9
7MP1	2−12 33−57
7MP3	33−49
7MP3−1	33−49
7MS1	2−13
7PS1	33−51
7PS1MP1	33−51
7S1	33−32
7S3	33−14
7S4	33−14
7S5	33−15
7S6	33−46
7S6MP1	33−46
7S7	33−35
7S35	33−15
7S36	33−46
7S37	33−46
7TB1	33−52
7TB2	33−53
7TB8	33−54
7TPS1	33−55
7TPS1CB1	33−56
8	34−1
8A26	34−26
8A29	34−27
8W2	34−8
8W2P1	34−9
8W4	34−11
8W4P1	34−12
8W5	34−14
8W6	34−15
8W6P1	34−16
8W7	34−18
8W7P1	34−19
10	1−3 35−
10A1	35−1 37−1
10A1−1	35−1 36−1
10A1A1	37−3
10A1A1K1−1	36−11
10A1A1K2−1	36−9
10A1A1K3−1	36−9
10A1A1PS1	37−23
10A1A1S1−1	36−8
10A1A1T1−1	36−10
10A1A1T2−1	36−10
10A1A1TB1−1	36−7
10A1A2	37−17
10A1A2−1	36−4
10A1A2CR1	37−18
10A1A2L1	37−19
10A1A2MP1	37−20
10A1A2MP3	37−21
10A1A3	37−22
10A1A3−1	36−6
10A1A4	37−6
10A1A4−1	36−12
10A1A4A1−1	36−16
10A1A4A2−1	36−17
10A1A4A3−1	36−16
10A1A4S1−1	36−13
10A1A5	37−6
10A1A6	37−16
10A1A6−1	36−3
10A1A7	37−4
10A1A8	37−5
10A1A8−1	36−5
10A1A9−1	36−14
10A1F1	37−14
10A1F2	37−14
10A1F3	37−14
10A1F4	37−14
10A1K2	37−11
10A1K2−1	36−29
10A1K3	37−10
10A1K3−1	36−29
10A1K4	37−8
10A1K5	37−9
10A1K6	37−9
10A1K7	36−30 37−9
10A1S1−1	36−2
10A1T1	37−13
10A1T2	37−13
10A1T3	37−12
10A1T4	37−12
10A1TD1	36−28 37−7
10A1W1−1	36−15
10A1XF1	37−15
10A1XF2	37−15
10A1XF3	37−15
10A1XF4	37−15
10A2	35−3
10A3	35−31
10A3B1	35−32
10A4	35−36
10A4B1	35−37
10A4MP1	35−38
10A4MP1−1	35−39
10A5	35−36
10A5B1	35−37
10A5MP1	35−38
10A5MP1−1	35−39
10A6	35−23
10A6A1	35−24
10A6A1A1	35−26
10A6A1A2	35−27
10A6A1E1	35−28
10A6A1E2	35−29
10A6A1MT4	35−30
10A6A2	35−25
10A6A2A1	35−26
10A6A2A2	35−27
10A6A2E1	35−28
10A6A2E2	35−29
10A6A2MT4	35−30
10A7	35−9
10A8	35−22
10A9	35−10
10A11	35−33
10A11B1	35−34

Section IV. Reference Designation Index

REFERENCE DESIGNATION	FIGURE AND INDEX NO.	REFERENCE DESIGNATION	FIGURE AND INDEX NO.	REFERENCE DESIGNATION	FIGURE AND INDEX NO.
10A11B2	35−35	10G1A1S2	37−75	10M1MP11	37−62
10A12	35−9	10G1A3	37−31	10M1MP12	37−64
10A20	35−12	10G1A4	37−32	10M1MP13	37−41
10A20DS1	35−16	10G1A5	37−37	10M1MP14	37−54
10A20DS1−1	35−17	10G1CB1	37−30	10M1MP15	37−63
10A20DS2	35−16	10G1CB2	37−28	10M1MP16	37−58
10A20DS2−1	35−17	10G1K1	37−35	10M1MP17	37−67
10A20DS3	35−16	10G1K1−1	36−27	10M1MP18	37−52
10A20DS3−1	35−17	10G1K2	37−53	10M1MP19	37−57
10A20E1/E2	35−13	10G1MP1	37−34	10M1MP20	37−49
10A20E2	35−18	10G1MP2	37−33	10M1PU1	37−25
10A20E3/E4	35−13	10G1MT1	37−29	10M1S1	37−59
10A20E5/E6	35−13	10G1MT2	37−29	10M1S2	37−39
10A20F1	35−14	10G1MT3	37−29	10M1S3	37−50
10A20F1−1	35−15	10G1S1−1	36−26	10M1S4	37−43
10A20F2	35−14	10G1T1	37−36	10M1S5	37−44
10A20F2−1	35−15	10G1T2	37−36	10M1S6	37−42
10A20F3	35−14	10G1T3	37−36	10M1S7	37−45
10A20F3−1	35−15	10HR1	35−5	10S1	35−2
10A22	35−11	10K1	35−4	10S2	35−8
10DS1	35−19	10M1	37−27	10S3	35−20
10DS2	35−21	10M1−1	36−18	10TPS1	35−6
10DS3	35−21	10M1BT1	37−40	10TPS1F1	35−7
10G1	37−26	10M1BT1−1	36−19	10TPS1F2	35−7
10G1−1	36−25	10M1BT2−1	36−19	10TPS1F3	35−7
10G1A1	37−24	10M1L1	37−38	11	1−5
10G1A1A1	37−79	10M1M1	37−51		38−
10G1A1A2	37−81	10M1MP1	37−68	11A1	38−1
10G1A1DS1	37−77	10M1MP1−1	36−21	11A1A1	38−2
10G1A1DS2	37−76	10M1MP2	37−65	11A2	38−3
10G1A1DS3	37−77	10M1MP2−1	36−22	11A2−1	38−5
10G1A1DS4	37−76	10M1MP3	37−66	11A2A1	38−4
10G1A1F1	37−78	10M1MP3−1	36−24	11A2B1	38−6
10G1A1F2	37−78	10M1MP4	37−60	11A3	38−7
10G1A1F3	37−78	10M1MP4−1	36−20	11A4	38−9
10G1A1M1	37−73	10M1MP5	37−61	11A4−1	38−11
10G1A1M2	37−74	10M1MP5−1	36−23	11A4MP1	38−10
10G1A1M3	37−71	10M1MP6	37−47	11A4MP2	38−12
10G1A1M4	37−70	10M1MP7	37−48	11MP3	1−76
10G1A1M5	37−69	10M1MP8	37−46	11MP4	38−14
10G1A1M6	37−72	10M1MP9	37−55	11MP5	1−77
10G1A1S1	37−80	10M1MP10	37−56	11MP6	1−78

Section IV. Reference Designation Index

REFERENCE DESIGNATION	FIGURE AND INDEX NO.
11MP21	38−15
11MP22	38−16
11S1	38−8
11S2	38−13
12	1−6
	39−
12A1	39−1
12A1DS1	39−11
12A1DS2	39−11
12A1XDS1	39−10
12A2	3−84
	39−24
12MP2	39−15
12MP3	39−16
12MP4	39−17
12MP5	39−18
12MP6	39−20
12MP7	39−23
12MP8	39−13
12MP9	39−14
12MP10	39−21
12MP10MP1	39−22
12MP11	39−19
12MS1	39−4
12MS2	39−5
12MS4	39−6
12MS4−1	39−7
12MS5	39−9
12MS6	39−8
12W1	39−3
13	34−2
	40−
13A1	40−1
13A2	40−6
13A3	40−7
13A4	40−8
13A12	40−11
13B1	40−3
13DS1	40−10
13DS2	40−9
13DS3	40−9
13HR1	40−4
13S1	40−5
13S2	40−5
13S3	40−2
16	20−24
	41−
16A1	41−1
16A2	41−3
16AT1	41−4
16MP1	41−11
16MP2	41−12
16MP3	41−9
16MP4	41−10
16MP5	41−7
16MP6	41−8
16PS1	41−5
16W900	41−6
16W901	41−2
19	34−3
	42−
19A1	42−28
19A1FL1	42−29
19A1FL2	42−30
19A2	42−27
19A3	42−26
19A4	42−25
19A5	42−24
19A6	42−23
19A7	42−2
19A8	42−3
19A9	42−4
19A9F1	42−5
19A9F2	42−6
19A10	42−7
19A11	42−8
19A11A1	42−9
19A12	42−22
19A13	42−10
19A14	42−11
19A15	42−12
19A15F1	42−13
19A15F2	42−14
19A16	42−15
19A17	42−16
19A19	42−21
19A38MP1	42−18
19A38PS1	42−19
19A38PS2	42−20
19W1	34−5
19W1P1	34−6
19W1P2	34−7
20	34−24
20A1	34−25
20A2	34−25
21A9	43−
21A9A1	43−1
21A9A1MS3	43−4
21A9A2	43−5
21A9A3	43−6
21A9A3D1	43−7
21A9A3MP1	43−6
21A9A3MP2	43−6
21A9A4	43−8
21A9DS1	43−14
21A9MS1	43−11
21A9PS1	43−9
21A9PS1F2	43−10
21A9W3	43−12
21A12	43−
21A12A1	43−1
21A12A2	43−5
21A12A3	43−6
21A12A4	43−8
21A12DS1	43−14
21A12PS1	43−9
21A12PS1F2	43−10
21A12W3	43−12
21MP8	17−23
	20−82
31	2−299
31A1	2−301
31A2	2−301
31K1	2−300
32	63−4
	68−
32A9	68−3
32A10	68−2
32A11	68−5

Section IV. Reference Designation Index

REFERENCE DESIGNATION	FIGURE AND INDEX NO.
32A12	68−7
32A13	68−4
32CP1	68−6
32E1	68−1
32J1	68−9
32W900	68−15
32W905	68−12
32W906	68−13
34	63−5
	68−
34A9	68−3
34A10	68−2
34A11	68−5
34A12	68−7
34A13	68−4
34CP1	68−6
34E1	68−1
34J1	68−9
34W900	68−10
34W901	68−11
34W902	68−14
39	34−28
	44−
39A1	44−30
39A1FL1	44−31
39A1FL2	44−32
39A2	44−29
39A3	44−28
39A4	44−27
39A5	44−26
39A6	44−25
39A7	44−2
39A8	44−3
39A9	44−4
39A9F1	44−5
39A9F2	44−6
39A10	44−7
39A11	44−8
39A11A1	44−9
39A12	44−24
39A13	44−10
39A14	44−11
39A15	44−12

REFERENCE DESIGNATION	FIGURE AND INDEX NO.
39A15F1	44−13
39A15F2	44−14
39A16	44−15
39A17	44−16
39A18	44−23
39A18M1	44−21
39A19	44−22
39A38MP1	44−18
39A38PS1	44−19
39A38PS2	44−20
39W1	34−35
40	34−29
40A1	34−30
41	45−1
	46−
41A1	46−2
41A1A1	46−6
41A1A2	46−7
41A1A3	46−3
41A1B1	46−11
41A1W1	46−4
41A1W2	46−5
41A2	46−9
41A2A1	46−12
41A2A2	46−12
41A2A3	46−12
41A2A4	46−13
41A2A5	46−13
41A2PS1	46−10
41A3	46−17
41A4	46−24
41A5	46−39
41A6	46−14
41A7	46−15
	47−
41A7A1	47−1
41A7A2	47−2
41A7A2W1	47−3
41A7A3	47−2
41A7A4	47−7
41A7B1	47−8
41A7B2	47−8
41A7PS1	47−9

REFERENCE DESIGNATION	FIGURE AND INDEX NO.
41A8	46−31
41A8A1	46−32
41A8A1A1	46−33
41A8A1B1	46−34
41A8A1B2	46−34
41A8A1B3	46−34
41A8A1B4	46−34
41A11	46−8
41A13	46−18
	48−
41A13A1	48−1
41A13A2	48−2
41A13A3	48−2
41A13A4	48−3
41A13A5	48−3
41A13A6	48−4
41A13A7	48−2
41A13A8	48−2
41A13A9	48−2
41A13A10	48−2
41A13A11	48−5
41A13A12	48−6
41A13A13	48−7
41A13A14	48−8
41A13A15	48−9
41A13A16	48−38
41A13B1	48−11
41A13B2	48−11
41A13B3	48−11
41A13B4	48−12
41A13B5	48−12
41A13B6	48−12
41A13CB1	48−10
41A13LF1	48−36
41A13PS1	48−13
41A13PS2	48−14
41A13S1	48−15
41A13W1	48−23
41A13W2	48−26
41A13W3	48−27
41A13W4	48−20
41A13W5	48−21

Section IV. Reference Designation Index

REFERENCE DESIGNATION	FIGURE AND INDEX NO.
41A13W6	48−22
41A13W7	48−16
41A13W8	48−28
41A13W9	48−18
41A13W10	48−24
41A13W11	48−29
41A13W12	48−30
41A13W13	48−35
41A13W22	48−33
41A13W23	48−31
41A13W24	48−32
41A13W25	48−34
41A13W26	48−19
41A13W27	48−25
41A15	43− 46−29
41A15A1	43−1
41A15A1MS3	43−4
41A15A2	43−5
41A15A3	43−6
41A15A3D1	43−7
41A15A4	43−8
41A15DS1	43−14
41A15MP21	43−18
41A15PS1	43−9
41A15PS1F2	43−10
41A15W3	43−12
41A16	46−30 49−
41A16A3	49−1
41A16A4	49−2
41A16A5	49−3
41A16A6	49−4
41A16A13	49−6
41A16A14A1	49−7
41A16A15	49−8
41A16A16	49−6
41A16A17	49−5
41A16A18	49−6
41A16A19	49−9
41A16A20	49−10
41A16A21	49−11
41A16AT1	49−12
41A16AT2	49−16
41A16AT3	49−13
41A16AT4	49−13
41A16AT5	49−14
41A16AT6	49−15
41A16AT7	49−13
41A16AT8	49−13
41A16AT9	49−13
41A16AT10	49−13
41A18	46−35
41A18B1	46−37
41A18B2	46−37
41A18W1	46−36
41A20	46−40
41A20CB1/CB2	46−41
41A20CB3	46−42
41A20F1	46−43
41A20F2	46−43
41A20F3	46−43
41A20F4	46−43
41A20F5	46−43
41A20J1	46−48
41A20J2	46−48
41A20J3	46−48
41A20J4	46−49
41A20J5	46−49
41A20J6	46−47 46−49
41A20LF1	46−45
41A20XF1	46−44
41A20XF2	46−44
41A20XF3	46−44
41A20XF4	46−44
41A20XF5	46−44
41A21	46−50
41A25	46−16
41A27	46−25
41A27A1	46−26
41A27A2	46−26
41A27A3	46−26
41A28	46−27
41A28PS1	46−27
41B1	46−20
41FL1	46−22
41FL1MS1	46−23
41J19	46−52
41J20	46−53
41MP4	46−192
41MS3	46−54
41PS1	21− 46−38
41PS1A1	21−1
41PS1A1BT1	21−2
41PS1A1CB4	21−3
41PS1A1CB5	21−3
41PS1A1CB6	21−4
41PS1A1CB7	21−4
41PS1A2	21−5
41PS1A3	21−6
41PS1A4	21−7
41PS1A4B1	21−8
41PS1A4B2	21−8
41PS3	46−1
41TB2	46−21
41TB3	46−21
41W1	46−75
41W1J15	46−77
41W1P1	46−76
41W2	46−78
41W2J16	46−80
41W2P1	46−79
41W3	46−81
41W3J17	46−83
41W3P1	46−82
41W4	46−84
41W4J4	46−86
41W4P1	46−85
41W5	46−87
41W5J5	46−89
41W5P1	46−88
41W6	46−90
41W6P1	46−91
41W6P2	46−92
41W7	46−93

Section IV. Reference Designation Index

REFERENCE DESIGNATION	FIGURE AND INDEX NO.
41W7P1	46−94
41W7P2	46−95
41W8	46−96
41W8P1	46−97
41W8P2	46−98
41W9	46−99
41W9P1	46−100
41W9P2	46−101
41W10	46−102
41W10P1	46−103 46−171
41W10P2	46−104 46−172
41W11	46−107
41W11P1	46−108
41W11P2	46−109
41W12	46−112
41W12P1	46−113
41W12P2	46−114
41W15	46−116
41W15P1	46−117
41W15P2	46−118
41W26	46−121
41W26P1	46−122
41W26P2	46−122
41W29	46−124 46−128 46−132
41W29P1	46−125 46−129 46−133
41W29P2	46−126 46−130 46−133
41W31	46−190
41W34	46−134
41W34J18	46−137
41W34P1	46−135
41W35	46−139
41W36	46−140
41W37	46−143
41W38	46−146
41W39	46−149
41W61	46−152
41W61P1	46−153

REFERENCE DESIGNATION	FIGURE AND INDEX NO.
41W61P2	46−155
41W62	46−157
41W62P1	46−158
41W62P2	46−160
41W64	46−162
41W64J14	46−164
41W64P1	46−163
41W65	46−166
41W65P1	46−167
41W65P2	46−168
41W66	46−170
41W74	46−175
41W75	46−176
41W98	46−177
41W99	46−177
41W100	46−177
41W101	48−17
41W107	46−178
41W108	46−178
41W109	46−178
41W110	46−178
41W111	46−178
41W112	46−178
41W113	46−178
41W114	46−178
41W115	46−178
41W121	46−179
41W122	46−180
41W126	46−181
41W126P1	46−182
41W126P2	46−182
41W145	46−72
41W145P1	46−73
41Z1	46−187
41Z1MP1	46−188
42A1	45−3
42A2	45−5
43A1	50−1
43A1W1	50−6
43A2	50−4
43MP1	50−5
44	50−7

REFERENCE DESIGNATION	FIGURE AND INDEX NO.
44A1	50−8
44MP2	50−36
44PS1	50−9
45	50−10
45A1	50−12 50−19 50−25
45A1A1	50−14 50−20 50−26
45A1A2	50−16 50−22 50−27
45A1MP1	50−15 50−21
45A1S1	50−17 50−23 50−28
45A1S2	50−18 50−24
45A1S3	50−23 50−28
45A2	50−12 50−19 50−25
45A2A1	50−14 50−20 50−26
45A2A2	50−16 50−22 50−27
45A2MP1	50−15 50−21
45A2S3	50−17
45A2S4	50−18 50−24
45A3	50−44
45A4	50−44
45A5	50−44
45MP200	50−43
45MS3	50−30
45MS4	50−31
45P1	50−11
45P2	50−29
45S6	50−45
46	50−32
47	45−8
47−K1	45−9
48	50−33

Section IV. Reference Designation Index

REFERENCE DESIGNATION	FIGURE AND INDEX NO.	REFERENCE DESIGNATION	FIGURE AND INDEX NO.	REFERENCE DESIGNATION	FIGURE AND INDEX NO.
50	45−10	60A4MP2	52−22	60DS5	51−20
51	50−33	60A4MP3	52−20	60DS5A1	51−21
60	1−4	60A4MP4	52−5	60DS5A2	51−22
	51−	60A4MP5	52−17	60DS6	51−20
60A2	51−	60A4S1	52−19	60DS6A1	51−21
60A2A1	51−68	60A5	51−10	60DS6A2	51−22
60A2A2	51−69	60A5CB1	51−11	60DS7	51−20
60A2A3	51−62	60A5CB2	51−12	60DS7A1	51−21
60A2A3A1	51−63	60A5CB3/CB5	51−14	60DS7A2	51−22
60A2A5	51−64	60A5CB4	51−12	60DS8	51−20
60A2A5A1	51−65	60A5CB5−1	51−13	60DS8A1	51−21
60A2A5A2	51−1	60A5CB6	51−16	60DS8A2	51−22
60A2A5A2A1	51−2	60A5CB7	51−12	60DS9	51−20
60A2A6	51−66	60A5CB8	51−17	60DS9A1	51−21
60A2A6A1	51−67	60A5CB8/CB10	51−18	60DS9A2	51−22
60A2A7	51−2	60A5CB10/CB12	51−15	60DS10	51−20
60A2A7A1	51−3	60A5CB11	51−12	60DS10A1	51−21
60A2A7A2A1S1	51−6	60A6	51−25	60DS10A2	51−22
60A2A7MP1	51−4	60A6A1	51−26	60DS11	51−24
60A2A7MP2	51−5	60A6A2	51−26	60MP2	51−44
60A2A8	51−53	60A6A3	51−26	60MP3	51−43
60A3A1	51−54	60A7	51−27	60MP4	51−42
60A3A2	51−7	60A8	51−28	60MP5	51−40
60A4	51−8	60A9	51−59	60MP6	51−41
	52−	60A9MP1	51−60	60MP9	51−45
60A4A1	52−1	60A9MP2	51−61	61A5S1	51−29
60A4A2	52−2	60A10	51−46	61A5S1F1	51−30
60A4A3	52−3	60A10A1	51−47	61A5S1F2	51−30
60A4A4	52−4	60A11	51−48	61A5S1F3	51−30
60A4A7	52−6	60A11MP1	51−51	61A5S2	51−31
60A4A8	52−7	60A12	51−49	61A5S2F1	51−32
60A4A9	52−8	60A12MP1	51−51	61A5S2F2	51−32
60A4A10A1	52−9	60A13	51−70	61A5S2F3	51−32
60A4A10A2	52−10	60A13CB1	51−71	61A5S3	51−35
60A4A11	52−11	60A14	51−52	61A5S3F1	51−36
60A4A11A1	52−12	60A15	51−50	61A5S3F2	51−36
60A4A12	52−13	60DS1	51−23	61A5S3F3	51−36
60A4A13	52−14	60DS2	51−23	61A105S2	51−33
60A4A14	52−15	60DS3	51−23	61A105S2F1	51−34
60A4A14A1	52−16	60DS4	51−20	61A105S2F2	51−34
60A4A15	51−9	60DS4A1	51−21	61A105S2F3	51−34
60A4K1	52−18	60DS4A2	51−22		
60A4MP1	52−21				

Section IV. Reference Designation Index

REFERENCE DESIGNATION	FIGURE AND INDEX NO.
62	51−55
	53−
62A1	54−39
	55−
62A1C1	55−1
62A1C2	55−1
62A1C3	55−1
62A1C4	55−1
62A1C5	55−1
62A1C6	55−1
62A1C7	55−1
62A1C8	55−1
62A1C9	55−1
62A1C10	55−1
62A1C11	55−1
62A1C12	55−1
62A1F1	54−38
62A1F16	55−2
62A1F17	55−2
62A1F18	55−2
62A1R1	55−3
62A1R2	55−3
62A1R3	55−3
62A1R4	55−3
62A1R5	55−3
62A1R6	55−3
62A1W1	55−4
62A2F1	54−14
62A2F2	54−14
62A2F3	54−14
62A2F4	54−14
62A2F5	54−14
62A2F6	54−14
62A2F7	54−14
62A2F8	54−14
62A2F9	54−14
62A2F10	54−14
62A2F13	54−15
62A2F14	54−15
62A2F15	54−15
62A3	54−16
	59−
62A3A1	59−1
62A3A1MP1	59−2
62A3C61	59−3
62A3C62	59−3
62A3C63	59−3
62A3C64	59−4
62A3C65	59−4
62A3C66	59−4
62A3E1	59−5
62A3PB61	59−6
62A3PB62	59−6
62A3PB63	59−6
62A3R61	59−7
62A3R61MP1	59−8
62A3R62	59−7
62A3R62MP1	59−8
62A3R63	59−7
62A3R63MP1	59−8
62A4	54−17
62A4A1	54−18
62A4A1MP1	54−19
62A4A2	54−20
62A4A2MP1	54−21
62A5	53−5
	60−
62A5A1	60−1
62A5A1MP1	60−2
62A5A2	60−3
62A5A2DS1	60−4
62A5A3	60−5
62A5S2	60−6
62A5S2MP1	60−7
62A6	54−24
62A6C3A	54−25
62A6C3B	54−25
62A6C3C	54−25
62A6CB1	54−26
62A6K2A	54−27
62A6K3A	54−27
62A6S1	54−28
62A6S3	54−29
62A6S4	54−30
62A6S5	54−31
62A7	54−32
62A7B1	54−33
62A7B2	54−33
62A7B3	54−33
62A7B4	54−33
62A7MP1	54−34
62A8	54−23
	57−
62A8A1	57−1
62A8A1C41	57−3
62A8A1F41	57−4
62A8A1F42	57−4
62A8A1MP1	57−2
62A8A1Q41/Q42	57−5
62A8A2	57−6
62A8A2C42	57−8
62A8A2F43	57−9
62A8A2F44	57−9
62A8A2MP1	57−7
62A8A2Q43/Q44	57−10
62A8A3	57−11
62A8A3C43	57−13
62A8A3F45	57−14
62A8A3F46	57−14
62A8A3MP1	57−12
62A8A3Q45/Q46	57−15
62A9	54−22
	58−
62A9C21	58−1
62A9C22	58−1
62A9C23	58−1
62A9C24	58−1
62A9C25	58−1
62A9C26	58−1
62A9PB21	58−2
62A9PB21MP1	58−3
62A9PB22	58−2
62A9PB22MP1	58−3
62A9PB23	58−2
62A9PB23MP1	58−3
62A9R21	58−4
62A9R21MP1	58−5
62A9R22	58−4

Section IV. Reference Designation Index

REFERENCE DESIGNATION	FIGURE AND INDEX NO.
62A9R22MP1	58−5
62A9R23	58−4
62A9R23MP1	58−5
62A9R24	58−4
62A9R24MP1	58−5
62A9R25	58−4
62A9R25MP1	58−5
62A9R26	58−4
62A9R26MP1	58−5
62A11A1F1	54−35
62C2	54−36
62C5	54−1
62CT1	54−37
62CT2	54−37
62CT3	54−37
62CT4	55−5
62DCCT1	54−2
62DCCT2	54−2
62E6MP1	54−4
62E7MP1	54−4
62E8MP1	54−4
62F20	54−42
62F61	54−3
62F62	54−3
62F63	54−3
62K	54−5
62K2	54−8
62K2CR1	54−9
62K3	54−6
62K3CR1	54−7
62K4	54−10
62MP1	53−1
62MP2	53−2
62MP3	53−3
62MP4	54−11
62MP5	53−4
62PS1	54−12
62PS1CPT1	54−13
62PS2	54−12
62PS2CPT2	54−13
62PS3	54−12
62PS3CPT3	54−13
62W3F1	54−40
62W3XF1	54−41
62XF20	54−43
63	51−56
	61−
63A2BT1	61−1
63A2BT2	61−1
63A2BT3	61−1
63A2BT4	61−1
63A2BT5	61−1
63A2BT6	61−1
63A2BT7	61−1
63A2BT8	61−1
63A2BT9	61−1
63A2BT10	61−1
63A2BT11	61−1
63A2BT12	61−1
63A2BT13	61−1
63A2BT14	61−1
63A2BT15	61−1
63A2BT16	61−1
63A2BT17	61−1
63A2BT18	61−1
63A2BT19	61−1
63A2BT20	61−1
63A2BT21	61−1
63A2BT22	61−1
63A2BT23	61−1
63A2BT24	61−1
63A2BT25	61−1
63A2BT26	61−1
63A2BT27	61−1
63A2BT28	61−1
63A2BT29	61−1
63A2BT30	61−1
63A2BT31	61−1
63A2BT32	61−1
63A2BT33	61−1
63A2BT34	61−1
63A2BT35	61−1
63A2BT36	61−1
63A2BT37	61−1
63A2BT38	61−1
63A2BT39	61−1
63A2BT40	61−1
63A2MP1	61−2
63A2W1	61−3
63CB1	61−6
63MP1	61−4
63MP2	61−5
64	51−58
	56−
64A1F1	56−5
64A1F2	56−6
64CB1	56−9
64CB2	56−7
64CB3	56−8
64MP1	56−1
64MP2	56−2
64MP3	56−3
64MP4	56−4
64MP5	56−10
64MP6	56−11
64MP7	56−12
65	51−57
	62−
65R1	62−1
6D−MP11	32−20
70/170	2−294
	63−1
70/170A1	64−6
	65−
70/170A1A1	65−1
70/170A1A1A2	65−2
70/170A1A1A3	65−3
70/170A1A1A4	65−4
70/170A2	64−10
70/170A2−1	64−10
70/170A2CP1	64−11
70/170A3	64−12
70/170A4	64−14
70/170A5	64−18
70/170A6	64−19
70/170A7	64−21
	66−
70/170A7A1	66−1

Section IV. Reference Designation Index

REFERENCE DESIGNATION	FIGURE AND INDEX NO.
70/170A7A1A2	66−3
70/170A7A1A3	66−2
70/170A7A1A4	66−4
70/170A8	64−26
70/170A10	64−28
70/170A11	64−29
70/170A11A1BT1	64−30
70/170A12−301	64−38
70/170A12−307	64−38
70/170A13	64−39
70/170A13CP1	64−40
70/170A13W1	64−41
70/170A14	64−42
70/170A14A1	64−46
70/170A14A2	64−46
70/170A14A3	64−46
70/170A14A4	64−46
70/170A14A5	64−47
70/170A14A6	64−48
70/170A14A7	64−48
70/170A14A8	64−48
70/170A14A9	64−48
70/170A14A10	64−48
70/170A14A11	64−48
70/170A14A12	64−48
70/170A14A13	64−48
70/170A14A14	64−48
70/170A14A15	64−48
70/170A14A16	64−48
70/170A14A17	64−48
70/170A14A18	64−48
70/170A14A19	64−48
70/170A14A20	64−48
70/170A14A21	64−49
70/170A14A21−1	64−50
70/170A14A30	64−43
70/170A14B1	64−45
70/170A14PS1	64−44
70/170A14PS2	64−44
70/170A15	64−51
70/170A16	64−51
70/170A17	64−51
70/170A18	64−34
70/170A18A1	64−35
70/170A18MP1	64−37
70/170A18PS1	64−36
70/170A19	64−52
70/170A20	64−54
70/170A22	64−31
70/170A23	64−58
70/170A24	64−59
70/170A25	64−60
70/170A26	64−61
70/170A27	64−61
70/170A28	64−57
70/170A29	64−57
70/170B1	64−3
70/170B2	64−3
70/170CP1	64−72
70/170CP2	64−72
70/170CP3	64−72
70/170CP4	64−72
70/170CP5	64−72
70/170CP6	64−72
70/170CP7	64−72
70/170CP8	64−72
70/170CP9	64−72
70/170CP10	64−72
70/170CP11	64−72
70/170CP12	64−72
70/170CP13	64−25
70/170CP14	64−124
70/170E1	64−125
70/170E1−1	63−7
70/170FL1	64−62
70/170J7	64−74
70/170J8	64−75
70/170J15	64−76
70/170J17	64−77
70/170J19	64−73
70/170J23	64−68
70/170MP1	64−1
70/170MP2	64−33
70/170MP3	64−71
70/170MP4	64−69
70/170MP11	64−2 64−64
70/170MP13	64−4
70/170MP18	64−7 64−15 64−22
70/170MP24	64−53
70/170MP34	64−55
70/170MP40	64−32
70/170MP43	64−63
70/170MP99	64−70
70/170MP500	64−8 64−16 64−23 64−27
70/170MP505	64−20
70/170MP507	64−24
70/170MP508	64−9 64−17
70/170MP513	64−13
70/170PS1	64−65
70/170TB2	64−67
70/170W8	64−78
70/170W19	64−79
70/170W20	64−80
70/170W21	64−81
70/170W22	64−82
70/170W31	64−5
70/170W32	64−83
70/170W33	64−84
70/170W50	64−85
70/170W51	64−85
70/170W52	64−85
70/170W53	64−85
70/170W54	64−85
70/170W55	64−85
70/170W56	64−85
70/170W57	64−85
70/170W58	64−86
70/170W60	64−90
70/170W61	64−87
70/170W62	64−90
70/170W63	64−87
70/170W64	64−90

Section IV. Reference Designation Index

REFERENCE DESIGNATION	FIGURE AND INDEX NO.	REFERENCE DESIGNATION	FIGURE AND INDEX NO.	REFERENCE DESIGNATION	FIGURE AND INDEX NO.
70/170W65	64−87	70/170W125	64−97	70/170W266	64−114
70/170W66	64−90	70/170W149	64−98	70/170W267	64−114
70/170W67	64−87		64−99	70/170W268	64−114
70/170W68	64−90	70/170W150	64−100	70/170W269	64−114
70/170W69	64−87	70/170W151	64−101	70/170W270	64−114
70/170W70	64−90	70/170W200	64−102	70/170W274	64−116
70/170W72	64−90	70/170W200A	64−103	70/170W275	64−115
70/170W73	64−87	70/170W201	64−104	70/170W276	64−114
70/170W74	64−90	70/170W202	64−102	70/170W277	64−114
70/170W75	64−87	70/170W203	64−104	70/170W278	64−114
70/170W76	64−88	70/170W204	64−102	70/170W279	64−114
70/170W77	64−89	70/170W206	64−104	70/170W280	64−114
70/170W78	64−91	70/170W207	64−105	70/170W281	64−114
70/170W79	64−92	70/170W208	64−104	70/170W282	64−114
70/170W80	64−93	70/170W209	64−104	70/170W283	64−114
70/170W81	64−94	70/170W210	64−105	70/170W284	64−114
70/170W83	64−95	70/170W211	64−105	70/170W285	64−114
70/170W86	64−96	70/170W212	64−102	70/170W286	64−114
70/170W101	64−97	70/170W213	64−102	70/170W291	64−113
70/170W102	64−97	70/170W214	64−102	70/170W292	64−113
70/170W103	64−97	70/170W215	64−102	70/170W293	64−113
70/170W104	64−97	70/170W216	64−102	70/170W294	64−113
70/170W105	64−97	70/170W217	64−104	70/170W295	64−113
70/170W106	64−97	70/170W218	64−104	70/170W296	64−113
70/170W107	64−97	70/170W219	64−104	70/170W297	64−113
70/170W108	64−97	70/170W233	64−105	70/170W301	64−117
70/170W109	64−97	70/170W234	64−106	70/170W302	64−118
70/170W110	64−97	70/170W235	64−102	70/170W303	64−119
70/170W111	64−97	70/170W250	64−106	70/170W303A	64−120
70/170W112	64−97	70/170W251	64−104	70/170W304	64−121
70/170W113	64−97	70/170W252	64−105	70/170W304A	64−120
70/170W114	64−97	70/170W253	64−104	70/170W311	64−122
70/170W115	64−97	70/170W254	64−107	70/170W900	64−123
70/170W116	64−97	70/170W255	64−108	71	63−2
70/170W117	64−97	70/170W256	64−104		67−1
70/170W118	64−97	70/170W257	64−109	71A1	67−2
70/170W119	64−97	70/170W258	64−110		69−
70/170W120	64−97	70/170W259	64−111	71A1A1	69−1
70/170W121	64−97	70/170W260	64−112	71A1A1A2	69−2
70/170W122	64−97	70/170W263	64−105	71A1A1A3	69−3
70/170W123	64−97	70/170W264	64−105	71A1A1A4	69−4
70/170W124	64−97	70/170W265	64−113	71A2	67−4
				71A3	67−7

Section IV. Reference Designation Index

REFERENCE DESIGNATION	FIGURE AND INDEX NO.
71A4	67−8
71A5	67−9
71A6	67−10
71A7	67−16
71A9	67−13
71A44	67−14
71E1	67−11
71MP1	67−15
71MP1A1	67−12
71MP1MP2	67−6
71MP10	67−3
71MP11	67−6
71W187	67−17
71W188	67−18
71W189	67−19
71W190	67−20
71W211	67−21
71W214	67−5
71W902	67−34
71W902A	67−35
72	63−6 70−1
72A1	70−2
72A1A1	65−1
72A1A1A2	65−2
72A1A1A3	65−3
72A1A1A4	65−4
72A2	70−3
72A3	70−4
72A4	70−5
72E1	70−6
72MP1	70−7
72MP10	70−8
72W191	70−9
72W192	70−10
73	70−11
74	70−12
79	63−3 67−22
79A1	67−23
79A1MP2	67−24
79A1MP3	67−25
79A1MP4	67−26
79A1MP5	67−27
79A1MP6	67−28
79A1MP7	67−29
79A1MP8	67−30
79A1MP9	67−31
79A1MP10	67−32
79MP1	67−33
103	2−2 13−
104	2−4 17−
105	2−6 20−
105A1	22−
105A2	23−
105A3	20−2 24−
105A5	20−30 25−
105A8	20−31
105A8B1	20−33
105A8B2	20−33
105A9	20−7
105A10	20−8
105A11	20−9
105A11B1	20−10
105A11B2	20−10
105A12	20−35
105A13	20−36
105A13A1	20−37
105A13A1A1	20−38
105A13A1B1	20−39
105A13A1B2	20−39
105A13A1B3	20−39
105A13A1B4	20−39
105A14	20−40
105A14CB1/2	20−41
105A14CB3	20−42
105A14F1	20−43
105A14F2	20−43
105A14F3	20−43
105A14F4	20−43
105A14F5	20−43
105A14J4	20−48
105A14J5	20−48
105A14J6	20−46
105A14LF1	20−49
105A14XF1	20−44
105A14XF2	20−44
105A14XF3	20−44
105A14XF4	20−44
105A14XF5	20−44
105A20	20−69
105A20A1	20−69
105A20A2	20−69
105A21	20−70
105A25	20−50
105A25J1	20−51
105B1	20−17
105B2	20−17
105B3	20−17
105B4	20−17
105PS1	20−11
105PS1F1	20−12
105PS2	20−13
105PS2F2	20−14
105PS3	20−15
105PS3F1	20−16
105PS4	20−5
105PS4F1	20−6
105W685	20−278
105W685P1	20−279
105W685P2	20−279
105W686	20−281
105W686P1	20−282
105W686P2	20−282
105W687	20−284
105W687J26	20−285
105W688	20−289
105W688J27	20−290
105W688P1	20−291
105W689	20−294
105W689P1	20−295
105W689P2	20−295
105W690	20−297
105W690J11	20−298

Section IV. Reference Designation Index

REFERENCE DESIGNATION	FIGURE AND INDEX NO.
105W690P1	20−299
106	2−8
106CP2	2−10
106D	2−8
CP1	68−8
J1	50−34
J2	50−35
N100F1	2−295
N100F3	2−296
TPMS31	51−19
W3	1−26
W3P1	1−27
W3P2	1−28
W4	1−31
W4P1	1−32
W4P2	1−33
W5/105	2−73
W5/105P1	2−74
W7/107	2−76
W7/107P1	2−77
W8/108	2−80
W8/108P1	2−81
W9/109	63−29
W9/109−303	2−83 63−31
W9/109P1	2−84
W10	1−35
W10P1	1−36
W10P2	1−37
W11	2−85
W11P1	2−86
W11P2	2−87
W12/112	2−89
W12/112P1	2−90
W13	2−93
W13P1	2−94
W15/115	2−98
W15/115P1	2−99
W15/115P2	2−100
W17/117	2−103
W17/117P1	2−104
W17/117P2	2−105
W19	2−107
W19/119	2−107
W19/119P1	2−108
W19/119P2	2−109
W20	2−112
W20/120P1	2−113
W20/120P2	2−113
W21	2−116
W21/121	2−116
W21/121P1	2−117
W21/121P2	2−117
W22/122	2−119
W22/122P1	2−120
W22/122P2	2−120
W23/123	2−122
W23/123P1	2−123
W23/123P2	2−124
W24/124	2−126
W24/124P1	2−127
W24/124P2	2−128
W25/125	2−130
W25/125P1	2−131
W25/125P2	2−131
W26/126	2−134
W26/126P1	2−135
W26/126P2	2−136
W30	2−138
W30P1	2−139
W30P2	2−139
W31	1−40
W31P1	1−41
W31P2	1−41
W32	2−142
W32/132	2−142
W35	2−144
W36	63−108
W36−1	63−109
W36/136−301	2−146
W36A	63−113
W36A−1	63−114
W37	2−147
W37P1	2−148
W40	2−152
W40P1	2−153
W40P2	2−154
W42	34−32
W42P1	34−34
W42P2	34−33
W43	34−36
W44	2−158 63−21
W44−304	2−157 63−18
W44P1	2−159
W44P2	2−160
W45	2−163 63−19
W45−308	2−164 63−22
W45P1	2−165
W45P2	2−166
W46	2−168 63−20
W46−309	2−169 63−23
W48	34−37
W49	34−38
W53	1−45 2−170
W53P1	1−46 2−171
W53P2	1−46 2−171
W54	1−47 2−172
W54P1	1−48 2−173
W54P2	1−48 2−173
W55	1−49 2−174
W55P1	1−50 2−175
W55P2	1−50 2−175 2−176
W56	1−51 2−177
W56P1	1−52 2−178

Section IV. Reference Designation Index

REFERENCE DESIGNATION	FIGURE AND INDEX NO.
W56P2	1−52 2−178 2−179 2−180
W57	2−182
W57/157	2−181
W58/158	2−183
W59/159	2−184
W59/159P1	2−185
W59/159P2	2−185
W60/160	2−186
W60/160P1	2−187
W60/160P2	2−187
W61	2−188
W61/161	2−188
W61/161P1	2−189
W61/161P2	2−189
W62	2−190
W62P1	2−191
W62P2	2−192
W62P3	2−191
W63	2−196
W63P1	2−197
W64	2−200
W64P1	2−201
W65/165	2−202
W65/165P1	2−203
W74	2−206
W74/174	2−206
W74/174P1	2−207
W74/174P2	2−207
W75/175	2−208
W75/175P1	2−209
W75/175P2	2−210
W76/176	2−211
W76/176P1	2−212
W76/176P2	2−212
W88	2−213
W90	34−22
W91	34−23
W95/195	2−216 63−78
W95/195−302	2−217 63−79
W96	34−39
W97	34−40
W100	2−218
W100P1	2−219
W100P2	2−219
W110	1−53
W110P1	1−54
W110P2	1−55
W111	63−52
W112−308	63−45
W112−309	63−53
W113	63−59
W114	63−60
W129	63−71
W130	2−221
W130P1	2−222
W130P2	2−222
W131	1−57
W131P1	1−58
W131P2	1−58
W132	2−142
W136	63−111
W136A−1	63−112
W136A−2	63−110
W142	63−54
W152	63−55
W155	1−63 2−225
W155P1	1−64 2−226
W155P2	1−64 2−226
W156	1−65 2−227
W156P1	1−66 2−228
W156P2	1−66 2−228
W162−1	2−230 63−86
W162−301	2−229 63−80
W163−1	2−232 63−87
W163−302	2−231 63−81
W164−303	2−233 63−82
W166−1	2−235 63−95
W166−301	2−234 63−93
W166C	63−98
W167−302	63−115
W168−1	2−237 63−101
W168−301	2−236 63−99
W169−1	2−239 63−88
W169−304	2−238 63−83
W169A	63−90
W170−1	2−241 63−89
W170−305	2−240 63−84
W170A	63−91
W171−306	2−242 63−85
W171A	63−92
W173−1	2−244 63−96
W173−302	2−243 63−94
W173A	63−97
W177	63−116
W177A	63−118
W178−1	2−246 63−102
W178−302	2−245 63−100
W179	63−119
W180	63−120
W181	2−247
W181P1	2−248
W181P2	2−249
W182	2−252
W182P1	2−253
W182P2	2−253
W183	2−256

Section IV. Reference Designation Index

REFERENCE DESIGNATION	FIGURE AND INDEX NO.
W183P1	2−257
W183P2	2−257
W184	2−260
W184P1	2−261
W184P2	2−261
W185	2−264
W185P1	2−265
W185P2	2−265
W193	63−43
W194	63−44
W200	63−30 63−72
W201	63−15
W201−2	63−27
W201−3	63−24
W202	63−16
W202−2	63−28
W202−3	63−25
W215	45−15
W215P1	45−16
W215P2	45−17
W216	63−35
W216−1	63−33
W216−301	63−34
W216−303	63−36
W218	63−32
W220−301	63−8
W221	63−9 63−105
W226	63−117
W227−301	63−10
W227MP1	3−72
W228−301	63−11
W230	63−17
W230−2	63−26
W250	34−41 34−45 63−103
W250P1	34−46
W250P2	34−47
W251	34−49 63−104
W251P1	34−50 34−53
W251P2	34−51 34−54
W253	34−59 63−121
W253P1	34−60
W253P2	34−60
W271	63−46
W271−309	63−56
W271−310	63−41 63−63
W271−311	63−66
W272	63−47
W273	63−48
W274	63−49
W281−302	63−107
W301	45−18 45−20
W301P1	45−19 45−21
W301P2	45−19 45−21
W302	45−22 45−24
W302P1	45−23 45−25
W302P2	45−23 45−25
W303	45−26 45−28
W303P1	45−27 45−29
W303P2	45−27 45−29
W304	45−30 45−32
W304P1	45−31 45−33
W304P2	45−31 45−33
W305	45−34 45−36
W305P1	45−35 45−37
W305P2	45−35 45−37
W306	45−38 45−40
W306P1	45−39 45−41
W306P2	45−39 45−41
W307	45−42 45−45
W307P1	45−43 45−46
W307P2	45−44 45−46
W309	45−47 45−50
W309P1	45−48 45−51
W309P2	45−49 45−51
W310	45−52
W310P1	45−53
W310P2	45−54
W313	45−55
W313P1	45−56
W313P2	45−57
W315	45−58
W315P1	45−59
W315P2	45−60
W316	45−61
W316P1	45−62
W316P2	45−62
W323	45−63
W323P1	45−64
W323P2	45−65
W324	45−66
W324P1	45−67
W324P2	45−68
W326	45−69
W326P1	45−70
W328	45−73 63−12
W328−1	63−13
W328−2	63−14
W328P1	45−74
W328P2	45−74
W330	45−75
W330P1	45−76
W330P2	45−76
W331−304	63−37
W331−305	63−61

Section IV. Reference Designation Index

REFERENCE DESIGNATION	FIGURE AND INDEX NO.	REFERENCE DESIGNATION	FIGURE AND INDEX NO.	REFERENCE DESIGNATION	FIGURE AND INDEX NO.
W331−306	63−39	W36/136−301	63−106		
W331−307	63−69	W360	45−94		
W332−308	63−50	W360P1	45−95		
W332−309	63−57	W360P2	45−95		
W332−310	63−42 63−64	W361	45−96		
W332−311	63−67	W361P1	45−97		
W333−304	63−38	W361P2	45−97		
W333−305	63−62	W365	45−98		
W333−306	63−40	W365P1	45−99		
W333−307	63−70	W365P2	45−100		
W340−308	63−51	W902	63−73		
W340−309	63−58	W905	20−424 63−122		
W340−310	63−65	W910−302	63−74		
W340−311	63−68	W910−305	63−75		
W347	45−77	W910−306	63−76		
W347P1	45−78	W910−307	63−77		
W347P2	45−79	WG1	1−7		
W348	45−80	WG2	1−8		
W348P1	45−81	WG3	1−8 2−65		
W348P2	45−81	WG4	1−9		
W349	45−82	WG5	1−10		
W349P1	45−83	WG6	1−11		
W349P2	45−83	WG7	1−12		
W350	45−84	WG8	1−13		
W350P1	45−85	WG9	1−13		
W350P2	45−85	WG10	1−14		
W351	45−86	WG11	1−14		
W351P1	45−87	WG12	1−15		
W351P2	45−87	WG13	1−15		
W352	45−88	WG14	1−16		
W352P1	45−89	WG15	1−16		
W352P2	45−89	WG16	1−17		
W353	45−90	WG17	1−18		
W353P1	45−91	WG18	1−19		
W353P2	45−91	WG20	1−21		
W356	50−39	WG21	1−23		
W356P1	50−40	WG22	1−24		
W356P2	50−40				
W359	45−92				
W359P1	45−93				
W359P2	45−93				