NSN: NWS0-41-890-0001

ASN: XEHB-6-04-11

DESCRIPTION: **Combined Modification Document – Modification Note 74**
TCTO 31P1-4-108-628
EEM 6345.1 CHG 56, Chap 51
Addition of an Embedded Console Server to the UD70/170 Radar Product Generator

DATE OF ISSUE: July 7, 2004

QUANTITY OF ISSUE: EACH

NWS: EHB-6, Modification Note 74
DoD: TO 31P1-4-108-628
FAA: EEM Modification Handbook 6345.1 CHG 56, Chap 51

ADDITION OF AN EMBEDDED CONSOLE SERVER TO THE UD70/170 RADAR PRODUCT GENERATOR

DOPPLER METEOROLOGICAL RADAR WSR-88D

DoD Distribution Statement A - Approved for public release; distribution is unlimited.

PUBLISHED UNDER AUTHORITY OF THE SECRETARIES OF
COMMERCE, THE AIR FORCE, THE NAVY, AND TRANSPORTATION

Issuance Number: EHB 6-04-11
Data Code: 3119809
Issuance Date: 7 July 2004
NWS/DoD Rescission Date: 1 August 2005

FAA APPROVAL

James Pritchard

Digitally signed by James Pritchard
DN: CN = James Pritchard, C = US, OU = AOS-200
Date: 2004.07.19 08:35:18 -05'00'

_____ **Date** _____

Richard A. Thoma
Director of Technical
for Operations Support

NWS APPROVAL:

Signature valid

Mark S. Paese

Digitally signed by Mark S. Paese
DN: cn=Mark S. Paese, o=DOC/NOAA/NWS, c=US
Date: 2004.07.13 07:26:54 -04'00'

_____ **Date** _____

Mark S. Paese
Director, Maintenance, Logistics
and Acquisition Division

DoD APPROVAL:

BY ORDER OF THE SECRETARY OF THE AIR FORCE

JOHN P. JUMPER, General, USAF
Chief of Staff

Digitally signed by Ed Berkowitz
DN: CN = Ed Berkowitz, C = US, O = ROC, OU = Program Branch
Reason: I am approving this document
Date: 2004.07.13 10:43:14 -05'00'

_____ **Date** _____

Edward L. Berkowitz, Chief
Program Branch
Radar Operations Center
TOMA

1. SUBJECT

Addition of an Embedded Console Server to the UD70/170 Radar Product Generator (RPG).

2. PURPOSE

This document provides instructions to add an Embedded Console Server, UD70A7A4 to the UD70/170 Radar Product Generator (RPG), UD70A7. The purpose of the embedded console server is to provide maintainers dedicated console port access to RPG devices, minimize the use of the RPG technician kit, and to allow automated configuration of connected devices. During initial deployment console port access will be available via the console server to the Cisco LAN Switch (UD70A13), the Cisco Router (UD70A2), and the PTI MPS800 Communication Servers (UD70A15, UD70A16, and UD70A17). Future RPG software builds will include changes to provide dedicated console port access to the A10 Power Administrator and A11 UPS assembly. The authority for this modification is ECP 0184, RPG Embedded Console Server.

For additional information concerning this document, contact the Radar Operations Center (ROC) Hotline, Norman, OK; phone number: (800) 643-3363 or (405) 366-2980 or by e-mail at NEXRAD.Hotline@noaa.gov. An electronic copy of this document can be found at the following Internet address:

www.roc.noaa.gov/ssb/sysdoc/techman/tmlinks.asp

3. SITES AFFECTED

See ATTACHMENT 4.

4. ESTIMATED COMPLETION DATE

This modification must be reported completed no later than 60 days after receipt of this document and the date the kit was shipped from the National Logistics Support Center (NLSC).

5. EQUIPMENT AFFECTED

Radar Product Generator Group.

6. SPARES AFFECTED

UD70/170A7 spares stock at the National Logistics Supply Center (NLSC) will have the new PCI card installed.

7. MODIFICATION ACCOMPLISHED BY

Site electronics technicians will perform this modification. One technician is required to perform this action.

8. MATERIAL REQUIRED

The following parts are required to accomplish this modification:

Nomenclature	Part Number	NSN	Qty
Serial, 8-Port, Circuit Card	2200138-204	NWS0-40-210-0001	1
Octopus Cable (located in the same box as the Serial Card)	23200132-301		1
2 Serial Cables for Cisco Console Ports, MFR Part Number CBCC260937	2200142-201	NWS0-33-460-0002	2
3 Serial Cables for PTI Communication Server Console Ports MFR Part Number CBCC260938	2200142-202	NWS0-33-460-0003	3
Adapter, Loopback, DB25F	2200139-201	5935-01-517-9361	3
Cable Marker Kit	2340030-301		
Cable Marker Kit	2340031-302		1
Tie Wraps	MS3367-2-9	5975-00-156-3253	1 pk

FAA sites will receive two kits of the quantity shown above.

9. SOURCE OF MATERIALS

Kits are requisitioned by the ROC Retrofit Management Team and shipped at no cost to the site.

10. SPECIAL TOOLS AND TEST EQUIPMENT REQUIRED

Not applicable.

11. TIME AND PERSONNEL REQUIRED

Work Phases	Work-hours
Unpacking	0.1
Disassembly	0.3
Installation	0.1
Assembly	1.0
Operational Check	0.5
Total Work-hours	2.0

FAA sites will be twice the work-hours shown above (2.0 hrs per channel).

12. DOCUMENTS AFFECTED

a. **Technical Manual, System Description, Revision 4, dated 31 March 2003**
NWS: EHB 6-500, Change 2
DoD: AFTO 31P1-4-108-1, Change 2
FAA: TI 6345.1 V1, Change 2
Navy: EM400-AA-MMM-010/WSR-88D, Change 2

b. **Technical Manual, Work Unit Code, Revision 1, dated 1 November 2001**
NWS: EHB 6-502, Change 4
DoD: AFTO 31P1-4-108-06, Change 4
FAA: TI 6345.1 V3, Change 4
Navy: EM400-AC-WUC-010, Change 4

c. **Technical Manual, Illustrated Parts Breakdown, Revision 8, dated 30 June 2004**
NWS: EHB 6-501
DoD: AFTO 31P1-4-108-4
FAA: TI 6345.1 V2
Navy: EM 400-AB-IPB-010

d. **Technical Manual, Maintenance Instructions, Radar Product Generator (RPG), Revision 2, dated 30 June 2004**
NWS: EHB 6-525
DoD: AFTO 31P1-4-108-452-1
FAA: TI 6345.1 V49

13. VERIFICATION STATEMENT

This modification was successfully installed at the Radar Operations Center, Norman, OK.

14. DISPOSITION OF REMOVED AND REPLACED PARTS/MATERIALS

Not applicable.

15. PROCEDURES

Perform the procedures in ATTACHMENT 1, ATTACHMENT 2 and ATTACHMENT 3.

16. FAA DISTRIBUTION

This directive is distributed to selected offices and services within Washington headquarters, the William J. Hughes Technical Center, the Mike Monroney Aeronautical Center, regional Airway Facilities divisions, and Airway Facilities field offices having the following facilities/equipment: NXRAD.

17. CHANGES TO TABLE OF CONTENTS (FAA)

This chapter will be included in the next revision to the table of contents for FAA Order 6345.1, Electronic Equipment Modification Handbook - Next Generation Weather Radar (NEXRAD).

18. RECOMMENDATIONS FOR CHANGES (FAA)

Forward any recommendations for changes to this directive through normal channels to the National Airway Systems Engineering Office, AOS-200, Operational Support.

19. REPORTING INSTRUCTIONS

a. NWS

Report completed modification on WS Form A-26, Engineering Management Reporting System Maintenance Record, according to the instructions in NWS Instruction (NWSI) 30-2104, Engineering Management Reporting System (EMRS), part 4 and Appendix E. Include the following information on the WS Form A-26:

- An Equipment Code of RPG in Block 7.

- The appropriate serial number in Block 8.

- A Mod No. of 74 in Block 17a.

A sample EMRS report is provided as ATTACHMENT 6.

b. DoD

Update the AFTO Form 95 to show TCTO compliance. Report TCTO compliance in accordance with TO 00-20-2, Table 3-10, Rule 9.

c. FAA

Enter this directive number, date, and chapter number on the appropriate FAA Form 6032-1, Airway Facilities Modification Record. Use the Maintenance Management System (MMS) application Log Equipment Modification (LEM) function to report the completion of this modification. Verify N is in the REP COD field to ensure the log entry will be upward reportable to the national data base for access by AOS. This directive should be entered into the LEM fields as follows:

Providing your equipment is listed in the Facility/Service Equipment Profile (FSEP), the Maintenance Organization has opened a Log Equipment Modification (LEM) record in the Maintenance Management System (MMS). Upon completion of this modification, you are required to close the LEM record and change the Maintenance Action Code (MAC) to a "G" if the modification was completed or a "W" if the modification is not applicable. In the event that your equipment is not listed in the FSEP, it is your responsibility to open the LEM record upon receipt/completion of this Modification. Verify that an "N" is in the "REP COD" field to ensure that the log entry will be upwardly reportable to the national database for National MOD Tracking. The data is to be entered into the LEM as follows:

FAC/SERV: NXRAD

LOC/DENT: Refer To Distribution List

SHORT NAME: SYS

Order No.: 6345.1

Chapter: 51

Change: 56

d. DoD

Complete ATTACHMENT 5, and return the information to the ROC by one of the four methods below:

(1) Mail Address: Program Branch, Retrofit Management Team
WSR-88D Radar Operations Center
3200 Marshall Ave., Suite 101
Norman, Oklahoma 73072-8028

(2) Fax Number: (405) 573-3480
ATTN: Retrofit Management Team

(3) E-mail Address: NEXRAD.Logistics@noaa.gov

(4) Web Version: http://www.roc.noaa.gov/ssb/logistics/completion.asp

ATTACHMENT 1

EMBEDDED CONSOLE SERVER INSTALLATION PROCEDURES

Tools/Materials Required:

Flashlight
Screwdriver set, Phillips-tip
ESD Component Handling Kit

1. Send a Free Text Message (FTM) to WSR-88D Unit interface(s). The FTM can be generated through the RPG. Messages should be designated to all WSR-88D interfaces to notify users of radar downtime due to maintenance.

   a. At the RPG HCI, click on **CONSOLE MESSAGES**. Clicking on the **Clear** button at this point will completely clear out the Outgoing Messages of any text that might be left from the previous outgoing message.

   b. Enter the desired message such as "Radar maintenance required. Estimated downtime 2 hours."

   c. Select the destination(s) for the outgoing message. This is accomplished in the `Destinations` area of the window by clicking on the box next to the desired destination(s) which places a check mark in the box. The outgoing message is sent only to the destination selection(s) that have a check mark present in the box. The `All` selections in the Class 1 area.

   d. Click on the **Send** button to send the outgoing message to the selected destination(s).

   e. Click on the **Close** button to close the `Console Messages` window.

2. Using the labels provided with each cable type, apply labels according to figures 1 and 2 and reference tables 1 through 3 below.

ATTACHMENT 1 (Continued)

EMBEDDED CONSOLE SERVER INSTALLATION PROCEDURES

NOTE

Cables 315B and 315C are wired differently than cables 315F through 315H. Cables 315B and 315C are wired for Cisco console ports (UD70/170A2 and UD70/170A13) and are marked with manufacturer part number CBCC260937, cables 315F through 315H are for PTI Communication Server console ports (UD70/170A15, UD70/170A16, and UD70/170A17) and are marked with manufacturer part number CBCC260938

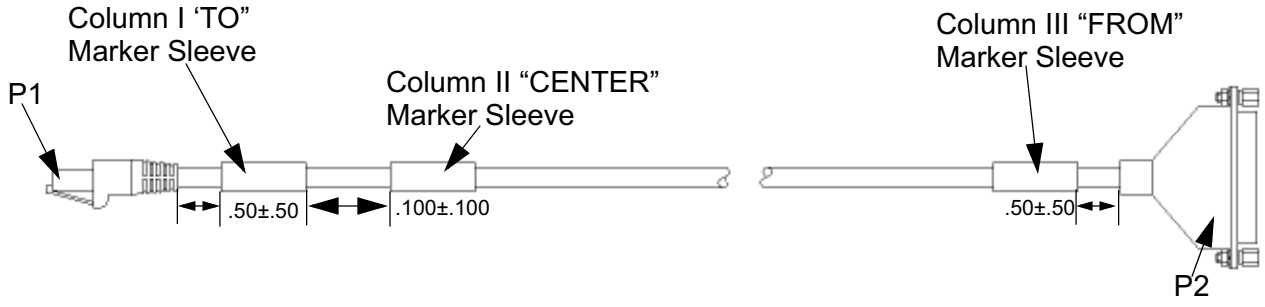

Figure 1. Serial Cable Assemblies

ATTACHMENT 1 (Continued)

EMBEDDED CONSOLE SERVER INSTALLATION PROCEDURES

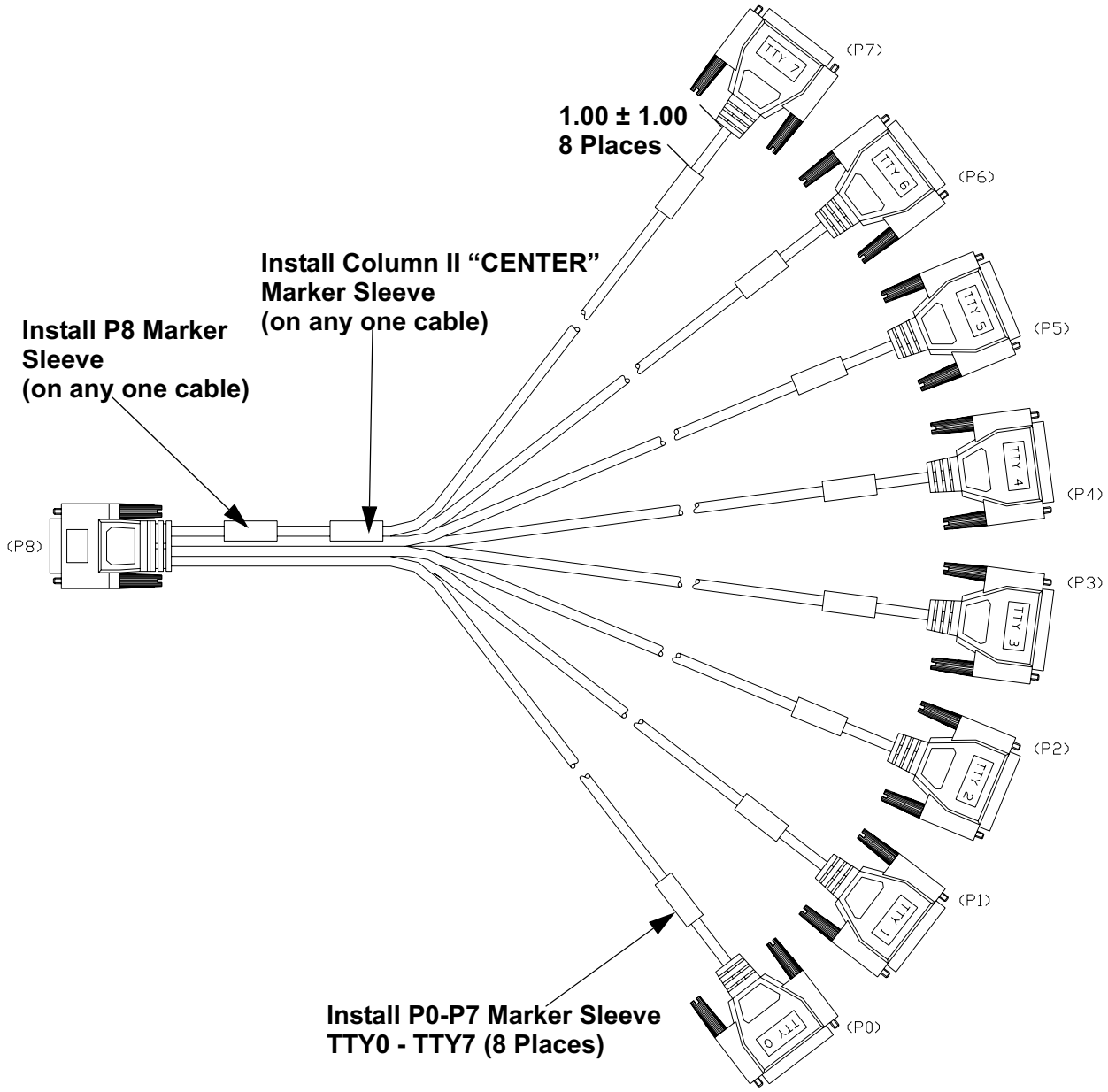

Figure 2. Octopus Cable Assembly

ATTACHMENT 1 (Continued)

EMBEDDED CONSOLE SERVER INSTALLATION PROCEDURES

Table 1: Labels for Serial Cables (MFR Part Number CBCC260937) Connecting to Cisco Console Ports

COLUMN I "TO"	COLUMN II "CENTER"	COLUMN III "FROM"
70/170W315B P1 (A13 CONSOLE)	70/170W315B 0WY55ASSY2320133-301	70/170W315B P2 (70/170W315 P1)
70/170W315C P1 (A2A1 CONSOLE)	70/170W315C 0WY55ASSY2320133-301	70/170W315C P2 (70/170W315 P2)

Table 2: Labels for Serial Cables (MFR Part Number CBCC260937) Connecting the PTI Communications Servers

COLUMN I "TO"	COLUMN II "CENTER"	COLUMN III "FROM"
70/170W315F P1 (A15 CONSOLE)	70/170W315F 0WY55ASSY2320133-302	70/170W315F P2 (70/170W315 P5)
70/170W315G P1 (A16 CONSOLE)	70/170W315G 0WY55ASSY2320133-302	70/170W315G P2 (70/170W315 P6)
70/170W315H P1 (A17 CONSOLE)	70/170W315H 0WY55ASSY2320133-302	70/170W315H P2 (70/170W315 P7)

ATTACHMENT 1 (Continued)

EMBEDDED CONSOLE SERVER INSTALLATION PROCEDURES

Table 3: Labels for Octopus Cable

COLUMN I "TO"	COLUMN II "CENTER"	COLUMN III "FROM"
70/170W315 P8 (A7A4J1)	70/170W315 0WY55ASSY2320132-301	70/170W315 Blank
		70/170W315 P7 (70/170W315H P2)
		70/170W315 P6 (70/170W315G P2)
		70/170W315 P5 (70/170W315F P2)
		70/170W315 P4 (CP18)
		70/170W315 P3 (CP17)
		70/170W315 P2 (70/170W315C P2)
		70/170W315 P1 (70/170W315B P2)
		70/170W315 P0 (CP16)

3. Open the RPGPCA cabinet doors and locate the RPG Processor Assembly UD70A7.

4. For NWS Sites to access the RPG processor:

   a. Pressing the **<Scroll Lock>** button twice on the keyboard will cause the `Login Menu` or the `Selection Menu` to appear on the monitor.

   b. If a `Login Menu` appears, continue with this step, otherwise continue to step c. Enter **raritan<Return>** for the user (no password). The `Selection Menu` will appear on the monitor.

   c. Under normal conditions, the RPG processor is channel 1, the BDDS processor is channel 2, and KBD Failure is channel 3.

   d. Using the ↑ and ↓ keys on the keyboard, highlight the RPG processor channel. Press **<CR>** to invoke the selection.

ATTACHMENT 1 (Continued)

EMBEDDED CONSOLE SERVER INSTALLATION PROCEDURES

CAUTION

Failure to perform the applicable shutdown procedures in steps 5 through 8 could cause serious damage to the RPG processor.

5. If currently logged in, click on the **EXIT** button and then the **OK** button to log out of the CDE and return to the CDE Login screen.

6. Push the power button on the front of the RPG processor. There will be no immediate response for approximately 50 seconds, then another 20 seconds to complete the shutdown process. The system should shut down and an `ok` prompt will be displayed.

7. At the back of the RPG processor turn the power switch to **OFF**.

8. Place the ESD conductive mat upon the work surface and connect the clip lead to the chassis frame for a proper ground.

WARNING

Lethal voltages (from commercial power, CRTs, high-voltage power supplies, and low-voltage, high current power supplies) are present in much of the RPG Group equipment. Observe appropriate safety precautions at all times to ensure personnel safety. The maintenance technician must be familiar with the safety summary at the beginning of NWS EHB 6-525, AF TO 31P1-4-108-452-1, FAA TI 6345.1 V49 prior to performing any maintenance procedure.

9. Turn the power **OFF** to the Monitor.

10. Turn the power **OFF** to the Backup Storage Device.

11. Disconnect the following cables from the RPG processor (UD70A7)

    a. Locate and disconnect the AC power cord from the back of the RPG processor.
       - NWS and DoD: UD70/170W50
       - FAA: UD70/170W61

    b. Disconnect the Keyboard and Video cables from their respective ports on the RPG processor.
       - NWS: Cable UD70/170W303 and Cable UD70/170W303A
       - FAA and DoD: Keyboard and Monitor cable

    c. MLOS sites only: Disconnect the serial cable UD70/170W257 from the Serial Port.

    d. Disconnect the UPS serial cable UD70/170W255 from Serial Port B.

ATTACHMENT 1 (Continued)

EMBEDDED CONSOLE SERVER INSTALLATION PROCEDURES

e. Disconnect the LAN cable UD70/170W201 from the Network Port.

f. DoD and FAA sites: Disconnect the serial cable UD70/170W250 from Serial Card in PCI Slot 2, Port 0.

g. NWS sites:

(1) Disconnect cable UD70/170W253 from the Serial Card in PCI Slot 2, Port 3.

(2) Disconnect cable UD70/170W251 from the Serial Card in PCI Slot 2, Port 1.

h. FAA sites:

(1) Disconnect the serial cable UD70/170W252 from the Serial Card in PCI Slot 2, Port 2.

(2) Disconnect UD70/170W302 from the DIO Card in PCI Slot 4.

i. Disconnect cable W301 from the PCI11 port.

12. Extend the RPG processor sliding shelf forward until the RPG processor is clear of the RPGPCA. The rails on the shelf are designed to not extend any further than safely permitted.

WARNING

Until the RPG processor shelf is slid back into the RPGPCA, it represents a possible injury hazard to personnel. Use caution while standing or working near the extended shelf to prevent striking or tripping over the shelf.

NOTE

There is a green 2-stage lock button on each side of the shelf rails, which acts as a locking mechanism while the shelf is extended. To slide the shelf back into the RPGPCA these green buttons must be depressed until the shelf is slid past the locking mechanism.

WARNING

Pinched or cut fingers may result if care is not taken while depressing the green lock buttons and sliding the shelf inward.

13. Release the Velcro straps which secure the RPG processor (UD70/170A7) to the shelf.

14. Remove the RPG processor from the processor shelf and place onto ESD conductive mat.

ATTACHMENT 1 (Continued)

EMBEDDED CONSOLE SERVER INSTALLATION PROCEDURES

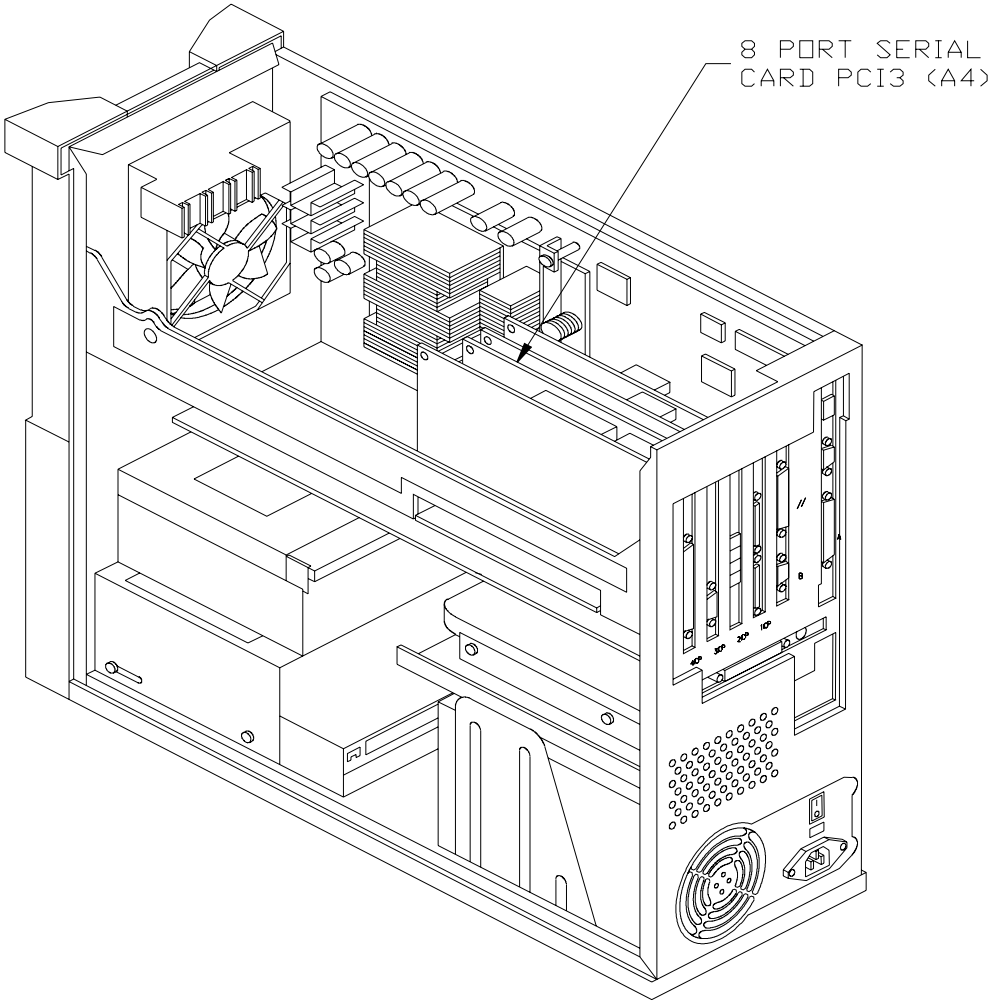

NX1645

Figure 3. UD70/170A7 Shown with UD70/170A4, 8-port Serial Card Installed

ATTACHMENT 1 (Continued)

EMBEDDED CONSOLE SERVER INSTALLATION PROCEDURES

15. To remove the RPG processor cover perform the following steps:

    a. Position the RPG processor upside-down.

    b. Remove the four screws, on the back of the processor, securing the RPG processor cover to the chassis.

    c. Slide the cover towards the back of the processor to disengage the cover from the cover tabs.

    d. Lift the RPG processor cover straight up.

    e. Set the RPG processor cover aside.

ESD CAUTION **ESD**

The 8-Port Serial Card is an electrostatic sensitive device which requires special handling. Refer to NWS EHB 6-525, AF TO 31P1-4-108-452-1, FAA TI 6345.1 V49, paragraph 6-5.2.7.

16. Put ESD wrist strap on bare wrist and connect clip lead to the chassis frame or proper ground.

17. Locate PCI Slot 3 (UD70/170A7A4) in the RPG processor. (Refer to Figure 3 for the PCI Slot Location)

ATTACHMENT 1 (Continued)

EMBEDDED CONSOLE SERVER INSTALLATION PROCEDURES

18. Remove the bezel in slot PCI 3. Discard the bezel and retain the mounting screw. Install the 8-Port Serial Card in slot PCI 3 and secure with the mounting screw that originally mounted the bezel. Proper installation will result in the configuration shown in Figure 4.

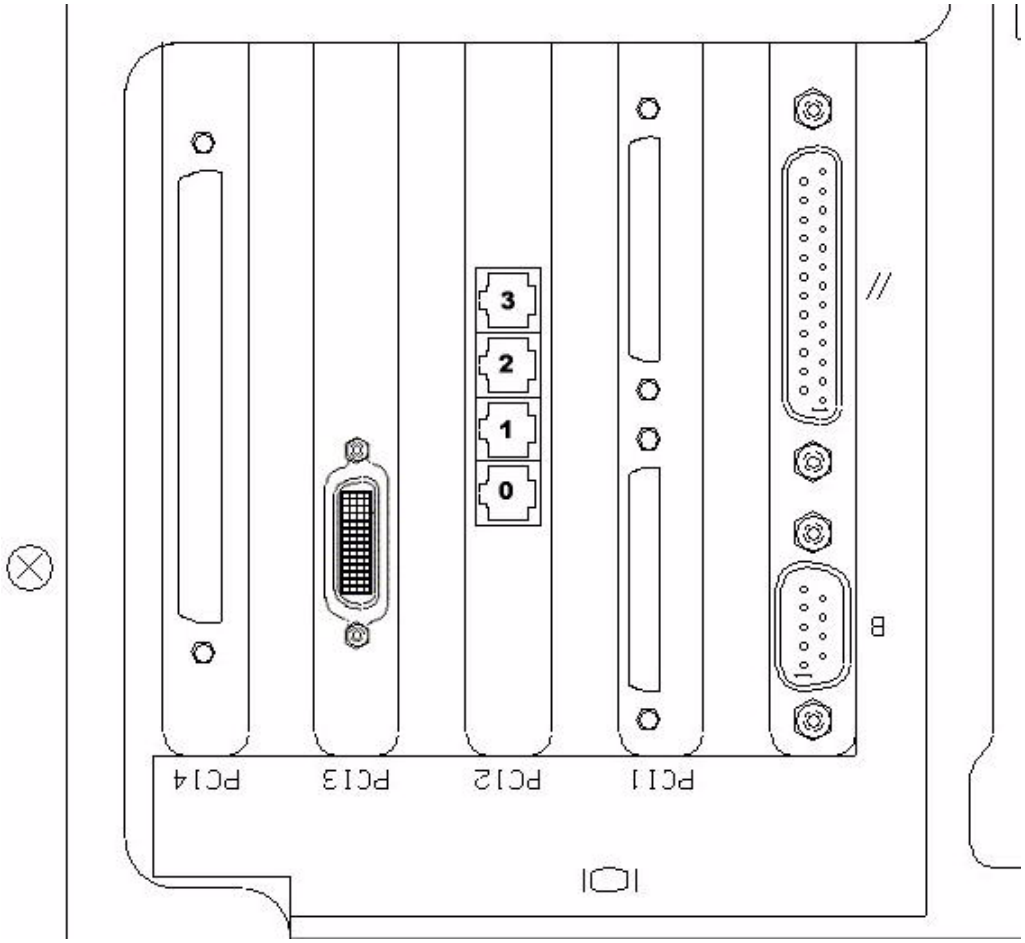

Figure 4. UD70/170A7 Rear View with UD70/170A7A4 8-Port Serial Card Installed

19. Remove the ESD wrist strap.

20. Reverse steps 7 through 15 to complete installation of the new 8-port Serial Card and to reinstall RPGPCA into RPG cabinet.

21. Prepare Octopus cable for installation.

ATTACHMENT 1 (Continued)

EMBEDDED CONSOLE SERVER INSTALLATION PROCEDURES

a. Lay out Octopus cable on flat surface. At approximately 3 inches from end of the cables install cable tie to create two bundles, P0-P3, and P4-P7 as shown in Figure 5.

Figure 5. Octopus Cable, Step 1

b. Install cable ties on each bundle of four along length of cable.

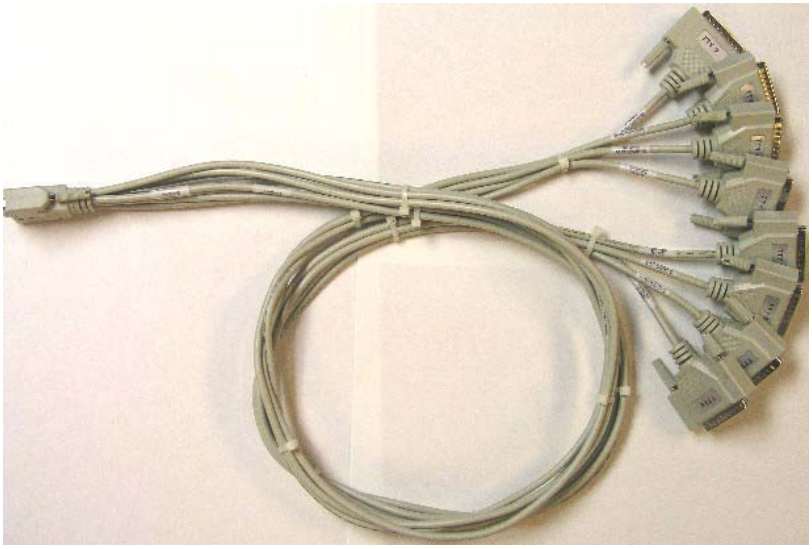

Figure 6. Octopus Cable, step 2

ATTACHMENT 2

OCTOPUS AND SERIAL CABLE INSTALLATION INSTRUCTIONS

Tools Required:

Screwdriver set, Flat-tip

Diagonal cutter pliers

Flashlight

1. Installation of Octopus Cable assembly onto processor shelf.

   a. Remove cable tie securing cable bundle to the rear of the processor shelf as shown below.

ATTACHMENT 2 (Continued)

OCTOPUS AND SERIAL CABLE INSTALLATION INSTRUCTIONS

b. Extend the sliding shelf the RPG processor rests on, forward, out of the RPGPCA until the RPG processor is clear of the RPGPCA. The rails on the shelf are designed to not extend any further than safely permitted.

WARNING

Until the RPG processor shelf is slid back into the RPGPCA, it represents a possible injury hazard to personnel. Use caution while standing or working near the extended shelf to prevent from striking or tripping over the shelf.

NOTE

There is a green 2-stage lock button on each side of the shelf rails, which acts as a locking mechanism while the shelf is in the outward position. To slide the shelf back into the RPGPCA these green buttons must be depressed until the shelf slides past the locking mechanism.

WARNING

Pinched or cut fingers may result if care is not taken while depressing the green lock buttons and sliding the shelf inward.

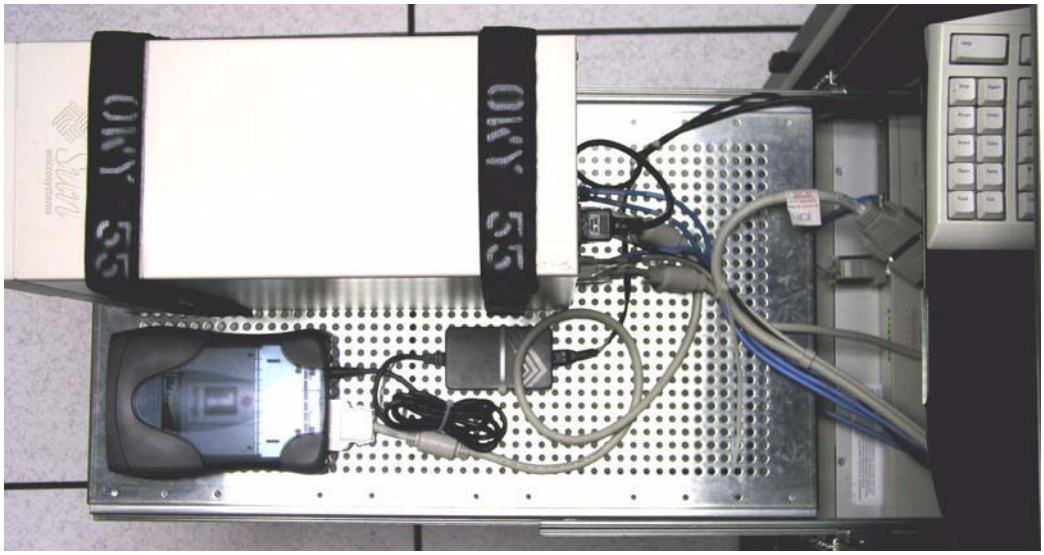

ATTACHMENT 2 (Continued)

OCTOPUS AND SERIAL CABLE INSTALLATION INSTRUCTIONS

c. Using cable tie, secure existing data cables to shelf as shown below. Use 5th row of holes from rear of shelf, centered on shelf.

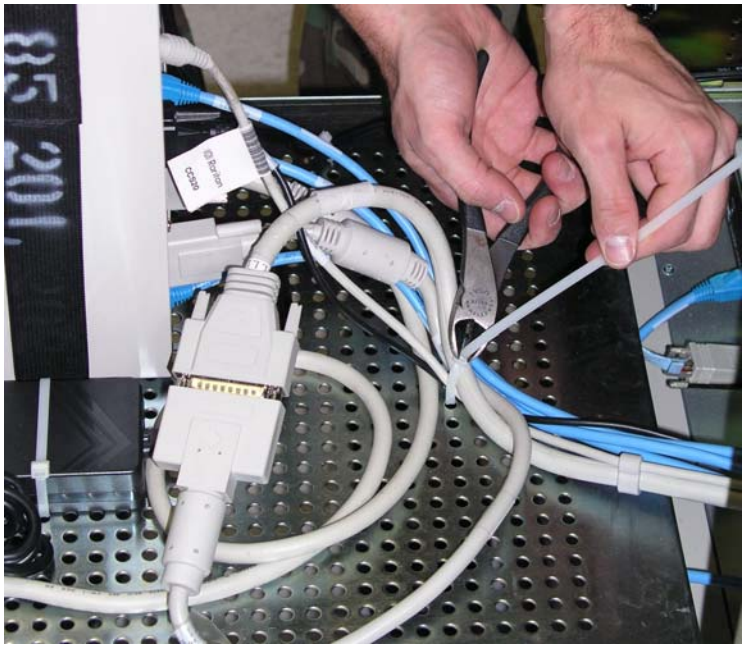

d. Feed P0 - P3 to left side, P4 - P7 to right side, and feed P8 from right to left under the cable bundle secured in the last step.

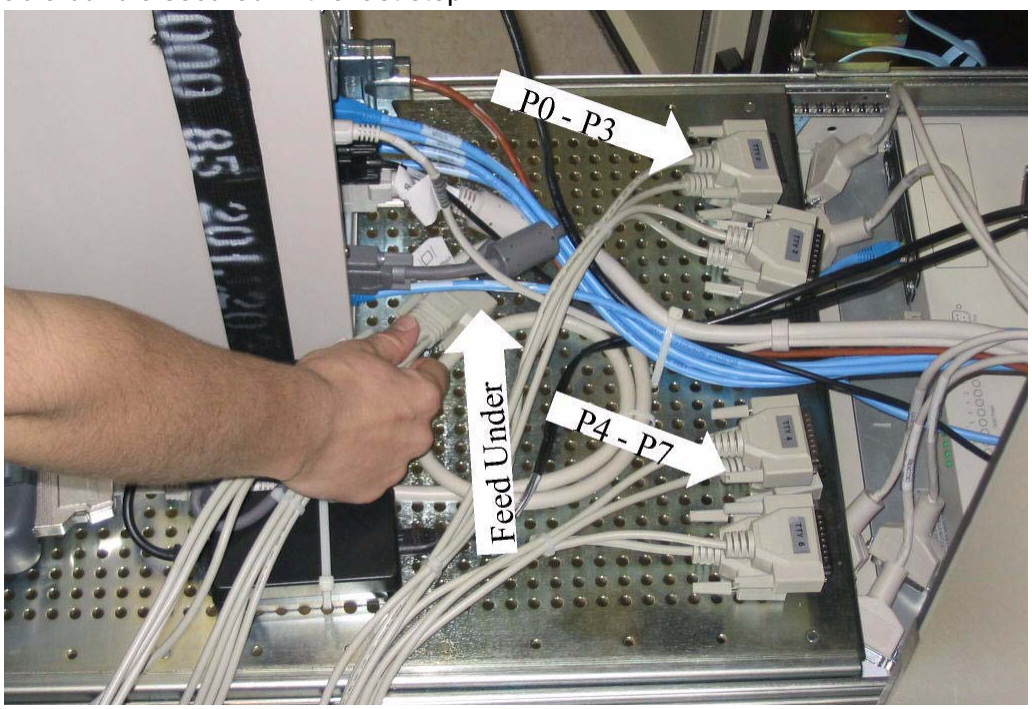

ATTACHMENT 2 (Continued)

OCTOPUS AND SERIAL CABLE INSTALLATION INSTRUCTIONS

e. Wrap P8 connector around the cable bundle, then feed J8 under cable bundle and secure to PCI 3 J1 with thumb screws.

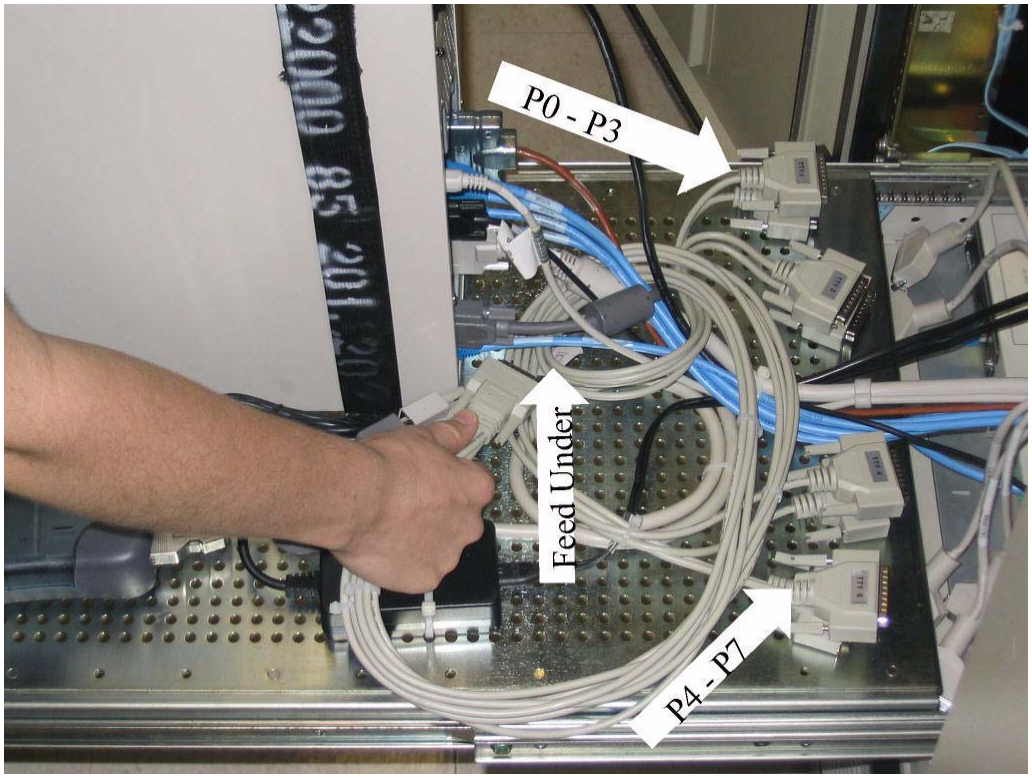

ATTACHMENT 2 (Continued)

OCTOPUS AND SERIAL CABLE INSTALLATION INSTRUCTIONS

f. Stack and secure P0 (TTY0) and P1 (TTY1) to shelf with tie wraps.

g. Stack and secure P2 (TTY2) and P3 (TTY3) to shelf with tie wraps.

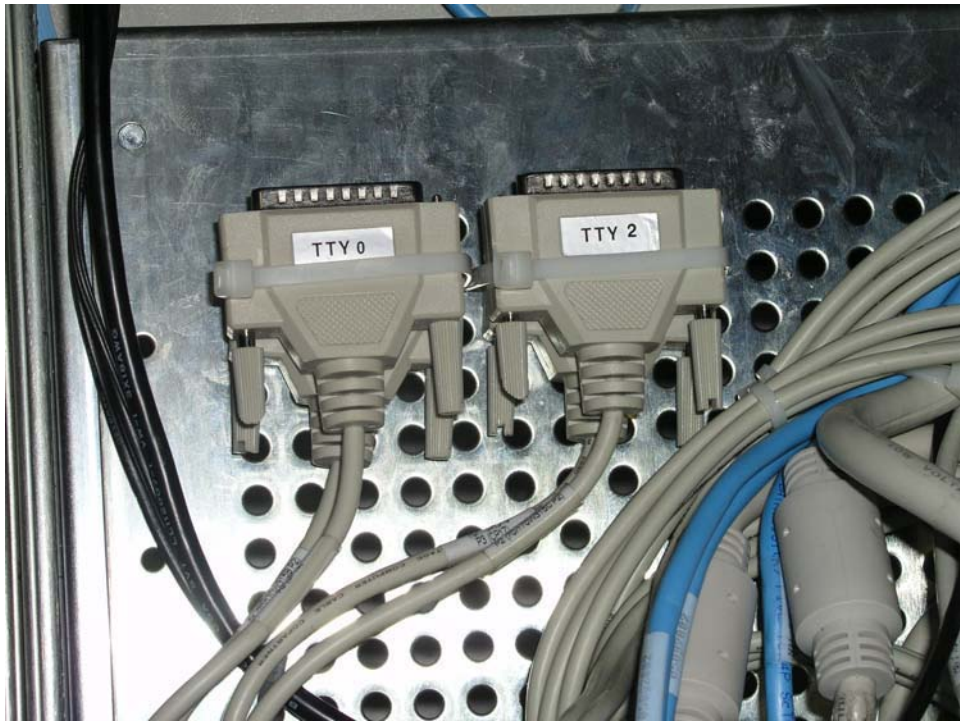

ATTACHMENT 2 (Continued)

OCTOPUS AND SERIAL CABLE INSTALLATION INSTRUCTIONS

h. Stack and secure P6 (TTY6) and P7 (TTY7) to shelf with tie wraps.

i. Stack and secure P4 (TTY4) and P5 (TTY5) to shelf with tie wraps.

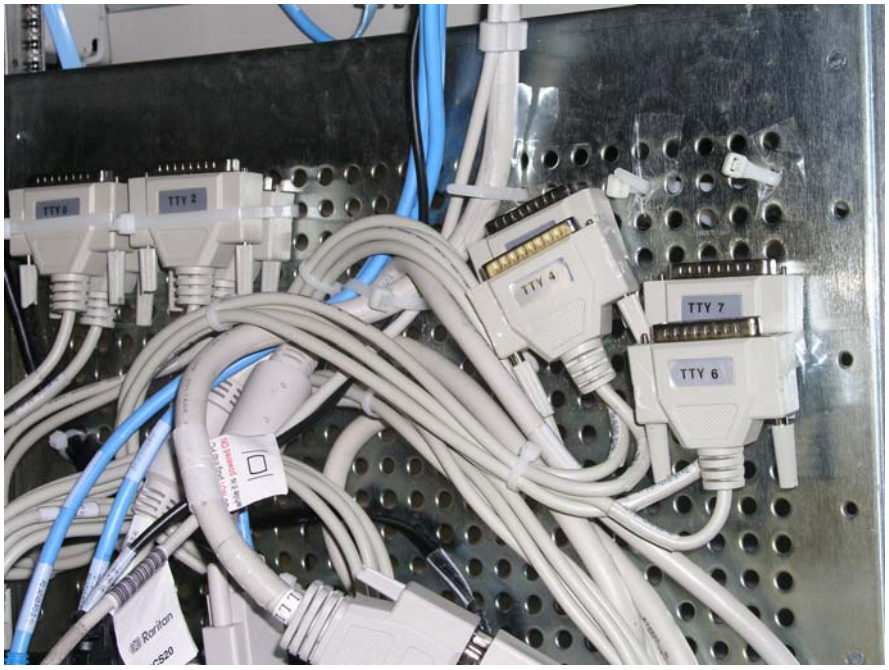

ATTACHMENT 2 (Continued)

OCTOPUS AND SERIAL CABLE INSTALLATION INSTRUCTIONS

j. Secure Octopus Cable to shelf with cable tie for strain relief of P8 connection to PCI card.

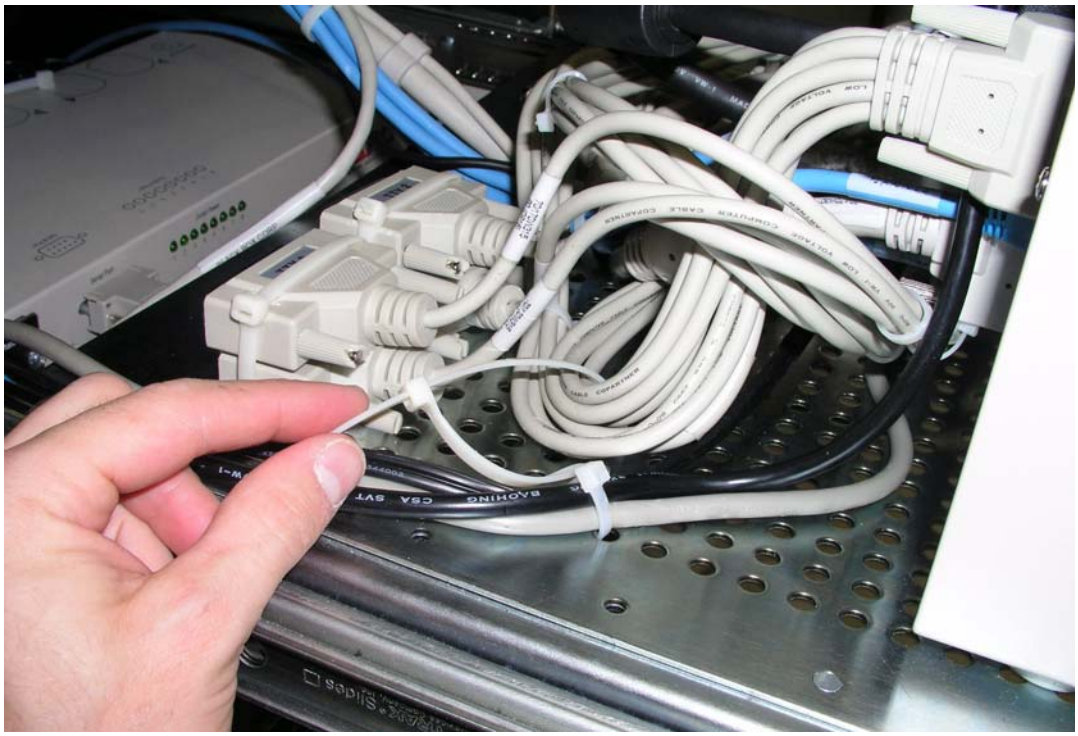

Installed Octopus Cable (Rear View)

ATTACHMENT 2 (Continued)

OCTOPUS AND SERIAL CABLE INSTALLATION INSTRUCTIONS

2. Install serial cables for PTI MPS800 Communication Servers (UD70/170A15, UD70/170A16, and UD70/170A17). Using the installed W201 as an example, include enough slack to allow for movement of the sliding shelf. Connect and route the following cables within the UD70/170 cabinet choosing the most logical and direct path. Avoid cable routing that will obstruct cabinet doors or hinder movement of the sliding shelf.

    a. Connect and route 70/170W315F from P5 of Octopus Cable assembly through the upper slotted opening at right rear bay to A15 console port. Tighten thumb screws.

    b. Connect and route 70/170W315G from P6 of Octopus Cable assembly through the upper slotted opening at right rear bay to A16 console port. Tighten thumb screws.

    c. Connect and route 70/170W315H from P7 of Octopus Cable assembly through the upper slotted opening at right rear bay to A17 console port. Tighten thumb screws.

3. Install serial cables for Cisco LAN Switch (UD70A13) and Cisco Router (UD70A2). Using the installed W201 as an example, include enough slack to allow for movement of the sliding shelf. Connect and route the following cables within the UD70/170 cabinet choosing the most logical and direct path. Use cable ties to secure cables and provide strain relief. Avoid cable routing that will obstruct cabinet doors or hinder movement of sliding shelf.

    a. Connect and route 70/170W315B from P1 of Octopus Cable assembly through the upper slotted opening at right rear bay to A13 console port. Tighten thumb screws.

    b. Connect and route 70/170W315C from P2 of Octopus Cable assembly to the rear right rail of the left cabinet and then feed the cable between A2 and A3, connect to the CON port of A2.

4. Connect provided DB25F loop-back adapters to unused Octopus cable assembly connectors P0, P3, and P4. Screw down male jack screws to ensure loop-back adapters are securely fastened.

ATTACHMENT 2 (Continued)

OCTOPUS AND SERIAL CABLE INSTALLATION INSTRUCTIONS

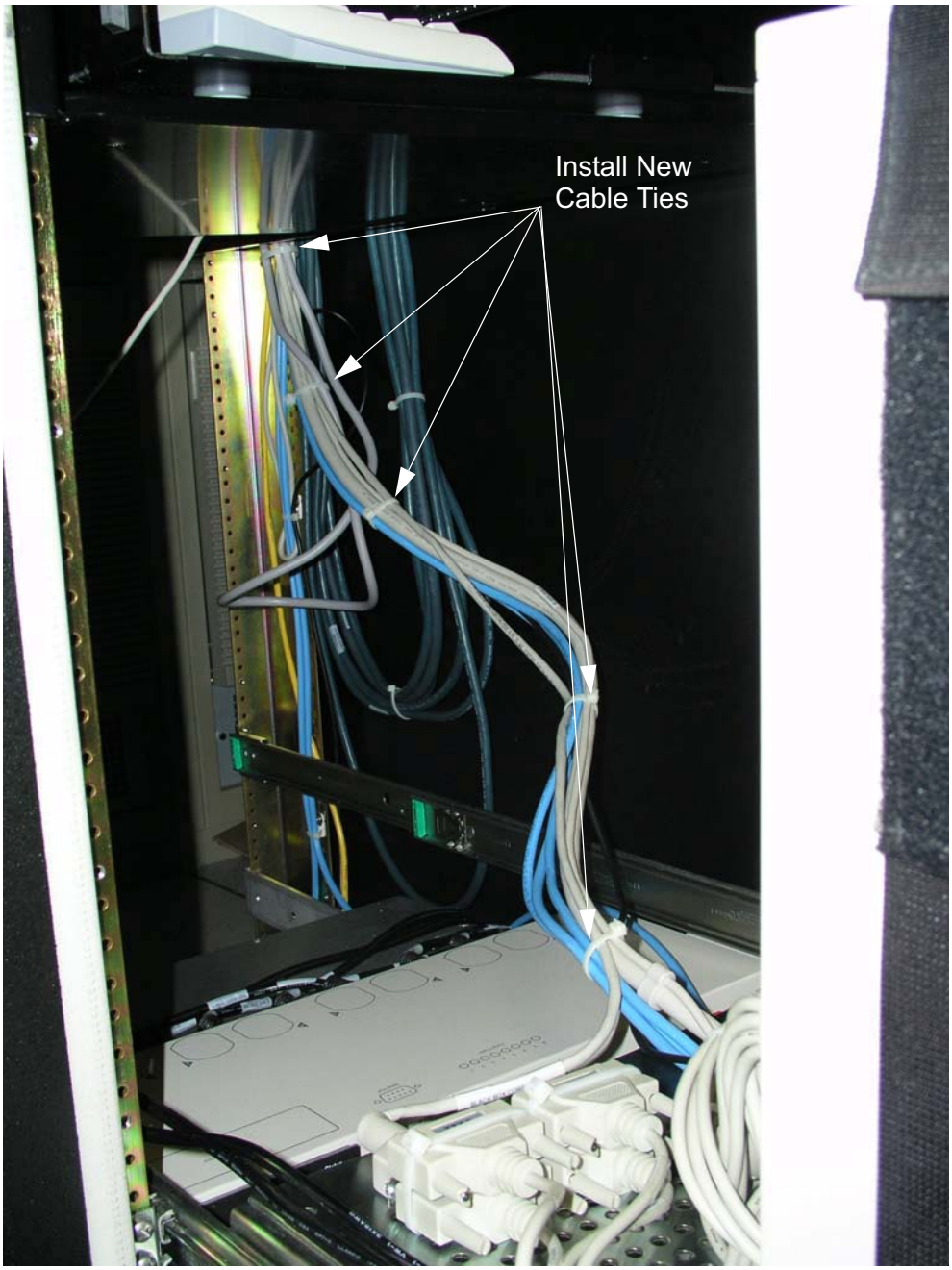

5. Complete ATTACHMENT 3 to configure and checkout the newly installed embedded console port server.

ATTACHMENT 3

EMBEDDED CONSOLE SERVER CHECK-OUT PROCEDURE

1. Open the RPGPCA cabinet doors and locate the RPG processor Assembly UD70A7.

2. NWS sites perform the following steps:

   a. Pressing the **<Scroll Lock>** button twice on the keyboard will cause the `Login Menu` or the `Selection Menu` to appear on the monitor.

   b. If a `Login Menu` appears, continue with this step, otherwise continue to step c. Enter **raritan<CR>** for the user (no password). The `Selection Menu` will appear on the monitor.

   c. Under normal conditions, the RPG processor is channel 1, the BDDS processor is channel 2, and KBD Failure is channel 3.

   d. Using the ↑ and ↓ keys on the keyboard, highlight the RPG processor channel. Press **<CR>** to invoke the selection.

CAUTION

Failure to perform the applicable shutdown procedures in steps 3 through 4 could cause serious damage to the RPG processor.

3. Push the power button on the front of the RPG processor. There will be no immediate response for approximately 50 seconds, then another 20 seconds to complete the shutdown process. The system will shut down and an `ok` prompt will be displayed.

4. At the `ok` prompt enter **boot -r <CR>**.

5. During boot-up you should see two instances of the MAGMA PCI driver as follows:

```
NOTICE:  MAGMA PCI DRIVER 5.2 (32/64 bit) for MAGMA 4 PCI
DMA instance 0

NOTICE:  MAGMA PCI DRIVER 5.2 (32/64 bit) for MAGMA 8 PCI
DMA instance 1
```

6. Allow RPGPCA to continue boot until you see the CDE login screen. Login to the CDE as a normal user.

7. If no terminal window is present, perform the following steps to open a terminal window:

   a. Right-click on the background.

   b. Select **Tools** from the `Workspace Menu`.

   c. Select **Terminal** window.

ATTACHMENT 3 (Continued)

EMBEDDED CONSOLE SERVER CHECK-OUT PROCEDURE

8. Perform the following Loopback adapter checkout steps:

   a. Select the `Terminal` window by clicking on the title bar.

   b. In the terminal window type **tip -9600 /dev/cua/4** and wait for the response `connected` to appear.

   c. With the terminal window selected, type some sample text at the prompt. If the serial card, cable and loop-back adapter are functioning properly text will be echoed to the terminal window as characters are typed. Enter **<Return>~. <Return>** to exit the tip session.

   d. Repeat steps 8b and 8c to check CP17 and CP18 by substituting the tip command in step 8b as follows:

tip command	Device	W315 Termination
tip -9600 /dev/cua/4	Adapter	P0 → Adapter (CP16)
tip -9600 /dev/cua/7	Adapter	P3 → Adapter (CP17)
tip -9600 /dev/cua/8	Adapter	P4 → Adapter (CP18)
Feedback for Loopback Adapters, CP16, CP17, and CP18: Text will be echoed to the `Terminal` window as characters are typed.		

9. Perform the following steps to checkout the LAN Switch UD70/170A13 and Router UD70/170A2 console connections:

   a. While still in the `Terminal` window, enter **tip -9600 /dev/cua/5** and wait for the response `connected` to appear.

   b. If the serial card, octopus cable, and serial cables are functioning properly for connection to the LAN switch UD70/170A13, feedback will be displayed as shown below.

   c. Repeat steps 9a and 9b to checkout the console connect to the Router UD70/170A2 by substituting the tip command in step 9a.

tip command	Device	W315 Termination
tip -9600 /dev/cua/5	LAN Switch, A13	P1 → W315B
tip -9600 /dev/cua/6	Router, A2	P1 → W315C

ATTACHMENT 3 (Continued)

EMBEDDED CONSOLE SERVER CHECK-OUT PROCEDURE

tip command	Device	W315 Termination

Feedback for LAN Switch UD70170A13 and Router UD70/170A2:
 	
`WARNING! US Gov system!`
`PL 99-474 prohibits unauthorized access. Violators may be fined or imprisoned. Persons using this system are subject to the consent to having all activities monitored/recorded.`		

10. Perform the following steps to checkout the PTI Communications Servers UD70/170A15, UD70/17016 and UD70/17017:

    a. While still in the `Terminal` window, enter **tip -9600 /dev/cua/9** and wait for the response `connected` to appear.

    b. Locate the power switch on the PTI Communications Server UD70/170A15 and turn it to the **OFF** position. Wait several seconds then turn the power switch to the **ON** position.

    c. If the serial card, octopus cable, and serial cable are functioning properly for connection to the PTI Communications Server, feedback will be displayed as shown in the table below.

    d. Repeat steps 10a and 10c to checkout the console connection to the Router UD70/170A2 substituting the tip command in step 10a as follows:

tip command	Device	W315 Termination
tip -9600 /dev/cua/9	PTI Comms A, A15*	P5 → W315F
tip -9600 /dev/cua/10	PTI Comms B, A16*	P6 → W315G
tip -9600 /dev/cua/11	PTI Comms C, A17*	P7 → W315H

Feedback for PTI MPS 800 Communication Servers:
 	
`MPS 800 initialization complete.`
`Begin configuration.`
`Server enet address 00:c0:8c:08:1c:01`
`PTI Prom Version 1.4`
`Press <spacebar> within next 5 seconds for configuration menu.`		

ATTACHMENT 3 (Continued)

EMBEDDED CONSOLE SERVER CHECK-OUT PROCEDURE

11. Quick Reference Guide for Devices using Embedded Console Server:

tip command	Device	W315 Termination,
tip -9600 /dev/cua/4	Adapter	P0 → Adapter (CP16)
tip -9600 /dev/cua/5	LAN Switch, A13	P1 → W315B
tip -9600 /dev/cua/6	Router, A2	P2 → W315C
tip -9600 /dev/cua/7	Adapter	P3 → Adapter (CP17)
tip -9600 /dev/cua/8	Adapter	P4 → Adapter (CP18)
tip -9600 /dev/cua/9	PTI Comms A, A15*	P5 → W315F
tip -9600 /dev/cua/10	PTI Comms B, A16*	P6 → W315G
tip -9600 /dev/cua/11	PTI Comms C, A17*	P7 → W315H

* PTI comms server will need to be power-cycled before a prompt will appear.
See EHB reference listed in table 5 below.

12. FAA sites: Repeat attachments 1 though 3 to modify the other channel.

ATTACHMENT 4

EFFECTIVITY

NWS

NEXRAD Site Name	City, ST	EQP	SID	ORG Code
	Eastern Region			
ALBANY	ALBANY, NY	RPG	ALY	WN9518
BINGHAMTON	JOHNSON CITY, NY	RPG	BGM	WN9515
BOSTON	TAUNTON, MA	RPG	BOX	WN9509
BROOKHAVEN	UPTON, NY	RPG	OKX	WN9912
BUFFALO	BUFFALO, NY	RPG	BUF	WN9528
BURLINGTON	SOUTH BURLINGTON, VT	RPG	BTV	WN9617
CARIBOU	CARIBOU, ME	RPG	CAR	WN9712
CHARLESTON, SC	CHARLESTON, SC	RPG	CHS	WN9208
CHARLESTON, WV	CHARLESTON, WV	RPG	RLX	WN9414
CINCINNATI	WILMINGTON, OH	RPG	ILN	WN9710
CLEVELAND	CLEVELAND, OH	RPG	CLE	WN9524
COLUMBIA	WEST COLUMBIA, SC	RPG	CAE	WN9310
GREER	GREER, SC	RPG	GSP	WN9312
MOREHEAD CITY	NEWPORT, NC	RPG	MHX	WN9307
NORFOLK	WAKEFIELD, VA	RPG	AKQ	WN9952

ATTACHMENT 4 (Continued)

EFFECTIVITY

NEXRAD Site Name	City, ST	EQP	SID	ORG Code
PHILADELPHIA	MOUNT HOLLY, NJ	RPG	PHI	WN9950
PITTSBURGH	CORAOPOLIS, PA	RPG	PBZ	WN9917
PORTLAND, ME	GRAY, ME	RPG	GYX	WN9938
RALEIGH/DURHAM	RALEIGH, NC	RPG	RAH	WN9306
ROANOKE	BLACKSBURG, VA	RPG	RNK	WN9954
STATE COLLEGE	STATE COLLEGE, PA	RPG	CTP	WN9925
STERLING	STERLING, VA	RPG	LWX	WN9931
WILMINGTON	WILMINGTON, NC	RPG	ILM	WN9301
	Southern Region			
ALBUQUERQUE	ALBUQUERQUE, NM	RPG	ABQ	WP9365
AMARILLO	AMARILLO, TX	RPG	AMA	WP9363
ATLANTA	PEACHTREE CITY, GA	RPG	FFC	WP9219
AUSTIN/SAN ANTONIO	NEW BRAUNFELS, TX	RPG	EWX	WP9253
BIRMINGHAM	ALABASTER, AL	RPG	BMX	WP9957
BROWNSVILLE	BROWNSVILLE, TX	RPG	BRO	WP9250
CORPUS CHRISTI	CORPUS CHRISTI, TX	RPG	CRP	WP9251
DALLAS/FT WORTH	FORT WORTH, TX	RPG	FWD	WP9259

ATTACHMENT 4 (Continued)

EFFECTIVITY

NEXRAD Site Name	City, ST	EQP	SID	ORG Code
EL PASO	SANTA TERESA, NM	RPG	EPZ	WP9270
HOUSTON	DICKINSON, TX	RPG	HGX	WP9935
JACKSON/BRANDON, MS	JACKSON, MS	RPG	JAN	WP9235
JACKSONVILLE	JACKSONVILLE, FL	RPG	JAX	WP9206
KEY WEST	BOCA CHICA KEY, FL	RPG	EYW	WP9201
KNOXVILLE	MORRISTOWN, TN	RPG	MRX	WP9325
LAKE CHARLES	LAKE CHARLES, LA	RPG	LCH	WP9240
LITTLE ROCK	NORTH LITTLE ROCK, AR	RPG	LZK	WP9340
LUBBOCK	LUBBOCK, TX	RPG	LUB	WP9933
MELBOURNE	MELBOURNE, FL	RPG	MLB	WP9204
MEMPHIS	MEMPHIS, TN	RPG	MEG	WP9334
MIAMI	MIAMI, FL	RPG	MFL	WP9918
MIDLAND/ODESSA	MIDLAND, TX	RPG	MAF	WP9265
MOBILE	MOBILE, AL	RPG	MOB	WP9223
NASHVILLE	OLD HICKORY, TN	RPG	OHX	WP9327
NORMAN	NORMAN, OK	RPG	OUN	WP9921
NORTHEAST ALABAMA	HUNTSVILLE, AL	RPG	HUN	WP9914
SAN ANGELO	SAN ANGELO, TX	RPG	SJT	WP9263

ATTACHMENT 4 (Continued)

EFFECTIVITY

NEXRAD Site Name	City, ST	EQP	SID	ORG Code
SHREVEPORT	SHREVEPORT, LA	RPG	SHV	WP9248
SLIDELL	SLIDELL, LA	RPG	LIX	WP9919
TALLAHASSEE	TALLAHASSEE, FL	RPG	TLH	WP9214
TAMPA	RUSKIN, FL	RPG	TBW	WP9961
WESTERN ARKANSAS	TULSA, OK	RPG	TSA	WP9356
TULSA	TULSA, OK	RPG	TSA	WP9356
	Central Region			
ABERDEEN	ABERDEEN, SD	RPG	ABR	WR9659
BISMARCK	BISMARCK, ND	RPG	BIS	WR9764
CHEYENNE	CHEYENNE, WY	RPG	CYS	WR9564
CHICAGO	ROMEOVILLE, IL	RPG	LOT	WR9969
DENVER	BOULDER, CO	RPG	BOU	WR9469
DES MOINES	JOHNSTON, IA	RPG	DMX	WR9546
DETROIT	WHITE LAKE, MI	RPG	DTX	WR9954
DODGE CITY	DODGE CITY, KS	RPG	DDC	WR9451
DULUTH	DULUTH, MN	RPG	DLH	WR9745
PADUCAH	PADUCAH, KY	RPG	PAH	WR9957

ATTACHMENT 4 (Continued)

EFFECTIVITY

NEXRAD Site Name	City, ST	EQP	SID	ORG Code
EVANSVILLE,IN	PADUCAH, KY	RPG	PAH	WR9957
FARGO/GRAND FORKS	GRAND FORKS, ND	RPG	FGF	WR9750
GOODLAND	GOODLAND, KS	RPG	GLD	WR9465
GRAND ISLAND	HASTINGS, NE	RPG	GID	WR9552
GRAND JUNCTION	GRAND JUNCTION, CO	RPG	GJT	WR9476
GRAND RAPIDS	GRAND RAPIDS, MI	RPG	GRR	WR9635
GREEN BAY	GREEN BAY, WI	RPG	GRB	WR9645
INDIANAPOLIS	INDIANAPOLIS, IN	RPG	IND	WR9438
JACKSON, KY	JACKSON, KY	RPG	JKL	WR9956
LA CROSSE	LA CROSSE, WI	RPG	ARX	WR9643
LINCOLN	LINCOLN, IL	RPG	ILX	WR9436
LOUISVILLE	LOUISVILLE, KY	RPG	LMK	WR9423
MARQUETTE	NEGAUNEE, MI	RPG	MQT	WR9743
MILWAUKEE	DOUSMAN, WI	RPG	MKX	WR9965
MINNEAPOLIS	CHANHASSEN, MN	RPG	MPX	WR9658
NCL MICHIGAN	GAYLORD, MI	RPG	APX	WR9610
NORTH PLATTE	NORTH PLATTE, NE	RPG	LBF	WR9562
NORTHERN INDIANA	NORTH WEBSTER, IN	RPG	IWX	WR9534

ATTACHMENT 4 (Continued)

EFFECTIVITY

NEXRAD Site Name	City, ST	EQP	SID	ORG Code
OMAHA	VALLEY, NE	RPG	OAX	WR9553
PLEASANT HILL	PLEASANT HILL, MO	RPG	EAX	WR9446
PUEBLO	PUEBLO, CO	RPG	PUB	WR9464
QUAD CITIES	DAVENPORT, IA	RPG	DVN	WR9544
RAPID CITY	RAPID CITY, SD	RPG	UNR	WR9662
RIVERTON/LANDER	RIVERTON, WY	RPG	RIW	WR9576
SIOUX FALLS	SIOUX FALLS, SD	RPG	FSD	WR9651
SPRINGFIELD	SPRINGFIELD, MO	RPG	SGF	WR9440
ST LOUIS	WELDON SPRING, MO	RPG	LSX	WR9971
TOPEKA	TOPEKA, KS	RPG	TOP	WR9456
WICHITA	WICHITA, KS	RPG	ICT	WR9450
	Western Region			
BILLINGS	BILLINGS, MT	RPG	BYZ	WT9677
BOISE	BOISE, ID	RPG	BOI	WT9681
SALT LAKE CITY	SALT LAKE CITY, UT	RPG	SLC	WT9932
CEDAR CITY	SALT LAKE CITY, UT	RPG	SLC	WT9932
ELKO	ELKO, NV	RPG	LKN	WT9903

ATTACHMENT 4 (Continued)

EFFECTIVITY

NEXRAD Site Name	City, ST	EQP	SID	ORG Code
EUREKA (BUNKER HILL)	EUREKA, CA	RPG	EKA	WT9594
FLAGSTAFF	BELLEMONT, AZ	RPG	FGZ	WT9375
GLASGOW	GLASGOW, MT	RPG	GGW	WT9768
GREAT FALLS	GREAT FALLS, MT	RPG	TFX	WT9950
LAS VEGAS	LAS VEGAS, NV	RPG	VEF	WT9386
LOS ANGELES	OXNARD, CA	RPG	LOX	WT9295
MEDFORD	MEDFORD, OR	RPG	MFR	WT9597
MISSOULA	MISSOULA, MT	RPG	MSO	WT9773
PENDLETON	PENDLETON, OR	RPG	PDT	WT9688
YUMA	PHOENIX, AZ	RPG	PSR	WT9278
PHOENIX	PHOENIX, AZ	RPG	PSR	WT9278
POCATELLO	POCATELLO, ID	RPG	PIH	WT9578
PORTLAND, OR	PORTLAND, OR	RPG	PQR	WT9698
RENO	RENO, NV	RPG	REV	WT9488
SACRAMENTO	SACRAMENTO, CA	RPG	STO	WT9914
SANTA ANA MTS	SAN DIEGO, CA	RPG	SGX	WT9918
SAN DIEGO	SAN DIEGO, CA	RPG	SGX	WT9918
SAN FRANCISCO	MONTEREY, CA	RPG	MTR	WT9933

ATTACHMENT 4 (Continued)

EFFECTIVITY

NEXRAD Site Name	City, ST	EQP	SID	ORG Code
SAN JOAQUIN VALY	HANFORD, CA	RPG	HNX	WT9389
SEATTLE	SEATTLE, WA	RPG	SEW	WT9922
SPOKANE	SPOKANE, WA	RPG	OTX	WT9785
TUCSON	TUCSON, AZ	RPG	TWC	WT9274
Miscellaneous				
NATL CLIMATIC DATA CTR (NCDC)	ASHEVILLE, NC	RPG	NCCN7	WN9312
NRC #2	KANSAS CITY, MO	RPG	NRCM7	WG9163
NRC #1	KANSAS CITY, MO	RPG	NRCM7	WG9163
NWSHQ TESTBED	SILVER SPRING, MD	RPG		WG9310
WDTB RPG	NORMAN, OK	RPG		WG9410
ROC6 (ORDA Testing)	NORMAN, OK	RPG		WG9410
ROC5 HOTLINE	NORMAN, OK	RPG		WG9410
ROC4 NWS RPG	NORMAN, OK	RPG		WG9410
ROC3 NWS RPG	NORMAN, OK	RPG		WG9410
OSF-3 (RPG/KOHLER GEN)	NORMAN, OK	RPG	OSFO2	WG9410
PRC RPG	RESTON, MD	RPG	PRCV2	WG9310
ROC3 AS NWS REDUNDANT RPG	NORMAN, OK	RPG		

ATTACHMENT 4 (Continued)

EFFECTIVITY

NEXRAD Site Name	City, ST	EQP	SID	ORG Code
ROC4 AS NWS REDUNDANT RPG	NORMAN, OK	RPG		
SHANGHAI, CHINA	SHANGHAI,	RPG		
TAIPEI, TAIWAN	TAIPEI,	RPG		
TRAINING CENTER #2 NWSTC	KANSAS CITY, MO	RPG	TTCM7	WB9612
TRAINING CENTER #1 NWSTC	KANSAS CITY, MO	RPG	TTCM7	WB9612

DoD

ALTUS AFB	FREDERICK, OK	RPG	FDR	FE4419
ANDERSEN AFB	ANDERSEN AFB, GU	RPG	UAM	FE5240
BEALE AFB	OROVILLE, CA	RPG	BBX	FE4686
CAMP HUMPHREYS	CAMP HUMPHREYS, KO	RPG	KSGR4	FI5294
CANNON AFB	FIELD, NM	RPG	FDX	FE4855
COLUMBUS AFB	GREENWOOD SPRINGS, MS	RPG	GWX	FE3022
DOVER AFB	ELLENDALE STATE FOREST, DE	RPG	DOX	FE4497
DYESS AFB	MORAN, TX	RPG	DYX	FE4661
EDWARDS AFB	BORON, CA	RPG	EYX	FE2805
EGLIN AFB	RED BAY, FL	RPG	EVX	FE2823
FT CAMPBELL	TRENTON, KY	RPG	HPX	FY4812

ATTACHMENT 4 (Continued)

EFFECTIVITY

NEXRAD Site Name	City, ST	EQP	SID	ORG Code
FT DRUM	MONTAGUE, NY	RPG	TYX	FY4846
FT HOOD	GRANGER, TX	RPG	GRK	FY4824
FT POLK	FT POLK, LA	RPG	POE	FY4825
FT RUCKER	ECHO, AL	RPG	EOX	FY4805
HOLLOMAN AFB	RUIDOSO, NM	RPG	HDX	FE4801
KADENA AB	KADENA AB, JA	RPG	ODNR5	FH5270
KEESLER AFB OPS TRNG	D'IBERVILLE, MS	RPG	BIX	FE3010
KEESLER AFB MNTC TRNG B	KEESLER AFB, MS	RPG	BIX	FE3010
KEESLER AFB MNTC TRNG A	KEESLER AFB, MS	RPG	BIX	FE3010
KUNSAN AB	KUNSAN AB, KO	RPG	KJKR4	FH5284
LAJES AB	SANTA BARBARA, AZR	RPG	PLAL3	FE4486
LAUGHLIN AFB	BRACKETVILLE, TX	RPG	DFX	FE3099
MAXWELL AFB	CARRVILLE, AL	RPG	MXX	FE3300
MINOT AFB	DEERING, ND	RPG	MBX	FE4528
MOODY AFB	SOUTH STOCKTON, GA	RPG	VAX	FE4830
ROC DOD RPG (KREX)	NORMAN, OK	RPG		WG9420
ROBINS AFB	JEFFERSONVILLE, GA	RPG	JGX	FE2067
ROC DOD RPG (2)	NORMAN, OK	RPG		

ATTACHMENT 4 (Continued)

EFFECTIVITY

NEXRAD Site Name	City, ST	EQP	SID	ORG Code
ROC DOD RPG (3)	NORMAN, OK	RPG		
ROC DOD RPG (RPG1)	NORMAN, OK	RPG		
VANCE AFB	CHEROKEE, OK	RPG	VNX	FE3029
VANDENBERG AFB	ORCUTT, CA	RPG	VBX	FE4610

FAA

ANCHORAGE FAA (RPG 2)	KENAI, AK	RPG	AHG	6901AJ
ANCHORAGE FAA (RPG 1)	KENAI, AK	RPG	AHG	6901AJ
BETHEL FAA (RPG 2)	BETHEL, AK	RPG	ABC	690112
BETHEL FAA (RPG 1)	BETHEL, AK	RPG	ABC	690112
FAA RPG 1 PSF AT OKC	OKC, OK	RPG		
FAA RPG 2 PSF AT OKC	OKC, OK	RPG		
FAIRBANKS FAA (RPG 2)	FAIRBANKS, AK	RPG	APD	690178
FAIRBANKS FAA (RPG 1)	FAIRBANKS, AK	RPG	APD	690178
KAMUELA/KOHALA APT(RPG 2)	KAMUELA, HI	RPG	HKM	699235
KAMUELA/KOHALA APT(RPG 1)	KAMUELA, HI	RPG	HKM	699235
KING SALMON FAA (RPG 2)	KING SALMON, AK	RPG	AKC	690137
KING SALMON FAA (RPG 1)	KING SALMON, AK	RPG	AKC	690137

ATTACHMENT 4 (Continued)

EFFECTIVITY

NEXRAD Site Name	City, ST	EQP	SID	ORG Code
MIDDLETON ISLAND (RPG 2)	MIDDLETON ISLAND, AK	RPG	AIH	690140
MIDDLETON ISLAND (RPG 1)	MIDDLETON ISLAND, AK	RPG	AIH	690140
MOLOKAI FAA (RPG 2)	MOLOKAI, HI	RPG	HMO	699213
MOLOKAI FAA (RPG 1)	MOLOKAI, HI	RPG	HMO	699213
NOME FAA (RPG 2)	NOME, AK	RPG	AEC	690147
NOME FAA (RPG 1)	NOME, AK	RPG	AEC	690147
ROC FAA REDUNDANT (RPG 2)	NORMAN, OK	RPG	CRIO2	WG9410
ROC FAA REDUNDANT (RPG 1)	NORMAN, OK	RPG	CRIO2	WG9410
ROC FAA REDUNDANT (5)	NORMAN, OK	RPG	CRIO2	WG9410
ROC FAA REDUNDANT (4)	NORMAN, OK	RPG	CRIO2	WG9410
ROC FAA REDUNDANT (3)	NORMAN, OK	RPG	CRIO2	WG9410
SAN JUAN FAA (RPG 2)	SAN JUAN, PR	RPG	JUA	69F362
SAN JUAN FAA (RPG 1)	SAN JUAN, PR	RPG	JUA	69F362
SITKA FAA (RPG 2)	BIORKA ISLAND, AK	RPG	ACG	690141
SITKA FAA (RPG 1)	BIORKA ISLAND, AK	RPG	ACG	690141
SOUTH KAUAI FAA (RPG 2)	SOUTH KAUAI, HI	RPG	HKI	699211
SOUTH KAUAI FAA (RPG 1)	SOUTH KAUAI, HI	RPG	HKI	699211
SOUTH SHORE FAA (RPG 2)	NAALEHU, HI	RPG	HWA	699201

ATTACHMENT 4 (Continued)

EFFECTIVITY

NEXRAD Site Name	City, ST	EQP	SID	ORG Code
SOUTH SHORE FAA (RPG 1)	NAALEHU, HI	RPG	HWA	699201

NWS: EHB-6, Modification Note 74
DoD: TO 31P1-4-108-628
FAA: EEM Modification Handbook 6345.1 CHG 56, Chap 51

ATTACHMENT 5

EMBEDDED CONSOLE SERVER MODIFICATION COMPLETION FORM

********** DoD Only will complete and return this form **********
NWS report completion through EMRS
FAA report completion through LEM

Site Name: _____

Site Identifier: _____

Total Time to Complete this Modification Document: _____

Technician's Name(s): _____

Technician's Phone Number: _____

Date Completed: _____

Problem(s) Encountered:

_____

_____

_____

_____

Upon completion of this form, return the information to the ROC using one of the four methods below:

1. Mailing Address: Program Branch, Retrofit Management Team
   WSR-88D Radar Operations Center
   3200 Marshall Ave., Suite 101
   Norman, OK 73072-8028

2. FAX Number: (405) 573-3480
   ATTN: Retrofit Management Team

3. E-mail Address: NEXRAD.Logistics@noaa.gov

4. Web Version: http://www.roc.noaa.gov/ssb/logistics/complete/

Attachment 6 - Sample EMRS Report

A26 Detail Form - ESCM2, SILVER SPRING, MD :: JOHN MERHI - Microsoft Internet Explorer

GENERAL INFORMATION

NEW RECORD | WFO* HUN | Document No.* HUN40521001

1. Open Date	Open Time	2. Op Initials	3. Response Priority	4. Close Date	Close Time
05/21/2004	08:00	WSH	○ Immediate ○ Low ○ Routine ◉ Not Applicable	05/21/2004	10:00

5. Maintenance Description 442 characters left RADAR, WSR-88D

Install Embedded Console Server on Radar Product Generator

EQUIPMENT INFORMATION

6. Station ID*	7. Equipment Code	8. Serial Number	9. TM	10. AT	11. How Mal
HUN	RPG	DC180	M	M	999

Alert: Time Remaining: 2:00 (For Block 12 use only)

12. EQUIPMENT OPERATIONAL STATUS TIMES

a. Fully Operational		Partially Operational				Not Operational			
		b. Logistic Delay		c. All Other		d. Logistic Delay		e. All Other	
Hours	Minutes	Hours	Minutes	Hours	Minutes	Hours	Minutes	Hours	Minutes

13. PARTS USAGE and CONFIGURATION MANAGEMENT REPORTING

ASN	Vendor Part No. (New Part)	Serial Number (Old Part)	Serial Number (New Part)	
				New Row
				Delete Row

14. WORKLOAD INFORMATION

a. Routine		b. Non-Routine		c. Travel		d. Misc		e. Overtime	
Hours	Minutes	Hours	Minutes	Hours	Minutes	Hours	Minutes	Hours	Minutes
						2	0		

MISCELLANEOUS INFORMATION

15. Maintenance Comments 683 characters left

Installed Embedded Console Server on RPG, I.A.W. NEXRAD Mod Note 74

16. Tech Initials BLB

17. SPECIAL PURPOSE REPORTING INFORMATION

a. Mod No.	b. Mod Act/Deact Date	c. Block C	d. Trouble Ticket No.	e. Block E
74	05/21/2004			

Commit A26 | Place on Hold | Copy A26 | New A26 | Cancel

Internet