R400-SP401A
1 NOVEMBER 1991
Supersedes
R400-SP301
1 January 1986

NEXRAD TECHNICAL REQUIREMENTS

(NTR)

Prepared By The NEXRAD Joint System Program Office

R400-SP401A

1 November 1991
Supersedes
1 January 1986
R400-SP301

ISSUE DATES FOR REVISIONS TO NEXRAD TECHNICAL REQUIREMENTS

10 September 1982, R400-SP101 (System Definition Phase)

11 May 1983, R400-SP202 (Validation Phase, Part 1)

15 May 1984, R400A-SP202 (Validation Phase, Part 2)

15 November 1984, R400A-SP203 (Validation Phase, Part 2 Update)

1 January 1986, R400-SP301 (Limited Production Phase)

1 November 1991, R400-SP401A (Full Scale Production Phase)

The following Changes were incorporated in Revision R400-SP401.

9 April 1986, R400-SP301 (Change 1)

2 December 1986, R400-SP301 (Change 2)

24 March 1987, R400-SP301 (Change 3)

1 May 1987, R400-SP301 (Change 4)

1 June 1991, R400-SP401 (Draft)

Single copies available from:

NEXRAD Joint System Program Office (SPO1)
Silver Spring, MD. 20910

This Page Intentionally Left Blank

TABLE OF CONTENTS

Page

1. SCOPE 1-1

2. APPLICABLE DOCUMENTS 2-1
2.1 Government Documents 2-1
2.1.1 Military Standards 2-1
2.1.2 Federal Documents 2-2
2.2 Non-Government Documents 2-2
2.2.1 American National Standards Institute (ANSI) Standards 2-2
2.2.2 Electronic Industries Association (EIA) Documents 2-3
2.2.3 Other Non-Government Documents 2-3
2.3 Precedence of Documents 2-3

3. REQUIREMENTS 3-1
3.1 System Definition 3-1
3.1.1 General Description 3-1
3.1.1.1 System Users 3-1
3.1.1.1.1 Principal Users 3-1
3.1.1.1.2 Other Users 3-2
3.1.1.2 Product Generation 3-2
3.1.1.3 Product Distribution 3-2
3.1.1.3.1 Principal User Product Distribution 3-2
3.1.1.3.2 Other User Products 3-3
3.1.1.4 Principal User Processing and Display 3-3
3.1.1.5 Radar Siting 3-4
3.1.1.6 Support Facilities 3-4
3.1.1.6.1 Maintenance and Supply Depots 3-4
3.1.1.6.2 Maintenance Training Facility 3-4
3.1.1.6.3 Operational Training Facility 3-5
3.1.1.6.4 Operational Support Facility 3-5
3.1.1.7 Functional Areas 3-5
3.1.1.7.1 Radar Data Acquisition 3-7
3.1.1.7.2 Radar Product Generation 3-7
3.1.1.7.3 Principal User Processing 3-7
3.1.1.7.4 Communications 3-7
3.1.1.7.5 Facilities 3-7
3.1.1.7.6 Support 3-8
3.1.2 Missions 3-8
3.1.2.1 Department of Commerce Missions 3-8
3.1.2.2 Department of Defense Missions 3-8
3.1.2.3 Department of Transportation Missions 3-8
3.1.2.4 System Mission 3-8
3.1.3 System Diagrams 3-9
3.1.4 Communications Interfaces 3-9
3.1.5 Government Furnished Property (GFP) List 3-9
3.1.6 Operational and Organizational Concepts 3-16
3.2 System Characteristics 3-16
3.2.1 Performance Characteristics 3-16
3.2.1.1 NEXRAD Unit Full Load 3-16
3.2.1.2 Peak Request Rates 3-18
3.2.1.3 Response Time Requirements 3-18
3.2.1.3.1 Product and Background Map Display 3-20
3.2.1.3.2 Off-Center/Preset Center 3-20
3.2.1.3.3 Resolution Change 3-20
3.2.1.3.4 Display Annotation 3-20

TABLE OF CONTENTS

Page

3.2.1.3.5 Display of Cursor Coordinates 3-21
3.2.1.3.6 Cursor Home 3-21
3.2.1.3.7 Test Pattern Selection/Deselection 3-21
3.2.1.3.8 Status Message Output 3-21
3.2.1.3.9 Alarm/Alert Output 3-21
3.2.1.3.10 Power Fail Recovery 3-21
3.2.1.3.11 Magnification 3-22
3.2.1.3.12 Time Lapse Display 3-22
3.2.1.3.13 Master Cursor Function 3-22
3.2.1.3.14 Hard Copy Generation 3-22
3.2.1.3.15 Startup/Restart 3-22
3.2.1.3.16 Engine Generator On-line 3-23
3.2.1.4 Unit Throughput 3-23
3.2.1.5 Configuration 3-23
3.2.1.5.1 Redundant Configuration 3-23
3.2.1.6 Useful Life 3-25
3.2.1.7 Data Processing Reserve 3-25
3.2.1.8 Expandability 3-25
3.2.2 Physical Characteristics 3-25
3.2.3 Reliability 3-25
3.2.3.1 Hardware Reliability 3-26
3.2.4 Maintainability 3-26
3.2.5 Availability 3-26
3.2.6 Environmental Conditions 3-27
3.2.6.1 Temperature and Humidity 3-27
3.2.6.2 Pressure and Altitude 3-30
3.2.6.3 Solar Radiation 3-30
3.2.6.4 Rainfall 3-31
3.2.6.5 Fungus 3-31
3.2.6.6 Salt Fog 3-31
3.2.6.7 Sand and Dust 3-31
3.2.6.8 Wind 3-31
3.2.6.9 Snow and Ice Load 3-32
3.2.6.10 Lightning 3-32
3.2.6.11 Electromagnetic Compatibility (EMC), Electromagnetic Interference (EMI) and Radio Frequency Interference (RFI) 3-32
3.2.6.11.1 Emissions (Conducted) 3-32
3.2.6.11.2 Emissions (Radiated) 3-33
3.2.6.11.3 Susceptibility (Conducted) 3-33
3.2.6.11.4 Susceptibility (Radiated) 3-33
3.2.6.11.5 Reference Test Data 3-33
3.2.7 Transportability 3-34
3.3 Design and Construction Requirements 3-34
3.3.1 Materials, Processes, and Parts 3-34
3.3.1.1 Trade Practices and Nonspecified processes and Materials 3-34
3.3.1.2 Selection of Electrical and Mechanical Parts 3-34
3.3.1.3 Part Limits and Ratings (Electrical and Mechanical) . . . 3-35
3.3.1.4 Mechanical Design 3-35
3.3.1.5 Equipment Circuit Design 3-35
3.3.2 Electromagnetic Radiation 3-37
3.3.3 Nameplates and Nomenclature 3-37
3.3.4 Workmanship 3-37
3.3.5 Interchangeability 3-37
3.3.6 Safety 3-37

TABLE OF CONTENTS

Page

3.3.7 Human Performance/Human Engineering 3-37
3.3.7.1 Acoustic Noise Requirements 3-37
3.3.7.1.1 Equipment Accessed by Maintenance Personnel Only 3-37
3.3.7.1.2 Equipment in Areas Occupied by Operational Personnel 3-39
3.3.7.1.3 Acoustic Noise Limits 3-39
3.3.7.2 Heating Requirements 3-39
3.3.8 Computer Software 3-40
3.3.8.1 Computer Program Functional Composition. 3-40
3.3.8.1.1 Module Characteristics 3-40
3.3.8.1.2 Module Communication 3-41
3.3.8.2 Design Techniques 3-41
3.3.8.2.1 Structured Design 3-41
3.3.8.2.2 Structured Programming 3-41
3.3.8.3 Documentation Constraints 3-42
3.3.8.4 Coding Convention and Standards 3-43
3.3.8.5 Language Standards 3-44
3.3.8.6 System Software Augmentation 3-45
3.3.8.7 Microprogramming 3-45
3.3.8.8 Microprocessor Software 3-45
3.3.8.9 Program Regeneration 3-46
3.3.9 Firmware 3-46
3.4 Documentation 3-46
3.5 Logistics 3-46
3.5.1 Maintenance 3-46
3.5.1.1 Maintenance Concept 3-46
3.5.1.2 Personnel Skill Level 3-47
3.5.1.3 Diagnostic Techniques 3-47
3.5.1.4 Calibration 3-47
3.5.1.5 Maintenance Environment 3-48
3.5.1.6 Categories of Maintenance 3-48
3.5.1.7 Depot Maintenance 3-48
3.5.1.8 Supportability 3-48
3.5.2 Supply 3-48
3.6 Training 3-48
3.6.1 Limited Production Training 3-49
3.7 Functional Area Characteristics 3-49
3.7.1 Radar Data Acquisition Functional Area 3-49
3.7.1.1 General Requirements 3-49
3.7.1.2 Performance Characteristics 3-50
3.7.1.2.1 Coverage 3-50
3.7.1.2.1.1 Unambiguous Range Coverage 3-50
3.7.1.2.1.2 Velocity Coverage 3-51
3.7.1.2.1.3 Volume Coverage 3-51
3.7.1.2.2 Sample Interval 3-51
3.7.1.2.2.1 Azimuth Sample Interval 3-52
3.7.1.2.2.2 Range Sample interval 3-52
3.7.1.2.3 Accuracy and Precision 3-52
3.7.1.2.3.1 Mean Radial Velocity and Spectrum Width 3-52
3.7.1.2.3.2 Reflectivity 3-53
3.7.1.2.3.3 Range 3-53
3.7.1.2.4 Minimum Detection Capability and Dynamic Range 3-53
3.7.1.3 Antenna Assembly 3-53
3.7.1.3.1 Radome 3-54
3.7.1.3.1.1 Radome Service Conditions 3-55
3.7.1.3.1.2 Radome Radiation Considerations 3-55

TABLE OF CONTENTS

Page

3.7.1.3.2 Pedestal and Antenna 3-55
3.7.1.3.2.1 Pedestal Requirements 3-55
3.7.1.3.2.2 Antenna Mounting 3-55
3.7.1.3.2.3 Antenna Scanning Control 3-55
3.7.1.4 Transmitter 3-56
3.7.1.4.1 Pulse Repetition Frequency 3-56
3.7.1.4.2 Transmitter Maintenance Control and Protection 3-57
3.7.1.4.2.1 Protective Circuitry 3-57
3.7.1.4.2.2 Maintenance Controls 3-57
3.7.1.5 Receiver 3-57
3.7.1.6 Signal Processing Capability 3-58
3.7.1.7 Ground Clutter Suppression 3-58
3.7.1.7.1 Ground Clutter Suppression Requirements 3-58
3.7.1.7.2 Clutter-related Estimate Errors 3-59
3.7.1.8 Control Functions 3-60
3.7.1.8.1 Cold Startup 3-62
3.7.1.8.2 Restart and Warm Startup 3-62
3.7.1.8.3 Control Commands 3-63
3.7.1.9 Monitoring and Error Detection Capability 3-63
3.7.1.10 Display Functions 3-65
3.7.1.11 Calibration 3-65
3.7.1.12 Set-up Mode 3-65
3.7.1.13 Archiving Interface Connections 3-66
3.7.1.1.13.1 Archive II Equipment 3-66
3.7.1.14 Base Data Interface 3-66
3.7.2 Radar Product Generation Functional Area 3-66
3.7.2.1 Product Generation 3-67
3.7.2.1.1 Base Products 3-68
3.7.2.1.2 Derived Products 3-68
3.7.2.1.3 Alphanumeric Products 3-69
3.7.2.1.4 Derived Data Array Products 3-69
3.7.2.2 Product Storage 3-69
3.7.2.3 Product Distribution 3-69
3.7.2.3.1 Distribution to an Associated PUP 3-69
3.7.2.3.2 Distribution to Non-associated PUPs 3-70
3.7.2.3.3 Distribution to FAA ARTCCs 3-70
3.7.2.3.4 Distribution to NWS RFCs 3-70
3.7.2.3.5 Distribution to Other Users 3-70
3.7.2.3.6 Distribution to Principal User External Systems 3-70
3.7.2.4 Operational position Capabilities 3-70
3.7.2.5 Control Capabilities 3-71
3.7.2.5.1 RPG Startup 3-72
3.7.2.5.2 RPG Restart 3-72
3.7.2.5.3 RDA Restart and Warm Startup 3-73
3.7.2.5.4 User Interface Establishment 3-73
3.7.2.5.5 Controlled-Shutdown 3-73
3.7.2.5.6 RDA Mode Control 3-74
3.7.2.5.7 Manual Reconfiguration 3-74
3.7.2.5.8 Archiving Control 3-74
3.7.2.5.9 Product Generation Control 3-74
3.7.2.5.10 Product Storage Control 3-74
3.7.2.5.11 Adaptation Control 3-74
3.7.2.5.12 Backup Power Control 3-75
3.7.2.5.13 Communication Line Configuration 3-75
3.7.2.5.14 Redundant Channel Control 3-75
3.7.2.5.15 Other User Distribution 3-75

TABLE OF CONTENTS

Page

3.7.2.6 Status Monitoring and Error Detection 3-75
3.7.2.7 Archiving 3-76
3.7.2.8 Hydrometeorological Processing 3-76
3.7.2.9 Alert Processing 3-77
3.7.3 Principal User Processing Functional Area 3-77
3.7.3.1 PUP Display and Data Entry 3-78
3.7.3.1.1 Color Graphic Displays 3-78
3.7.3.1.2 Alphanumeric Display 3-79
3.7.3.1.3 Data Entry Devices 3-79
3.7.3.1.3.1 Alphanumeric Input Device 3-79
3.7.3.1.3.2 Programmable Function Selection 3-79
3.7.3.1.3.3 Cursor Control 3-79
3.7.3.1.4 Hard Copy 3-80
3.7.3.2 Product Request 3-80
3.7.3.3 Product Display 3-81
3.7.3.3.1 Product Display Selection 3-81
3.7.3.3.2 Overlay Capability 3-82
3.7.3.3.2.1 Product Overlay Selection 3-82
3.7.3.3.2.2 Background Map Selection 3-82
3.7.3.3.3 Recentering 3-85
3.7.3.3.4 Magnification-and-Resolution Change 3-86
3.7.3.3.5 Time Lapse Display 3-86
3.7.3.3.6 Display Queued Product 3-87
3.7.3.3.7 Alert Notification 3-87
3.7.3.3.7.1 Alert Areas 3-87
3.7.3.3.7.2 Alert Threshold Criteria 3-87
3.7.3.3.7.3 Alert Procedure 3-87
3.7.3.4 Local Product Storage 3-87
3.7.3.5 Product Annotation and Distribution 3-88
3.7.3.5.1 NWS PUP Annotation and Distribution 3-88
3.7.3.5.2 DOD PUP Annotation and Distribution 3-88
3.7.3.5.3 FAA PUP Annotation and Distribution 3-88
3.7.3.6 PUP Control 3-88
3.7.3.6.1 PUP Cold Startup 3-89
3.7.3.6.2 PUP Restart 3-89
3.7.3.6.3 PUP Shutdown 3-90
3.7.3.6.4 Start/Stop Communications 3-90
3.7.3.6.5 Change Adaptation Data 3-90
3.7.3.6.6 PUP Communication Line Configuration 3-90
3.7.3.6.7 Other User Distribution 3-91
3.7.3.7 Status Monitoring 3-91
3.7.3.8 Archiving 3-92
3.7.4 Communications Functional Area 3-92
3.7.4.1 General Modem Characteristics 3-95
3.7.4.2 Communications Links Characteristics 3-96
3.7.4.3 Communications Security 3-96
3.7.4.3.1 Communications Disconnect 3-96
3.7.4.4 Microwave-Line-of-Sight System 3-96
3.7.4.4.1 Microwave Repeaters 3-96
3.7.4.4.2 MLOS Facilities 3-97
3.7.5 Facilities Functional Area 3-97
3.7.5.1 Space 3-98
3.7.5.2 Electrical 3-98
3.7.5.2.1 Power Characteristics 3-98
3.7.5.2.2 Lighting 3-99
3.7.5.2.3 Cables 3-99

TABLE OF CONTENTS

Page

3.7.5.2.4 Electromagnetic Interference Shielding 3-99
3.7.5.2.5 Internal and External Cableways 3-100
3.7.5.2.6 Grounding 3-100
3.7.5.3 Environmental 3-100
3.7.5.3.1 Personnel 3-100
3.7.5.3.2 Equipment 3-100
3.7.5.3.3 Electromagnetic Environment 3-100
3.7.5.4 Architecture 3-101
3.7.5.4.1 Clearances 3-101
3.7.5.4.2 Access 3-101
3.7.5.4.3 Human Factors 3-101
3.7.5.4.4 Telephone/Intercom 3-102
3.7.6 Support Function Area 3-102
3.7.6.1 Maintenance and Logistics Support 3-102
3.7.6.1.1 Depot Operational Equipment 3-102
3.7.6.1.2 Initial-Spares 3-102
3.7.6.1.3 Maintenance Support Equipment 3-102
3.7.6.1.4 Off-Line Diagnostics 3-102
3.7.6.2 Training Support 3-103
3.7.6.2.1 Maintenance Training Support 3-103
3.7.6.2.2 Operational Training Support 3-103
3.7.6.2.2.1 Operational Equipment 3-103
3.7.6.2.2.2 Training Support Equipment 3-103
3.7.6.2.2.3 Operational-Training Software 3-103
3.7.6.3 Development and Test Support 3-103
3.7.6.4 Support Software 3-103
3.7.6.4.1 Adaptation Data Generation 3-104
3.7.6.4.2 Data Maintenance 3-104
3.7.6.4.2.1 Adaptation Data Maintenance 3-104
3.7.6.4.2.2 Geographic Data Maintenance 3-105
3.7.6.4.2.3 Special Symbol Maintenance 3-105
3.7.6.4.3 Software Development and Production 3-105
3.7.6.4.4 System Generation 3-106
3.7.6.4.5 Software Maintenance 3-107
3.7.6.4.6 Computer Performance Monitoring 3-108
3.7.6.4.7 OJT Training Support 3-108
3.7.6.4.8 Test Data Generation 3-108
3.7.6.4.9 Test Software 3-109
3.7.6.4.10 Program Support Library (PSL) 3-109

4. QUALITY ASSURANCE 4-1
4.1. Scope of Test and Evaluation 4-1
4.1.1 Test Phases 4-1
4.1.2 General Test Requirements 4-1
4.1.3 Documentation Requirements 4-2
4.1.3.1 Test Plans 4-3
4.1.3.2 Test Procedures 4-3
4.1.3.3 Test Data Sheets 4-3
4.1.4 Test Results 4-3
4.1.4.1 Test Logs 4-3
4.1.4.2 Test Reports 4-3
4.1.4.3 Other Test Documentation 4-4
4.2 Validation Phase T&E 4-4
4.2.1 Risk Reduction Verification 4-4
4.2.2 Configuration Item Reliability Predictions 4-4
4.2.3 Configuration Item Performance Tests 4-5

TABLE OF CONTENTS

Page

4.2.4 Computer Program Configuration Item Tests 4-5
4.2.5 Functional Tests 4-5
4.2.5.1 Reliability Tests 4-5
4.2.5.2 Performance Tests 4-6
4.2.5.2.1 RDA Performance Tests 4-6
4.2.5.2.2 RPG Performance Tests 4-6
4.2.5.2.3 PUP Performance Tests 4-6
4.2.5.3 Environmental Tests 4-6
4.2.5.4 Human Engineering Tests 4-6
4.2.6 System Tests 4-7
4.2.6.1 Functional Area Interface Tests 4-7
4.2.6.2 Communications Functional Area Tests 4-7
4.2.6.3 System Performance Tests 4-7
4.2.6.4 Maintainability Test and Evaluation 4-7
4.2.6.4.1 Maintainability Prediction 4-7
4.2.6.4.2 Maintainability Testing 4-7
4.3 Limited Production T&E 4-8
4.3.1 Limited Production Configuration Item and Computer Program Configuration Item Tests 4-8
4.3.1.1 Maximum Unexpanded Full Configuration Test 4-8
4.3.1.2 Maximum Full Expansion Configuration Test 4-9
4.3.2 Limited Production Factory Tests 4-9
4.3.3 Limited Production Factory System Tests 4-9
4.3.3.1 Limited Production Model System Performance Tests 4-9
4.3.3.2 Factory Stability test 4-9
4.3.4 Limited Production Installation and Checkout Tests 4-9
4.3.4.1 Equipment Tests 4-10
4.3.4.1.1 Power-Off Tests 4-10
4.3.4.1.2 Power-On Tests 4-10
4.3.4.1.3 Interface Verification Tests 4-10
4.3.4.2 Software Tests 4-10
4.3.4.2.1 Processing Tests 4-10
4.3.4.2.2 Adaptation Data Verification 4-11
4.3.4.3 Limited Production Field System Tests 4-11
4.4 Production Phase T&E 4-11
4.4.1 Full Scale Production Factory Tests 4-11
4.4.2 Full Scale Production Factory System Tests 4-11
4.4.3 Full Scale Production Installation and Checkout Tests 4-12

APPENDIX A A-1

NEXRAD INTERFACE CONTROL DOCUMENT A-1

1. INTRODUCTION A-3
1.1 Purpose A-3
1.2 Scope A-3

2. GENERAL INTERFACE CHARACTERISTICS A-3
2.1 Classes of NEXRAD Communications Lines A-4
2.2 Interface Hierarchy A-4
2.2.1 Physical Layer A-4
2.2.2 Data Link Layer A-4
2.2.3 Network Layer A-4
2.2.4 Transport Layer A-4
2.2.5 Product Data Format Layer A-4

TABLE OF CONTENTS

Page

3. NEXRAD INTERFACE CONTROL SPECIFICATIONS A-4
3.1 Physical Layer A-5
3.1.1 DTE/DCE Interface A-5
3.1.1.1 Signal Characteristics A-5
3.1.1.2 Mechanical Characteristics A-5
3.1.1.3 Data Transmission Circuit Configuration A-5
3.1.2 Communication Line Facility A-6
3.2 Data Link Layer A-7
3.2.1 Access Link for Synchronous Transmission A-7
3.3 Network Layer A-7
3.3.1 Packet Level DTE/DCE Interface A-7
3.3.2 Procedures for Virtual Circuit Service A-7
3.3.3 Packet Format A-7
3.4 Transport Layer A-7
3.4.1 Message Structure A-8
3.4.2 Message Format A-8
3.4.2.1 Product Identification Block A-8
3.4.2.2 End of Product Block A-8
3.5 Product Data Format Layer A-8
3.5.1 Product Definition A-9
3.5.2 Data Categories A-9
3.5.2.1 Alphanumeric A-9
3.5.2.2 Raster Scan A-9
3.5.2.3 Vector Graphic A-9
3.5.2.4 Gridded Data A-9

4. REFERENCED DOCUMENTS A-9
4.1 Federal A-10
4.2 National Communication Systems (NCS) A-10
4.3 American National Standards Institute (ANSI) A-10
4.4 Electronic Industries Association (EIA) A-10
4.5 Consultative Committee for International Telegraph and Telephone A-11
4.6 Federal Coordinator A-11

5. GLOSSARY A-11

APPENDIX B B-1

1. Definition Of Terms B-1
1.1 Adaptation Data B-1
1.2 Alarm B-1
1.3 Alert B-1
1.4 Alphanumeric Products B-1
1.5 Associated PUP and RPG B-1
1.6 Availability (Achieved) - A(a) B-1
1.7 Availability (Inherent) - A(i) B-2
1.8 Base Data B-2
1.9 Base Product B-2
1.10 Catastrophic Failure B-2
1.11 Channel, Dual B-2
1.12 Channel, Single B-2
1.13 Collocated B-3
1.14 Configuration Item (CI) B-3
1.15 Critical Altitude B-3
1.16 Derived Data Array Products B-3

TABLE OF CONTENTS

Page

1.17 Derived Products B-3
1.18 Dwell Time B-3
1.19 Expansion Capability B-3
1.20 Facility B-4
1.21 Failure B-4
1.22 Interface B-5
1.23 Interface Connection B-5
1.24 Line (Lowest) Replaceable Unit (LRU) B-5
1.25 Local Facility B-5
1.26 Local Warning Site B-5
1.27 Maintenance Position B-5
1.28 Maximum Downtime (MDT) B-5
1.29 Mean Time Between Visits (MTBV) B-5
1.30 Mean Time To Repair (NEXRAD Unit) B-6
1.31 Mean Time To Repair (MTTR(CI)) B-6
1.32 Median Gain B-6
1.33 National Facility B-6
1.34 Network Site B-6
1.35 NEXRAD System B-6
1.36 NEXRAD Unit B-6
1.37 Off-The-Shelf B-6
1.38 Operational Facility B-6
1.39 Other User B-7
1.40 Port B-7
1.41 Preview Area B-7
1.42 Principal User B-7
1.43 Principal User Site B-7
1.44 Principal User External System B-7
1.45 Radar Site B-7
1.46 Regional Facility B-7
1.47 Repair Time B-7
1.48 Response Time B-7
1.49 Scan Period B-8
1.50 Site B-8
1.51 Stability Test, 72-Hour B-8
1.52 Startup B-8
1.53 Support Facility B-8
1.54 System Fault B-8
1.55 Throughput Time B-8
1.56 Unit Control Position B-8
1.57 Volume Scan B-8
1.58 Volume Scan Time B-9

APPENDIX C C-1

ALGORITHMS C-1

APPENDIX D D-1

HYDROMETEOROLOGICAL PROCESSING FUNCTIONS D-1

1. Precipitation Detection Function D-2
1.1 Functional Description D-2
1.2 Processing Environment D-2
1.3 Acquisition D-3
1.4 Computation D-3

TABLE OF CONTENTS

Page

1.4.1 Notation D-3
1.4.2 Symbolic Formula D-4
1.5 Distribution D-4
1.6 Definitions. D-5
1.7 Limitations D-6
1.8 Future Developments D-7

2. Rain Gage Data Acquisition Function D-8
2.1 Functional Description D-8
2.2 Processing Environment D-12
2.3 Acquisition D-12
2.4 Data Summary D-13
2.5 Definitions D-13

APPENDIX E E-1

NEXRAD PRODUCTS E-1
1. Reflectivity E-1
2. Mean Radial Velocity E-1
3. Spectrum Width E-1
4. Combined Shear E-1
5. Combined Shear Contour E-2
6. Composite Reflectivity E-2
7. Composite Reflectivity Contour E-2
8. Echo Tops E-3
9. Echo Tops Contour E-3
10. Severe Weather Analysis Display E-3
11. Severe Weather Probability E-4
12. Velocity Azimuth Display Winds E-4
13. Combined Moment E-5
14. Cross-Section E-5
15. Weak Echo Region E-5
16. Storm Relative Mean Radial Velocity E-6
17. Vertically Integrated Liquid (VIL) E-6
18. Storm Tracking Information E-6
19. Hail Index E-7
20. Mesocyclone E-7
21. Tornado Vortex Signature E-7
22. Storm Structure E-7
23. Layer Composite Reflectivity E-8
24. Layer Composite Turbulence E-8
25. User Alert Message E-9
26. Radar Coded Message E-9
27. Free Text-Message E-11
28. Surface Rainfall Accumulation E-11
29. Storm Total Rainfall Accumulation E-11
30. Hourly Digital Precipitation Array E-11
31. Supplemental Precipitation Data E-11

APPENDIX F F-1

ELECTROMAGNETIC ENVIRONMENT F-1

APPENDIX G G-1

ACRONYMS/ABBREVIATIONS G-1

TABLE OF CONTENTS

Page

APPENDIX H H-1

ADAPTATION PARAMETERS H-1
1. Radar Site Latitude/Longitude Coordinate Position: H-3
2. Product Distribution: H-3
3. Product Selection to Map Background Pairing H-3
4. Product to User Display Pairing H-3
5. Product to Color Mix Pairing (per PUP) H-3
6. Function Key Definition H-3
7. Function Key Turn on Setting (per Display) H-3
8. Cursor Home Location (per Display) H-4
9. Preview Area Location (per Display) H-4
10. Cursor Coordinate Output Location (per Display) H-4
11. Data Array(s) Output Location (per Array; per Display) . . . H-4
12. Symbol Size; Character Size; Line Width H-4
13. Blink Rate H-4
14. Inter-character and inter-line spacing of alphanumeric array data H-4
15. Leader Line to Character or Array Spacing H-4
16. Data Type to Line Format Pairing H-4
17. Task Overload Shedding Priority (per Functional Area) H-5
18. Product Overload Shedding Priority (per Functional Area; Interface) H-5
19. Display Preset Center Location (per Display) H-5
20. Overload Warning Threshold (per Overload Type) H-5
21. Overload Warning Display (Minimum Time; Maximum Time Following Overload Recovery) H-5
22. Processor Storage Capacity (On-line) H-5
23. Operational Mode (Initial Setting) H-5
24. Rain Gage Data Acquisition Computer Access Numbers H-6
25. RPG Access Numbers H-6
26. Meteorological Phenomena for Alerts H-6
27. Communication Timeout Periods H-6
28. Alert Areas H-6

APPENDIX I I-1

OPERATIONAL MODES AND SCANNING STRATEGIES I-1
1. OPERATIONAL MODES I-1
2. SCANNING STRATEGIES I-1
3. SELECTION/DESELECTION CRITERIA I-1

APPENDIX J METEOROLOGICAL PHENOMENA FOR ALERTS J-1

a. Grid Group J-1
b. Volume Group J-1
c. Forecast Group J-1

APPENDIX K K-1

RADAR CODED MESSAGE CODE K-1
Header K-1
Part A: Reflectivity K-1
Part B: VAD Winds K-4
Part C: Remarks K-5
End of Message K-8

TABLE OF CONTENTS

Page

Appendix L L-1
This Appendix Intentionally Left Blank. L-1

APPENDIX M M-1

NEXRAD ACCESS ROADS M-1
1. DESCRIPTION M-1
2. PERFORMANCE SPECIFICATION M-1

FIGURES

FIGURE 3-1 FUNCTIONAL AREA OVERVIEW 3-6
FIGURE 3-2 NEXRAD UNITS AND SITES (EXAMPLE) 3-10
FIGURE 3-3 NEXRAD UNIT INTERFACES 3-11
FIGURE 3-4 NEXRAD UNIT OPERATIONAL FUNCTIONAL FLOW DIAGRAM 3-28
FIGURE 3-5 STANDARD NAME PLATE, WS-N-SD001A 3-38
FIGURE 3-6 CLUTTER SUPPRESSION CAPABILITY CHARACTERIZATION FOR LINEAR TIME INVARIANT CLUTTER FILTERING 3-61
FIGURE 3-7 NARROWBAND COMMUNICATIONS CONFIGURATION RESPONSIBILITIES 3-94
FIGURE F-1 2700-2900 MHz ACCUMULATED OMNIDIRECTIONAL AMPLITUDE SCAN. F-4
FIGURE F-2 2900-3100 MHz ACCUMULATED OMNIDIRECTIONAL AMPLITUDE SCAN. F-5
FIGURE F-3 PULSE COUNTS VS FREQUENCY FOR 2700-2900 MHz BAND. F-6
FIGURE F-4 PULSE COUNTS VS FREQUENCY FOR 2900-3100 MHz BAND. F-7
FIGURE K-1 1/16 LIMITED FINE MESH GRID K-2

TABLES

TABLE 3-1 NEXRAD PRINCIPAL USER ORGANIZATION OVERVIEW 3-12
TABLE 3-2 NEXRAD DATA FLOW 3-15
TABLE 3-3 PEAK REQUEST RATES 3-18
TABLE 3-4 SYSTEM RESPONSE TIME REQUIREMENTS 3-19
TABLE 3-5 NEXRAD UNIT CONFIGURATIONS 3-24
TABLE 3-6 KEY OPERATIONAL FUNCTIONS AND SUBFUNCTIONS 3-29
TABLE 3-7 CLUTTER SUPPRESSION REQUIREMENTS FOR MEAN RADIAL VELOCITY AND SPECTRUM WIDTH ESTIMATES 3-59
TABLE 3-8 MAXIMUM ALLOWABLE BIAS IN REFLECTIVITY ESTIMATE DUE TO THE CLUTTER SUPPRESSION DEVICE 3-62
TABLE 3-9 NEXRAD COMMUNICATIONS LINK CHARACTERISTICS 3-93
TABLE A-1 NEXRAD STANDARDS AND CONVENTIONS AT EACH INTERFACE LAYER A-6
TABLE A-2 NEXRAD TRANSMISSION LINE CHARACTERISTICS A-6
TABLE D-1 MINIMAL SCAN MODE REQUIREMENTS NECESSARY FOR DETECTING PRECIPITATION D-7
TABLE D-2 SUMMARY OF INCOMING MESSAGE FORMATS D-9
TABLE D-3 SUMMARY OF VALID PEDTSEP CODES D-10
TABLE D-4 VALID DURATION CODE VARIABLE SPECIFIERS D-11
TABLE E-1 NEXRAD PRODUCTS E-13
TABLE F-1 2700 TO 3100 MHz ENVIRONMENT LIST FOR WHITTIER[a], LOS ANGELES, CA F-2
TABLE H-1 NEXRAD ADAPTATION PARAMETERS H-2

1. SCOPE

This NEXRAD Technical Requirements (NTR) document establishes the performance, design, development and test constraints for the NEXRAD System.* This document follows the format defined by MIL-STD-490 for a Type A specification. Thus, the remaining sections are as follows:

Section 2 - Applicable Documents

Section 3 - Requirements

Section 4 - Quality Assurance

* Defined in Appendix B.

This Page Intentionally Left Blank

2. APPLICABLE DOCUMENTS

This section lists all applicable documents referenced elsewhere in this NTR. Where such references are used, the appropriate section(s) or paragraph(s) of the applicable document is (are) specified.

The following documents, of the issue in effect on the date of the Request for Proposal, form a part of this specification to the extent specified herein. The contractor shall maintain a library of all documents referenced herein and shall make such documents available to Government personnel at the contractor's facility.

2.1 Government Documents

The following military and Federal specifications and standards are available from the sources shown.

2.1.1 Military Standards

MIL-E-4158	General Requirements for Electronic Equipment, Ground
MIL-STD-454	Standard General Requirements for Electronic Equipment
MIL-STD-461	Electromagnetic Emission and Susceptibility Requirements for the Control of Electromagnetic Interference
MIL-STD-462	Electromagnetic Interference Characteristics, Measurement of
MIL-STD-469	Radar Engineering Design Requirements, Electromagnetic Compatibility
MIL-STD-471A	Maintainability Demonstration/Verification
MIL-STD-781	Reliability Design Qualification and Production Acceptance Tests: Exponential Distribution
MIL-STD-810	Environmental Test Methods
MIL-STD-1472	Human Engineering Design Criteria for Military Systems, Equipment, and Facilities
MIL-STD-1130	Connections, Electrical, Solderless, Wrapped
MIL-STD-188-124A	Grounding, Bonding, and Shielding
MIL-HDBK-217	Reliability Predictions of Electronic Equipment
MIL-HDBK-419	Grounding, Bonding, and Shielding
AFR-66-1	Maintenance Management

Source: Commanding Officer
U. S. Naval Supply Center
(Code DC-1) 5801 Tabor Avenue
Philadelphia, PA. 19120

2.1.2 Federal Documents

FED-STD-595A Colors

OSHA-29 CFR 1910 OSHA Safety and Health Standards

Source: Superintendent of Documents
U.S. Government Printing Office
Washington, DC 20402

NWS Transient Susceptibility Standard May 1978)

National Weather Service Operations Manual

Source: National Weather Service
1325 East-West Highway
Silver Spring, MD 20910

AC 70/7460-IF FAA Advisory Circular, Obstruction Marking and Lighting

DOT/FAA Order 6000.27 Transmittal of Maintenance Philosophy Steering Group Report

Source: Federal Aviation Administration
Washington, DC 20591

Manual of Regulations and Procedures for Federal Radio Frequency Management, National Telecommunications and Information Administration

R400-AR301 NEXRAD Algorithm Report

R400-IN401 NEXRAD Interface Control Document

Source: NEXRAD System Program Office (SPO1), Logistics Branch
1325 East-West Highway
Silver Spring, MD 20910

PUP Site Survey Instructions and Information Package. Rev. 4.

Source: NEXRAD System Program Office (SPO1), Facilities Branch
1325 East-West Highway
Silver Spring, MD 20910

2.2 Non-Government Documents

The following non-Government documents are available from the sources shown.

2.2.1 American National Standards Institute (ANSI) Standards

ANSI x3.4 American Standard Code for Information Interchange

ANSI C95.1-1982 Safety Levels With Respect to Human Exposure to Radio Frequency Electromagnetic Fields, 300 KHz to 100 GHz

Source: ANSI, Inc.
1430 Broadway
New York, NY 10018

2.2.2 Electronic Industries Association (EIA) Documents

EIA-195-C	Electrical and Mechanical Characteristics for Terrestrial Microwave Relay System Antennas and Passive Reflectors
RS-222-C	Structural Standards for Steel Antenna Towers and Antenna Supporting Structures
RS-449	General Purpose 37 Position and 9 Position Interface for Data Circuit-Terminating Equipment Employing Serial Binary Data
	Filtering, Electronic Equipment, Bulletin No. 9

Source: EIA
Engineering Department
2001 Eye Street, NW
Washington, DC 20006

2.2.3 Other Non-Government Documents

NFPA No. 70-1971 National Electrical Code

Source: National Fire Protection Association
Batterymarch Park
Quincy, MA 02269

IEEE 200-75 Reference Designations for Electrical and Electronic Parts and Equipment

Source: IEEE Service Center
445 Hoes Lane
Piscataway, NJ 08854

ASTM Standards

Source: American Society for Testing Materials
1916 Race Street
Philadelphia, PA 19103

CCITT Consultative Committee for International Telegraph and Telephone

Source: Omnicon, Inc.
115 Park St, S.E.
Vienna, VA 22180

2.3 Precedence of Documents

An attempt has been made to prevent conflicts between this NTR and the referenced documents. However, in the event of a conflict between requirements, the following order of precedence (highest=1) shall apply:

1. NTR
2. Military Standards
3. Federal Standards

4. ANSI Standards

5. EIA Standards

6. Other

3. REQUIREMENTS

This section delineates the performance and design requirements for the NEXRAD System. Throughout this document many performance requirements are stated as integer numbers. A minimum precision of 2 decimal places is assumed for all performance requirements given as an integer.

3.1 System Definition

The NEXRAD System comprises Doppler radars, communications, data processing hardware and software, display and data entry equipment, documentation, and certain facilities and support capabilities required to detect, process, distribute, and display weather information in a manner which allows the Department of Commerce (DOC), the Department of Defense (DOD) and the Department of Transportation (DOT) to fulfill their mission needs.

3.1.1 General Description

A general description of the NEXRAD System and its functions is provided in the following paragraphs.

3.1.1.1 System Users

The system users include both principal users* and other users.*

3.1.1.1.1 Principal Users

The principal users of the NEXRAD System are operationally oriented agencies within the participating departments (DOC, DOD, and DOT) which use weather radar information to perform or support their activities. These activities include warning of hazardous weather and flash flood prediction, predicting weather conditions, ensuring safety of flight, protecting base resources, and planning military missions.

Within DOC, the National Weather Service (NWS), a component of the National Oceanic and Atmospheric Administration (NOAA), is the Federal Government's principal civilian meteorological agency. As such, it requires weather radar information to fulfill its assigned responsibilities. This information is required at Weather Service Forecast Offices (WSFOs), Weather Service Offices (WSOs), River Forecast Centers (RFCs), the National Meteorological Center (NMC), the Hurricane Centers (HCs), and the National Severe Storms Forecast Center (NSSFC).

In the case of DOD, the Air Force's Air Weather Service (AWS) is the principal user agency which provides meteorological services to the Air Force, the Army, and certain other DOD elements. The Navy's Naval Oceanography Command (NOC) is the principal meteorological agency which supports the Navy, Marine Corps, and other elements of DOD. AWS requires weather radar information at its Base Weather Stations (BWSs) and at the Air Force Global Weather Central (AFGWC). NOC requires weather radar information at its Naval Oceanography Command Detachments (NOCDs).

In the case of DOT, the Federal Aviation Administration (FAA), as the principal civilian agency for ensuring air traffic safety, requires weather radar information. This information is required at Air Route

---

* Defined in Appendix B.

Traffic Control Centers (ARTCCs), Terminal Radar Control facilities (TRACONs), airport towers, Flight Service Stations (FSSs), and the FAA's System Command Center (SCC).

3.1.1.1.2 Other Users

Other users of the NEXRAD System include Federal Government agencies other than the principal users; state and local government agencies; and private sector users such as airline companies, consulting meteorologists, the media, and university laboratories. (Selected weather radar information will be made available to these users according to policy established by NWS.)

3.1.1.2 Product Generation

To support the common needs of the principal and other users for weather radar information, the NEXRAD System will generate products which can be used for distribution and presentation to operational personnel. These include base products,* derived products,* alphanumeric products,* and derived data array products.*

The base products consist of reflectivity, mean radial velocity, and radial velocity spectrum width (standard deviation) estimates presented in a format suitable for display on a color graphic display. The derived products provide processed radar data, concentrated to provide large volumes and varieties of data in a form suitable for display on color graphic displays and, to the extent possible, requiring minimum interpretive effort. The alphanumeric products provide processed radar data for users without a graphic display capability. The derived data array products provide data in a nondisplayable format for transmission to systems external to the NEXRAD System for further processing.

Product generation will be automated to the extent feasible. However, at selected sites, an interactive display and data entry capability will be available for human analysis of radar data and assistance in the generation of certain radar products.

The Radar Product Generation (RPG) function will, where feasible, be collocated with both a radar (antenna) site* and one principal user site.*

3.1.1.3 Product Distribution

The NEXRAD System will distribute products to the operational facilities* of the principal users and have an access capability so that other users can obtain selected products.

3.1.1.3.1 Principal User Product Distribution

In the case of NWS, operational personnel at local facilities* (WSFOs and WSOs) will automatically be provided products from a preselected (usually collocated) RPG. Certain WSFOs may also regularly be provided products from one or more additional preselected RPGs since their geographic area of responsibility is usually larger than for WSOs. WSFOs and WSOs may choose products from the preselected RPG(s) for regular receipt or on-demand call-up, subject only to their communications bandwidth limitations. In addition, WSFOs and WSOs will be able to obtain a limited number of products from any other RPG in the

* Defined in Appendix B.

conterminous United States on a request basis.

In the case of NWS, regional facilities* and national facilities* will be provided selected products based on their needs. For each RFC, precipitation related products will be made available from each RPG within its area of responsibility. Each RFC may choose products from any RPG within its area of responsibility via dial-up requests.** For the NWS national centers (NMC, the HCs, and NSSFC), relatively low resolution products will be routinely made available from each relevant RPG. In addition, the national centers will be able to request higher resolution products from any RPG within the conterminous United States when needed.

In the case of DOD, operational personnel at BWSs and NOCDs will automatically be provided products from a preselected RPG. In the case of certain BWSs, the radar will be situated on or near the base itself. The BWSs and NOCDs may choose any product from the preselected RPG for regular receipt or on-demand call-up, subject only to their communications bandwidth limitations. In addition, BWSs and NOCDs will be able to obtain a limited number of products from any other RPG on a request basis.

The only DOD national facility which requires products is AFGWC. (DOD has no applicable regional facilities.) It, like the NWS national centers, will routinely have available low resolution products and will be able to request more detailed products from any RPG.

In the case of the FAA, the NEXRAD System will provide products to all ARTCCs. The Center Weather Service Unit (CWSU) in each ARTCC will be provided with products from every RPG within, or with extensive radar coverage within, its area boundary. (However, the further processing of the data received at the CWSU and its distribution to controllers within the ARTCC and to personnel at other FAA operational facilities will be the responsibility of the FAA and will not be a part of this acquisition.) If a NEXRAD radar is sited near an airport/terminal, base data* will be sent directly to the TRACON in cases where this approach is selected by the FAA. In the event an RDA is situated near an airport and the RPG is remote from the RDA, the TRACON may interface directly with the RDA. In addition, the NEXRAD System will provide the capability for FAA operational facilities to obtain a limited number of products from any other RPG in the conterminous United States on a request basis.

3.1.1.3.2 Other User Products

Other users will have access to selected products, according to policy to be established by NWS, although no equipment or communications facilities will be provided in the NEXRAD System for their support, except for interface ports and modems to permit access to products.

3.1.1.4 Principal User Processing and Display

Each of the principal users of the NEXRAD System will require a processing and display capability at operational facilities. This capability will be used by operational personnel for the selection,

---

* Defined in Appendix B.

** In order to calibrate rainfall rates, NEXRAD will automatically request and receive data from Rain Gage Data Acquisition Computers (RGDAC).

analysis, and further annotation and distribution of products generated at an RPG.

For NWS, AWS, and NOC, user processing and display capabilities will be a part of this acquisition. The FAA, however, may acquire its own user processing and display capability outside the scope of this acquisition.

For each of the principal users, the processing and display capabilities will support the routine display of selected current products, the call-up of other products (both current and earlier versions), the annotation of products and their further distribution to the principal user external systems,* and the archiving of selected products.

3.1.1.5 Radar Siting

The NEXRAD radar (antenna) sites will be specified by the Government to meet the area and point coverage requirements of the principal users. These sites will be within the conterminous United States; in Alaska, Hawaii, and Puerto Rico; and at selected overseas locations. A number of these sites are expected to be in the vicinity of selected airports to provide airport and terminal coverage.

Whenever feasible, a radar site will be collocated with a principal user site. NEXRAD network sites* will normally be collocated with an NWS operational facility, such as a WSFO. NEXRAD local warning sites* will normally be collocated with or near an operational facility of the applicable department. (In this document, the term "local warning" does not refer to the WSR-74C or other similar radars operated by NWS which may elsewhere be referred to as "local warning" radars.)

3.1.1.6 Support Facilities

The NEXRAD system will include support facilities* to assure satisfactory equipment operation and depot maintenance; provide training for operational and maintenance personnel; and support development, test, and evaluation activities.

3.1.1.6.1 Maintenance and Supply Depots

A centralized maintenance and supply depot will support all NEXRAD equipment. This depot will be at a location selected by the Government. Depot activities may be performed by either contractor or Government personnel, based on life-cycle cost considerations.

The maintenance and supply depot will contain one NEXRAD Unit*, including radar, data processing, and display and data entry equipment configured as at an operational site. In addition, other support hardware and software required for the maintenance function, related documentation, spare parts, and consumable supplies will be located at the depot.

3.1.1.6.2 Maintenance Training Facility

NEXRAD maintenance training facilities will be located at two existing principal user's training sites. Each facility will contain NEXRAD equipment, including radar, data processing, and display and data entry hardware, and appropriate test software, dedicated to the hardware

* Defined in Appendix B.

maintenance training function.

3.1.1.6.3 Operational Training Facility

NEXRAD system operational training facilities will be located at existing principal users' training sites. Each training facility will be provided the equipment necessary for operational training including a data playback capability.

3.1.1.6.4 Operational Support Facility

An Operational Support Facility (OSF) will be established at Norman, Oklahoma to provide support to the NEXRAD System. This facility will support test and evaluation activities and will be a site for training the initial cadre of agency personnel.

To support test and evaluation activities, the OSF will include data recording, data playback, and data analysis capabilities, some parts of which may use Government Furnished Property (GFP). Radar data sets, recorded in climatologically different geographical areas and under different meteorological conditions, will also be provided by the Government to the OSF to support test and evaluation of the data processing, distribution, and display portions of the NEXRAD System.

To support maintenance, enhancement, and distribution of the NEXRAD System operational software after an Initial Operating Capability (IOC) has been achieved, support software (such as assemblers, compilers, operating systems, test aids, and adaptation data generation software) shall be supplied. Support hardware (such as simulation equipment, data storage devices, and printers) shall also be supplied to support the software maintenance and enhancement functions.

The establishment of the OSF will be preceded by the operation of an Initial Operational Test Facility (IOTF) that will be used for development activities prior to the availability of the first article (NEXRAD Unit) hardware and software. The IOTF will be used for testing and validation of meteorological algorithms.

3.1.1.7 Functional Areas

The NEXRAD System technical requirements have been defined in terms of the following functional areas:

1. Radar Data Acquisition
2. Radar Product Generation
3. Principal User Processing
4. Communications
5. Facilities
6. Support

An overview of the NEXRAD System functional areas, together with an identification of the functions of each area, is provided in Figure 3-1. Functional area requirements are presented in more detail in Section 3.7 of this document.

RADAR DATA ACQUISITION	RADAR PRODUCT GENERATION	PRINCIPAL USER PROCESSOR
• ANTENNA CONTROL • TRANSMIT • RECEIVE • SIGNAL PROCESSING • GROUND CLUTTER SUPPRESSION • CONTROL • MONITORING AND ERROR DETECTION • DISPLAY • CALIBRATION • ARCHIVING	• PRODUCT GENERATION • PRODUCT STORAGE • PRODUCT DISTRIBUTION • DISPLAY AND DATA ENTRY CONTROL • STATUS MONITORING AND ERROR DETECTION • ARCHIVING • HYDROMETEOROLOGICAL PROCESSING	• DISPLAY AND DATA ENTRY • PRODUCT REQUEST • PRODUCT DISPLAY • LOCAL PRODUCT STORAGE • PRODUCT ANNOTATION AND DISTRIBUTION • CONTROL • STATUS MONITORING • ARCHIVING
COMMUNICATIONS	**FACILITIES**	**SUPPORT**
• WIDEBAND DATA COMMUNICATIONS • NARROWBAND DATA COMMUNICATIONS	• BUILDING • TOWERS • REAL PROPERTY INSTALLED EQUIPMENT (RPIE) • ACCESS ROADS	• MAINTENANCE DEPOT EQUIPMENT • SPARES • MAINTENANCE SUPPORT EQUIPMENT • DIAGNOSTICS • MAINTENANCE TRAINING SUPPORT • OPERATIONAL TRAINING SUPPORT • DEVELOPMENT AND TEST EQUIPMENT (OPERATIONAL) • SUPPORT SOFTWARE

FIGURE 3-1 FUNCTIONAL AREA OVERVIEW

It is the Government's objective to encourage innovation in meeting the stated requirements. Accordingly, the contractor may select a system design that allocates functions to equipment items and computer programs in a manner different than implied by the functional area breakdown, provided all of the system requirements are met. Specifically, the contractor should not draw any conclusions, unless explicitly stated, regarding the relationship between a physical location (site) and the requirements of an individual functional area.

3.1.1.7.1 Radar Data Acquisition

The Radar Data Acquisition (RDA) functional area includes the Doppler radars which are located at the radar sites. This functional area also includes hardware and software required to perform the signal processing, clutter suppression, control, monitoring and error detection, display, calibration, and archiving functions related to radar operation.

3.1.1.7.2 Radar Product Generation

The Radar Product Generation (RPG) functional area includes all hardware and software required for real time generation, storage, and distribution of products for operational use. It also includes hardware and software required for control, status monitoring and error detection, archiving, and hydrometeorological processing. To the extent required, this functional area includes display and data entry hardware and software provided for human participation in the generation of the products.

3.1.1.7.3 Principal User Processing

The Principal User Processing (PUP) functional area includes all hardware and software required for the request, display, local storage, and local annotation and distribution of products by operational personnel (such as meteorologists and forecasters) of the principal user agencies. It also includes the hardware and software required for local control, status monitoring, and archiving.

3.1.1.7.4 Communications

The Communications functional area includes the hardware and software required at NEXRAD sites to transmit and receive weather radar data via dedicated or dial-up narrowband links.

It also includes any hardware and software, including communications equipment, needed for wideband links that may be required for transmission of data between noncollocated radar sites and principal user sites.

3.1.1.7.5 Facilities

The Facilities functional area includes construction and modification of buildings, construction of towers, provision and installation of Real Property Installed Equipment (RPIE) such as power generation and air conditioning equipment, and construction of access roads which are needed in support of the RDA, RPG, PUP, Communications, and Support functional areas.

3.1.1.7.6 Support

The Support functional area includes logistics, training, development and test, and support software functions. For logistics, the Support functional area includes maintenance depot equipment, spares, maintenance support equipment, and diagnostics. For training, it includes support for both maintenance and operational training. For development and test, it includes operational equipment for the OSF. For support software, it includes capabilities required for the development, test, maintenance, enhancement, and distribution of the operational software.

3.1.2 Missions

DOC, DOD, and DOT have major weather related missions and responsibilities that require weather radar information.

3.1.2.1 Department of Commerce Missions

DOC, through the National Weather Service (NWS), is the principal civilian meteorological agency of the Federal Government. Specifically, DO is responsible for detection of hazardous weather such as severe thunderstorms, tornadoes, excessive rainfalls, and winter weather events; and warning the public. It is also responsible for providing essential weather information to other activities such as civilian aviation, marine, agricultural and forestry operations, and the entire river and flood prediction program. DOC operates many weather radars and uses information from some radars operated by DOD and DOT to meet these responsibilities.

3.1.2.2 Department of Defense Missions

Within DOD, the Air Force's Air Weather Service (AWS) provides worldwide meteorological and aerospace environmental services to the Air Force, Army, and certain other DOD elements; the Naval Oceanography Command (NOC) supports the Navy, Marine Corps, and some other elements of DOD. These organizations are responsible for providing and relaying severe weather warnings for the protection of DOD resources and personnel, providing weather information to aid the decision making process at specific locations, and supporting military aviation. To meet these responsibilities, DOD operates weather radars in the United States and overseas and uses information from these and from DOC and DOT radars in the conterminous United States.

3.1.2.3 Department of Transportation Missions

DOT, through its Federal Aviation Administration (FAA), is responsible for the safe and efficient utilization of United States airspace. In meeting these responsibilities, the FAA provides information on the location and intensity of potentially hazardous weather conditions to pilots and others concerned with aviation. In recent years, there has been an increased emphasis on providing real time hazardous weather information. DOT has no weather radars and presently obtains its information from its own air traffic control radars (not designed for weather detection) and from NWS radars via remote displays, other NWS products, and NWS personnel located at FAA facilities.

3.1.2.4 System Mission

The mission of the NEXRAD System is the acquisition, processing, and

distribution of weather radar information to aid in reducing loss of life, injuries, and damage to property. The radar system addresses the common need among the three Federal departments (DOC, DOD, and DOT) for information on the present location, severity, and movement of weather phenomena, both routine and hazardous (including tornadoes, severe thunderstorms, heavy precipitation, tropical cyclones, hail, high winds, and severe turbulence) throughout the United States and at selected overseas locations. The NEXRAD System will also provide routine information useful for monitoring and assessing general weather conditions such as rainfall amounts and distribution.

3.1.3 System Diagrams

In addition to the functional area overview (Figure 3-1) already presented, the following diagrams are also presented:

1. Figure 3-2 is an example of three possible NEXRAD Unit configurations. Configuration 1 consists of RDA 1, RPG 1 and its operational position (RPGOP 1), and associated PUPs* 1A and 1B. Configuration 2 consists of RDA 2, RPG 2, and its RPGOP 2, and associated PUPs 2A and 2B. Configuration 3 consists of RDA 3, RPG 3, and associated PUPS 3A and 3B. The boxes designated as sites represent distinct geographic locations. Thus RDA 1, RPG 1, RPGOP 1, and PUP 2A are collocated. That is, in this example, all of the equipment needed to perform their functions is located at one WSFO. Sites C and D, although both associated PUPs of Unit 1, are not collocated with any other equipment of Unit 1. Similarly, although PUP 2A is associated with NEXRAD Unit 2, it is collocated with Unit 1 equipment at the WSFO. This is an example where one principal user site normally receives data from two different radar sites. This example also depicts the situation (Configuration 2) where the radar site is not collocated with equipment needed to perform RPG functions. Configuration 3 is an example where the RDA and RPG are collocated at a radar site without a collocated associated PUP; however, in this case, the RPG control capability will be at one of the associated PUPs.

2. Figure 3-3 depicts the interfaces of a NEXRAD Unit, both with other NEXRAD Units and with non-NEXRAD systems.

3. Table 3-1 presents a principal user organization overview.

3.1.4 Communications Interfaces

This section describes the data flow for the communications interfaces of the NEXRAD System. The NEXRAD System shall include a digital communications capability to send products to principal and other users using dedicated or dial-up phone lines. Communications interface requirements for a NEXRAD Unit are summarized in Table 3-2 for intra-unit, inter-unit, and external communication.

3.1.5 Government Furnished Property (GFP) List

Government furnished algorithms will be supplied to the contractor. Additional GFP will include selected facilities, selected power and air conditioning equipment, narrowband communications, selected voice

---

* Defined in Appendix B.

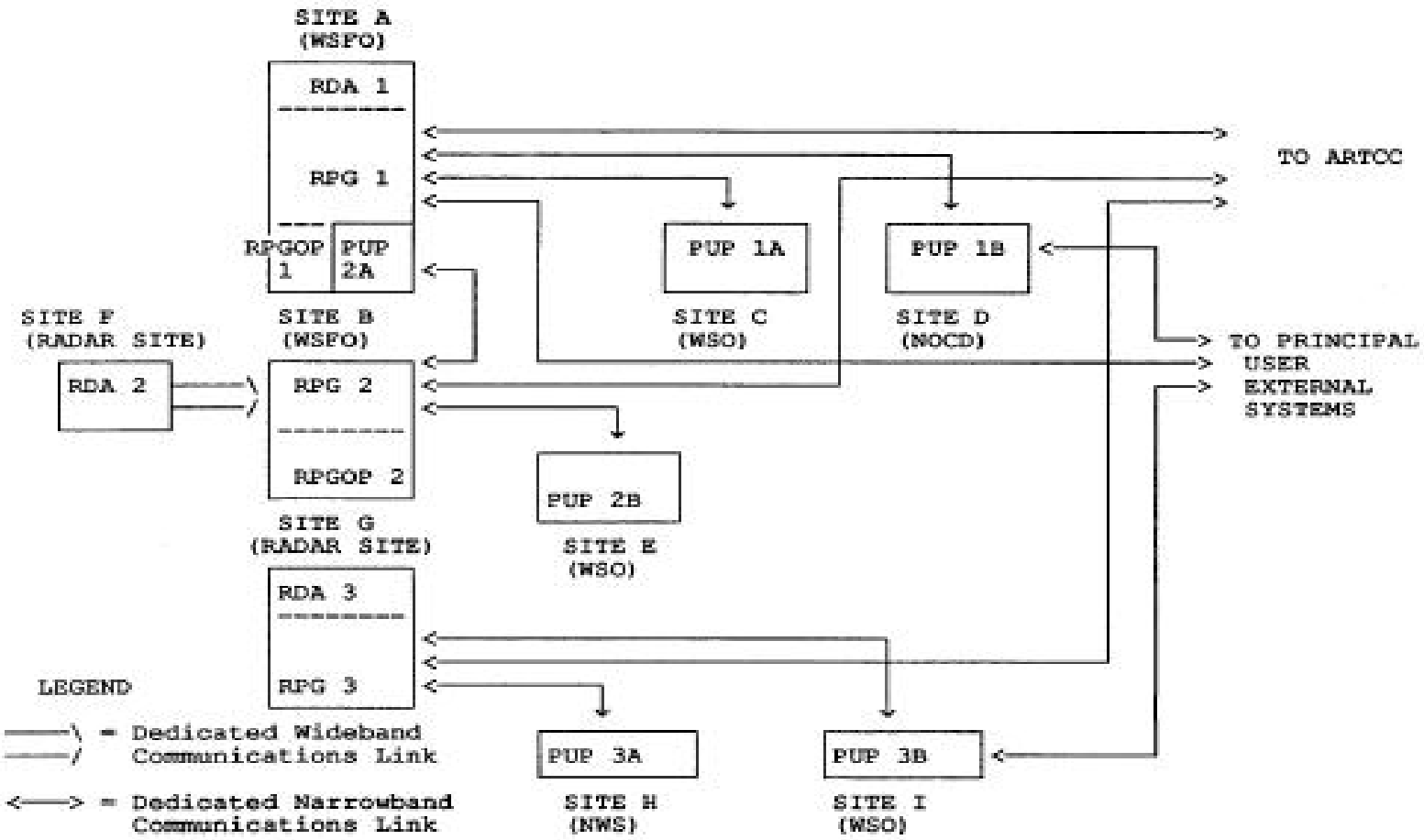

FIGURE 3-2 NEXRAD UNITS AND SITES (EXAMPLE)

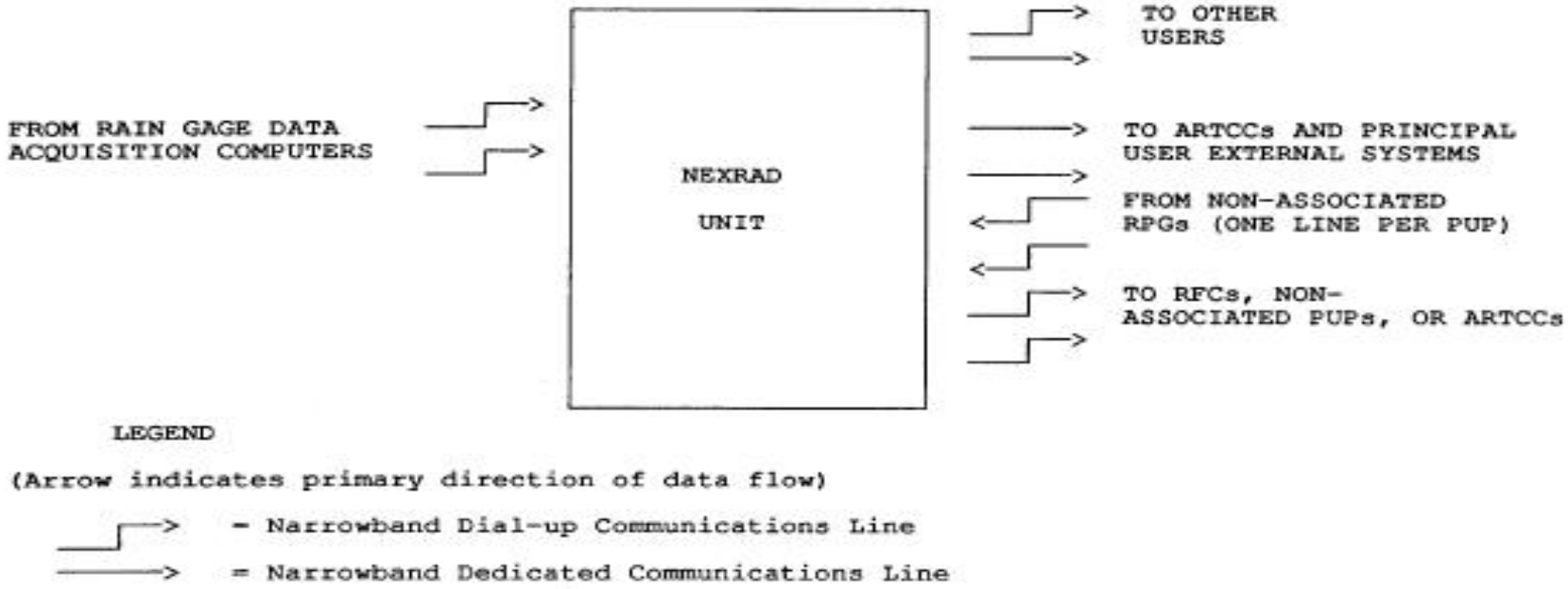

FIGURE 3-3 NEXRAD UNIT INTERFACES

TABLE 3-1 NEXRAD PRINCIPAL USER ORGANIZATION OVERVIEW

FACILITY	RELEVANT RESPONSIBILITY	NEED FOR/USE OF NEXRAD INFORMATION
NWS		
. NMC	. Issue weather analysis and forecast guidance.	. Overview information for generation of radar summary products; detailed rainfall information; and high resolution data for mesoscale models.
. NSSFC	. Issue severe convective storm and tornado watches.	. Low resolution information in storm areas.
. HCs	. Issue hurricane watches and warnings.	. Low resolution information in hurricane areas.
. RFCs	. Derive flood forecasts.	. High resolution area/ precipitation estimates covering river basins.
. WSFOs/WSOs	. issue severe weather, flood, and flash flood warnings for local area.	. High resolution information on hazardous weather in or approaching local area.

Note: "High" and "low" resolution relate to degree of resolution provided by radar products, and may differ from that used in another context.

TABLE 3-1
(continued)

FACILITY	RELEVANT RESPONSIBILITY	NEED FOR/USE OF NEXRAD INFORMATION
DOD		
. BWSs	. Issue weather warnings and advisories for AF base area.	. High resolution information on hazardous weather in or approaching base area.
. AFGWC	. Issue weather warnings and advisories where no BWS operating.	. High resolution information on hazardous weather where no BWS operating; low resolution overview information elsewhere.
. NOCDs	. Relay weather warnings and advisories in Navy base/station area.	. High resolution information on hazardous weather in or approaching base area.
FAA		
. ARTCCs/ CWSUs	. Disseminate hazardous weather information internally and to other FAA users (e.g., ARTCC, TRACON, and Tower) in ARTCC area of responsibility.	. High resolution on hazardous weather in or approaching ARTCC area of responsibility.
. SCC	. Interface with each ARTCC to establish air traffic flow patterns, enhance flight safety, and minimize delays.	. Low resolution overview information on a national basis.

TABLE 3-1
(continued)

FACILITY	RELEVANT RESPONSIBILITY	NEED FOR/USE OF NEXRAD INFORMATION
FAA (concluded)		
. FSSs*	. Provide hazardous weather information within air-to-ground coverage area; provide Enroute Flight Advisory Service for area of responsibility (if applicable); provide preflight briefings on a national basis.	. High resolution information on hazardous weather in or approaching FSS area of responsibility; low resolution information on a national basis.
. TRACONs**.	Provide hazardous weather information to controllers and pilots.	. High resolution current information on hazardous weather in terminal airspace (e.g., gust fronts, down drafts, wind shear, and turbulence), especially on final approach and take-off.

* Normally, it is anticipated that an FSS will receive NEXRAD information via the applicable ARTCC; however, in some cases an FSS may include a PUP and receive products directly from an RPG.

** When radar site located near center of airport/terminal.

TABLE 3-2 NEXRAD DATA FLOW

1. INTRA-UNIT

From \ To	RDA	RPG	PUP*
RDA	-	B,S	-
RPG	C	S**,C**	P,S
PUP*	-	S,C, R	-

2. INTER-UNIT

From (Unit X) \ To (Unit Y)	RDA_Y	RPG_Y	PUP_Y*
RDA_X	-	-	-
RPG_X	-	P,S,R	P,S
PUP_X	-	R	-

3. EXTERNAL

From \ To	RDA	RPG	PUP	ARTCC	TRA-CON	RFC	OTHER USER	PUES	RGDAC	MON-ITOR
RDA	(1)	(1)	(1)	B	B	-	-	-	-	-
RPG	(1)	(1)	(1)	B,P,S	B	P,S	P,S	P,S	R,S,H	P
PUP	(1)	(1)	(1)	-	-	-	P,S	P,S	-	P
ARTCC	-	S,C,R	-	-	-	-	-	-	-	-
TRACON	-	-	-	-	-	-	-	-	-	-
RFC	-	R	-	-	-	-	-	-	-	-
OTHER	-	R	R	-	-	-	-	-	-	-
PUES	-	R	R	-	-	-	-	-	-	-
RGDAC	-	H,R	-	-	-	-	-	-	-	-
MONITOR	-	-	-	-	-	-	-	-	-	-

LEGEND

- = No Direct Communication
B = Base Data
P = Products
S = Status
C = Control
H = Hydrologic Data and Precipitation Status
R = Product or Status Request

(1) Covered by "INTRA-UNIT"
* Refers to any PUP in the indicated unit.
** Applicable only when the unit control position is remote from the RPG.

communications (the contractor will provide all voice communications necessary for safe operation and maintenance of the system), selected documentation and models, and selected test data.

3.1.6 Operational and Organizational Concepts

The NEXRAD System is expected to provide real-time information on the location, intensity, and movement of both routine and hazardous weather phenomena. These phenomena, although not mutually exclusive, are: precipitation, wind and wind shear, tornadoes, fronts and fine lines, tropical cyclones, mesocyclones, thunderstorms, turbulence, icing conditions, hail, and freezing/melting level.

To meet the minimum objectives of the principal users, the NEXRAD System must acquire, process, and display data in a readily interpretable fashion. Although the NEXRAD System is intended to be a stand-alone system, it must also interface with certain existing principal user display and communications systems. This will be accomplished by providing a standard set of products over a standard communications interface.

The Government will select the geographical locations for all radar sites and principal user sites. Where feasible the equipment needed to perform the RDA and RPG functions of a NEXRAD Unit will be collocated with the equipment needed to perform the PUP functions at one of the principal user sites. These sites will be in all fifty states, Puerto Rico, and at selected overseas locations. In addition to radar sites and principal user sites, the Government will also select sites in the conterminous United States for maintenance, training, and continuing R&D activities.

3.2 System Characteristics

The system shall meet the performance, physical, reliability, maintainability, availability, environmental, and transportability requirements specified in the following sections.

3.2.1 Performance Characteristics

The system shall meet the performance requirements specified in the following sections.

3.2.1.1 NEXRAD Unit Full Load

The NEXRAD Unit full load requirements of the Radar Data Acquisition, Radar Product Generation, Principal User Processing, and Communications functional areas are defined in this section. The full load defines the total number of functions and activities to be performed concurrently within each functional area while meeting all required response time and throughput requirements (Sections 3.2.1.3 and 3.2.1.4) without loss of any data or messages.

The NEXRAD Unit full load requirements are the following:

1. Perform control and monitoring functions of the RDA functional area.

2. Monitor and transmit RDA performance data.

3. In a six-minute volume scan time,* provide nine unique elevation angles of base data, from zero degrees to +20 degrees in elevation, from the RDA to the RPG.** (See Section 3.7.1.2.1.3)

4. Process RDA control commands from the RPG.

5. Monitor and control all activities performed by the RPG.

6. Perform concurrent execution within a volume scan time period of algorithms identified in Appendix C for full load.

7. Generate the full load product mix defined in Table E-1.

8. Output products from an RPG to eight associated PUPs, assuming 9600 bps communication circuits. (The product mix for each line shall consist of those full load products that impose the worst case processing load on the NEXRAD Unit.)

9. Output products from an RPG to twelve non-associated PUPs or ARTCCs. (The product mix for each line shall consist of those full load products that impose the worst case processing load on the NEXRAD Unit.)

10. Accept rain gage input data from 50 rain gages. Data received once per hour from a maximum of one Rain Gage Data Acquisition Computer (RGDAC).

11. Process a mix of peak requests (see Section 3.2.1.2) from eight associated PUPs and the operational position at the RPG.

12. Satisfy all processing requirements defined in Sections 3.7.2.1 through 3.7.2.9.

13. Display products on each display at the RPG operational position.

14. Control all activities performed by the PUP functional area.

15. Consistent with the communications limitations of Table 3-9, receive all products at each PUP from its associated RPG. (The product mix shall consist of those full load products that impose the worst case processing load on the NEXRAD Unit.)

16. Receive products at each PUP from one non-associated RPG. (The product mix shall consist of those full load products that impose the worst case processing load on the PUP.)

17. Display products on each display at a PUP.

18. Satisfy all processing requirements defined in Section 3.7.3.

---

* Defined in Appendix B.

** Although the RPG is to be sized based on a full load requirement equal to an RPG data input rate of nine elevation scans in six minutes, the RPG must be capable of ingesting and storing data at a rate equivalent to 14 elevation scans in five minutes.

19. Process a mix of product requests from twelve non-associated PUPs. (The product mix shall consist of those full load products that impose the worst case processing load on the NEXRAD Unit.)

20. Output product(s) to four other user interfaces. (The product mix for each line shall consist of those full load products that impose the worst case processing load on the NEXRAD Unit.)

21. Consistent with the communications limitations of Table 3-9, output products from the RPG to four principal user external systems. (The product mix shall consist of those full load products that impose the worst case processing load on the NEXRAD Unit.)

22. Output products from a PUP to one principal user external system. (The product mix shall consist of those full load products that impose the worst case processing load on the PUP.)

23. Provide the full load archiving as shown in Table E-1.

3.2.1.2 Peak Request Rates

For testing purposes, The full load peak request rates shall be based on the request types of Table 3-3. The RPG shall handle up to 3 product requests (2 existing products and 1 product requiring generation) per second. Each operational position shall generate 1 display request per second. The requests shall be capable of being repeated at a frequency consistent with the response times in Table 3-4.

The peak request rate mix of request types is defined as that selection which causes the greatest processing load on the NEXRAD Unit. The requests shall be capable of being repeated every second if the response to the request is less than one second; otherwise, a request shall be repeated at a frequency consistent with the response time required for the results of the request type.

TABLE 3-3 PEAK REQUEST RATES

Product Requests: 3 per second

Product exists in RPG data base
Product requires generation

Display Requests: 1 per second

Product Selection (locally stored)
Background Map Selection/Deselection
Off-center/Preset Center
Display of Cursor Coordinates
Cursor Home
Test Pattern Selection/Deselection
Time Lapse Display

3.2.1.3 Response Time Requirements

The NEXRAD Unit shall meet the response time requirements defined in

Table 3-4. All response times* (except for Startup and Restart) shall be met while the system is processing a full load as defined in Section 3.2.1.1.

System response time requirements will be met if 90% or greater of all measurements for a statistically significant sample of the response time parameter are equal to or less than the defined requirement. A description of each function listed in Table 3-4 is given in the following sections.

TABLE 3-4 SYSTEM RESPONSE TIME REQUIREMENTS

FUNCTION	RESPONSE TIME (90th Percentile)		
	RDA	RPG	PUP
Product Selection (locally stored)	-	3 sec.	3 sec.
Product Selection (one-time basis)	-	Note 1	Note 1
Product Deselection	-	100 msec.	100 msec.
Product Turn-on/Turn-off	-	100 msec.	100 msec.
Background Map Selection/ Deselection	-	1 sec.	1 sec.
Background Map Turn-on	-	500 msec.	500 msec.
Background Map Turn-off	-	100 msec.	100 msec.
Off-center/Preset Center	-	3 sec.	3 sec.
Resolution Change	-	Note 1	Note 1
Display Annotation	-	200 msec.	200 msec.
Display of Cursor Coordinates	-	1 sec.	1 sec.
Cursor Home	-	1 sec.	1 sec.
Test Pattern Selection/Deselection	-	1 sec.	1 sec.
Status Message Output	-	10 sec.	10 sec.
Alarm/Alert Output	5 sec.	5 sec.	5 sec.
Power Fail Recovery	-	30 sec.	30 sec.
Magnification	-	3 sec.	3 sec.
Time Lapse Display			
- First Image	-	Note 2	Note 2
- Successive Images (Note 3)	-	1/3-10 sec.	1/3-10 sec.
- Image Replacement	-	100 msec.	100 msec.
Master Cursor Function	-	100 msec.	100 msec.
Hard Copy Generation	-	2 min.	2 min.
Cold Startup	15 min.	2 min.	2 min.
Warm Startup	10 sec.	-	-
Restart	Note 4	30 sec.	30 sec.
Engine Generator On-line	25 sec.	-	-

Note 1: Response times are defined for each product in Table E-1, assuming a 9600 bps, Class 1 line to an associated PUP.

Note 2: For products preselected for time lapse display, the response time shall not be greater than 3 seconds. For all other products, the response time shall not be greater than 3 seconds + 1.25 seconds per image in the display sequence.

Note 3: When successive images are displayed with a response time less than 1 second, the displayed product resolution may be reduced to not less than 256 x 256 pixels. However, the product shall fill a 512 x 512 pixel display area.

Note 4: The RDA Restart time is a function of outage time and the state of the RDA, but shall in no case exceed the RDA Cold Startup time (see 3.7.1.4).

* Defined in Appendix B

3.2.1.3.1 Product and Background Map Display

Products and background maps selected for display shall be completely displayed within the response time required. Products and background maps deselected shall be deleted from the display within the response time required. In the case of products, data displayed shall be the last completed update of that product.

Product data and background maps shall be capable of being turned on and turned off within the response times defined.

3.2.1.3.2 Off-Center/Preset Center

The off-center function shall provide the capability to reorient the display of products relative to the display center within the system geographic boundaries. The current cursor location on the display shall become the new center position when an off-center action is requested. The preset center action shall provide the capability to reorient the display to a predefined center position (adaptation data*). Map data shall be adjusted to correctly overlay the requested image. An off-center or preset center request action shall be completed within the response time required. During the processing time required to accomplish the action, the display image may be static or wholly blanked for up to the total period required to complete the action but not longer than the response time requirement. If a second off-center or preset center action is requested prior to completion of the first off-center or preset center request, then processing of the first request shall cease and the second request shall be processed.

3.2.1.3.3 Resolution Change

The resolution change function shall include the capability to change both the geographic coverage of a displayed product and the geographic resolution of the data for those products having multiple resolutions. Resolution change may be accomplished through the selection of other available resolutions of the displayed product from the RPG. When a resolution change request is made, the current display center coordinates shall be used for the center of the requested image. Background maps shall be adjusted to correctly over-lay the requested image. A resolution change shall be completed within the response time required. During the processing time required to accomplish the action the display image may be static for up to the total period required to complete the action, but not longer than the response time requirement. Following initiation of a resolution change request, a positive response shall be provided to the operator that the request has been received and is being processed. If a second resolution change action is requested prior to the completion of the first resolution change action, then processing of the first request shall be stopped and the second request shall be processed.

3.2.1.3.4 Display Annotation

The response to any operator input action which causes insertion or deletion of data on a display shall be completed within the response time required. The response time shall include the time to update a preview area* and the preview area cursor symbol, or the time to annotate a display area selected by a cursor.

---

* Defined in Appendix B

3.2.1.3.5 Display of Cursor Coordinates

The present value of the master cursor coordinates shall be updated within the response time required, after the cursor has stopped. These values shall always be displayed and consist of range/azimuth/height or latitude/longitude/height as selected by the operator. The value for height is not required for composite products.

3.2.1.3.6 Cursor Home

The cursor symbol shall be positioned at an adaptation controlled position on the display within the response time required, following the requesting action.

3.2.1.3.7 Test Pattern Selection/Deselection

Following the test pattern selection action, the test pattern shall be displayed within the response time required. Following the test pattern deselection action, the operational data displayed prior to the test pattern selection, including updated data occurring during the period the test pattern was displayed, shall be displayed within the response time required.

3.2.1.3.8 Status Message Output

Display of status messages at the unit control position, the RPG operational position, or the PUP operational position shall be completed within the time indicated in Table 3-4. This time shall be based on the time interval between arrival of a message at the functional area and completion of display, or the time interval between generation and display for a message originating within the same functional area.

3.2.1.3.9 Alarm/Alert Output

The following alarm/alert response times shall be within the times indicated in Table 3-4:

1. Time from the detection of an alarm condition to the activation of a local alarm.

2. Time from the detection of an alarm condition to the display of an alarm message at the unit control position.

3. Time from the detection of an alert condition to the display of the alert message at the operational positions.

All products automatically generated when alert criteria are met shall meet the appropriate response times for one-time product requests as shown in Table E-1.

3.2.1.3.10 Power Fail Recovery

When normal power levels have returned following a power interruption, the NEXRAD Unit shall automatically resume normal operation, all functions shall be available to users, and all previously displayed and stored data shall be displayed within the response time required. Specifically, the RDA and RPG shall retain all acquired data necessary for full load operation for any number of outages per 24 hour period with no single outage exceeding 15 seconds and the total duration of outages for a 24 hour period not exceeding five minutes with the

interval between outages not less than 0.1 second. All unit adaptation and control information shall be stored in such a manner that required response times can be met for a restart up to at least one hour after power interruption, and that all operational positions can be returned to the state existing immediately prior to the outage.

3.2.1.3.11 Magnification

The magnification function shall provide the capability to expand the currently displayed product data using the current display center point or the cursor position. The magnification function shall provide for a display of data having the same resolution as the data displayed before selection of the magnification function. The magnification function shall not be required when a display is used in a 1/4 screen mode.

Data selected for display, using the magnification function shall be completely displayed within the response time required. During the processing time required to accomplish the action, the display image may be static or wholly blanked for up to the total period required to complete the action but not longer than the response time requirement. If a second magnification action is requested from the same operational position during the period required to complete the first action, then the final display shall reflect the second action and the response time shall be measured from the completion of the second request action.

3.2.1.3.12 Time Lapse Display

A time lapse display request shall result in a sequence of images of a specific product being presented on the display, as defined in detail in Section 3.7.3.3.5. It shall be possible to time lapse any sequence of base or derived products currently in the local data base while meeting the response times shown in Table 3-4. The last image in the sequence shall remain on the display and be updated as part of the normal operational product updating sequence.

Each RPG or PUP operational position shall have the capability to preselect up to three products for future time lapse display.

3.2.1.3.13 Master Cursor Function

Operational positions shall have the capability of defining the cursors as being linked such that each cursor is positioned in the same geographic position. The cursor on either of the graphic displays shall be capable of being designated by operator action as the master cursor, with the cursor(s) on the other display being slaved. The update time for positioning each slave cursor shall be within the response time required. When a display is used in the 1/4 screen mode, there is no requirement for the capability to designate one of its four cursors as the master cursor.

3.2.1.3.14 Hard Copy Generation

The time from the request for hard copy output until it is available shall be within the response time required.

3.2.1.3.15 Startup/Restart

The time from the initiation of a startup or restart action until its completion shall be within the response time required.

3.2.1.3.16 Engine Generator On-line

In the event of primary power failure or manual selection of backup power, the backup engine generator shall become operational and on-line within the response time required.

3.2.1.4 Unit Throughput

Products generated on a routine basis by the RPG shall be displayed at operational positions at the RPG and PUP within the throughput time* requirements defined in Table E-1. All throughput time measurements shall be taken while the NEXRAD Unit is performing under a full load condition. NEXRAD Unit throughput time requirements will be met if 90% or greater of all measurements for a statistically significant sample of the throughput parameter are equal to or less than the defined requirement.

3.2.1.5 Configuration

Table 3-5 defines the as-delivered minimum operational, full-load test, and maximum operational configuration requirements for NEXRAD Units, without considering expandability requirements. Functionally, the following configurations shall be possible without modification (facilities excluded) of the NEXRAD equipment:

1. Collocated* RDA, RPG, PUP (Operational position not located in RDA/RPG equipment area)

2. Separate RDA; collocated RPG/PUP

3. Collocated RDA/RPG; separate PUP

4. Redundant, collocated RDA/RPG (3.2.1.5.1); separate PUP

3.2.1.5.1 Redundant Configuration

A capability for a collocated RDA/RPG (availability B) in a fully redundant configuration shall be provided. All RDA and RPG functional area equipment including any wideband and narrowband communications, but excluding the antenna, pedestal, tower, and backup power generator shall be redundant. The point for recombining the redundant channels shall be the output of the narrowband communications ports. A single environmentally controlled area shall be provided to house both redundant channels. The equipment shall be arranged to facilitate convenient and efficient maintenance.

The UCP functions of both channels shall be combined into one and made available at a single console for full status reporting, alarms, and control. A selection capability shall be provided at the UCP to bring either channel to standby (controlled shutdown state, 3.7.2.5.5) or full operation, regardless of the state of the other channel. The back-up power generator and the air conditioning equipment shall be sized and configured to support one channel at full operation and only the filament voltage applied to the klystron of the redundant channel.

---

* Defined in Appendix B.

TABLE 3-5 NEXRAD UNIT CONFIGURATIONS

FEATURE	AS-DELIVERED MIN./TEST*/MAX.
RDA	1/0/1
- Base Data Interface***	0/0/1
- Archive I Interface Connection***	1/0/1
- Archive II Interface Connection***	1/0/1
RDA/RPG	
- Redundancy	0/0/1
RPG	1/1/1
- Dedicated Ports to Associated PUPs/ARTCCs	0/8/****
- Dedicated Port for Remote Unit Control Position	0/0/1
- Dial-in Ports from PUPs/ARTCCs	4/12/****
- Dedicated Ports to Principal User External Systems	0/4/****
- Ports for Other Users (combined ded & dial)	0/4/****
- Dial-in/Dial-out Ports to RGDACs/RFCs	0/1/****
- Archival Capability	0/1/1
- Base Data Interface***	0/0/1
RPG Operational Position	0/1/1
- Graphic Displays per Position	2/2/2
- Alphanumeric Displays per Position	1/1/1
- Hardcopy Devices per Position	0/0/1
- Dial-out Port to RPG	0/0/****
- Dedicated Ports to PUES	0/0/****
- Ports for Other Users (combined ded & dial)**	0/0/****
- Archival Capability	0/0/1
Unit Control Position	1/1/1
- Dedicated Port for Remote Unit Control Position	0/0/1
- Alphanumeric Hardcopy Device	0/1/1
PUPs	0/1/****
- Dedicated Ports to Associated RPG**	0/1/****
- Dial-out Ports to RPG**	1/1/****
- Dedicated Ports to PUES**	0/1/****
- Ports for other users (combined ded & dial)**	0/1/****
- Archival Capability**	1/1/1
PUP Operational Position	1/1/1
- Graphic Displays per Position	2/2/2
- Alphanumeric Displays per Position	1/1/1
- Hardcopy Devices per Position	0/1/1

* Full Load Test.

** MIN/MAX values apply to each PUP or RPGOP.

*** Interface and Interface Connection defined in Appendix B.

**** The operational maximum is defined in either paragraph 3.7.2.5.13 or 3.7.3.6.6.

3.2.1.6 Useful Life

The NEXRAD System shall be designed for continuous operation and have a useful life of 20 years.

3.2.1.7 Data Processing Reserve

The equipment performing the RPG functions shall have a processing reserve such that when processing the full load requirements (defined in Section 3.2.1.1) the utilization of each of the processing, global main memory, and direct access mass storage functions shall not exceed 60%, averaged over a volume scan time period.

3.2.1.8 Expandability

NEXRAD Units shall be incrementally expandable by field modification. The expansion capability* is in reference to the NEXRAD Unit equipment to meet the NEXRAD Unit full load, as defined in 3.2.1.1, including the reserve as defined in 3.2.1.7.

The RPG functional area shall be expandable to the following:

1. Processing Capacity: 3 times
2. Global Main Memory: 3 times
3. Direct Access Mass Storage Devices: 3 times
4. Archival Storage Devices: 2 times
5. Narrowband Ports as defined in 3.7.2.5.13
6. RPGOP: Same as PUP Expandability Items 1, 2, 3, 4, and 5 defined below.

The PUP functional area shall be expandable to the following:

1. Processing Capacity: 2 times
2. Global Main Memory: 2 times
3. Direct Access Mass Storage Devices: 2 times
4. Archival Storage Devices: 2 times
5. Narrowband Ports: as defined in 3.7.3.6.6.

3.2.2 Physical Characteristics

Section 3.7.5 further defines physical characteristic limitations consistent with existing access capabilities.

3.2.3 Reliability

This section defines the hardware reliability requirements for the NEXRAD System.

---

* Defined in Appendix B

3.2.3.1 Hardware Reliability

This section defines requirements for Mean Time Between Failures** (MTBF), Mean Time Between Visits* (MTBV), and Mean Time Between Maintenance Actions** (MTBMA).

The MTBF of each independent hardware Configuration Item* (CI) shall be sufficient to enable each of the inherent Availability (A(i)) requirements of Section 3.2.5 to be satisfied.

The MTBMA of each independent hardware configuration item (CI) shall be sufficient to enable each of the achieved availability (A(a)) requirements of Section 3.2.5 to be satisfied.

For NEXRAD Units required to meet the availability requirement C (defined in Section 3.2.5), the MTBV shall not be less than 200 hours for a dual channel.* The Government will specify which NEXRAD Units must meet availability requirements B and C.

3.2.4 Maintainability

Maintainability is defined in terms of a NEXRAD Unit Mean Time To Repair (MTTR),* Mean Active Maintenance Down Time (M),** and Maximum Downtime (MDT).* These requirements are stated for field replacement of Line Replaceable Units (LRUs).*

The NEXRAD Unit MTTR shall be less than or equal to one-half hour.

The MDT requirements are defined in terms of the RDA, RPG, PUP, and Communications functional areas defined in Figure 3-4. The specific MDT requirements are as follows:

Functional Area (Figure 3-4)	MDT
RDA	2 Hours
RPG	1 Hour
PUP	1 Hour
Communications	1 Hour

3.2.5 Availability

Availability is a measure of the ability of the NEXRAD Unit to perform selected key functions at any unknown random point in time. Because of anticipated differences in usage of individual NEXRAD Units (e.g., overseas vs. CONUS use and network vs. local warning use) individual NEXRAD Units must be modularly capable of meeting unique availability requirements. These unique requirements are identified as Availability Requirements A, B, and C. Availability Requirement A shall be a baseline availability. Availability Requirements B and C shall be achievable by means of a field upgrade through the addition of redundant equipment. The Government will specify which availability requirement is applicable to each NEXRAD Unit.

For purposes of this NTR, the availability requirements are specified in terms of key functions defined in Figure 3-4 and sets of subfunctions

---

* Defined in Appendix B
** Defined in Appendix B under Availability.

for each key function defined in Table 3-6. The availability requirements are:

Key Functions and Subfunc.	Availability Requirement A A(i)*	A(a)*	Availability Requirement B A(i)*	A(a)*	Availability Requirement C A(i)*	A(a)*
1+2+3+4+5	**	**	0.9985	0.9957	0.999759	0.997020
1+2+4+(8a)	0.993	0.990	**	**	**	**
1+2+3+4+(8a)	0.991	0.988	0.991	0.988	0.991	0.988
5(d+f+g) +7(a+b+c+ e+f+g+h)	0.998	0.996	0.998	0.996	0.998	0.996
6+8(a+b+c+ e+f+g+h)	0.998	0.996	0.998	0.996	0.998	0.996
$\mathbf{G}_{n=1}^{8}$ n	0.989	0.986	0.989	0.986	0.989	0.986
9+10+11+12	0.989	0.986	0.989	0.986	0.989	0.986

3.2.6 Environmental Conditions

The NEXRAD System shall be capable of operating in and withstanding the environmental conditions specified in the following sections. Operating criteria define the conditions under which the system shall operate and meet all performance specifications. Nonoperating criteria, including those for transportation and storage, define conditions which the system shall withstand without damage.

3.2.6.1 Temperature and Humidity

The requirements for operating in extremes of temperature and humidity are as follows:

	Outdoor Environment		
	Temperature min.	max.	Humidity
Operating	-40°C	+49°C	15 - 100%
Nonoperating	-62°C	+60°C	15 - 100%

* Defined in Appendix B.
** No specific A(i) or A(a) requirement specified for this functional combination.

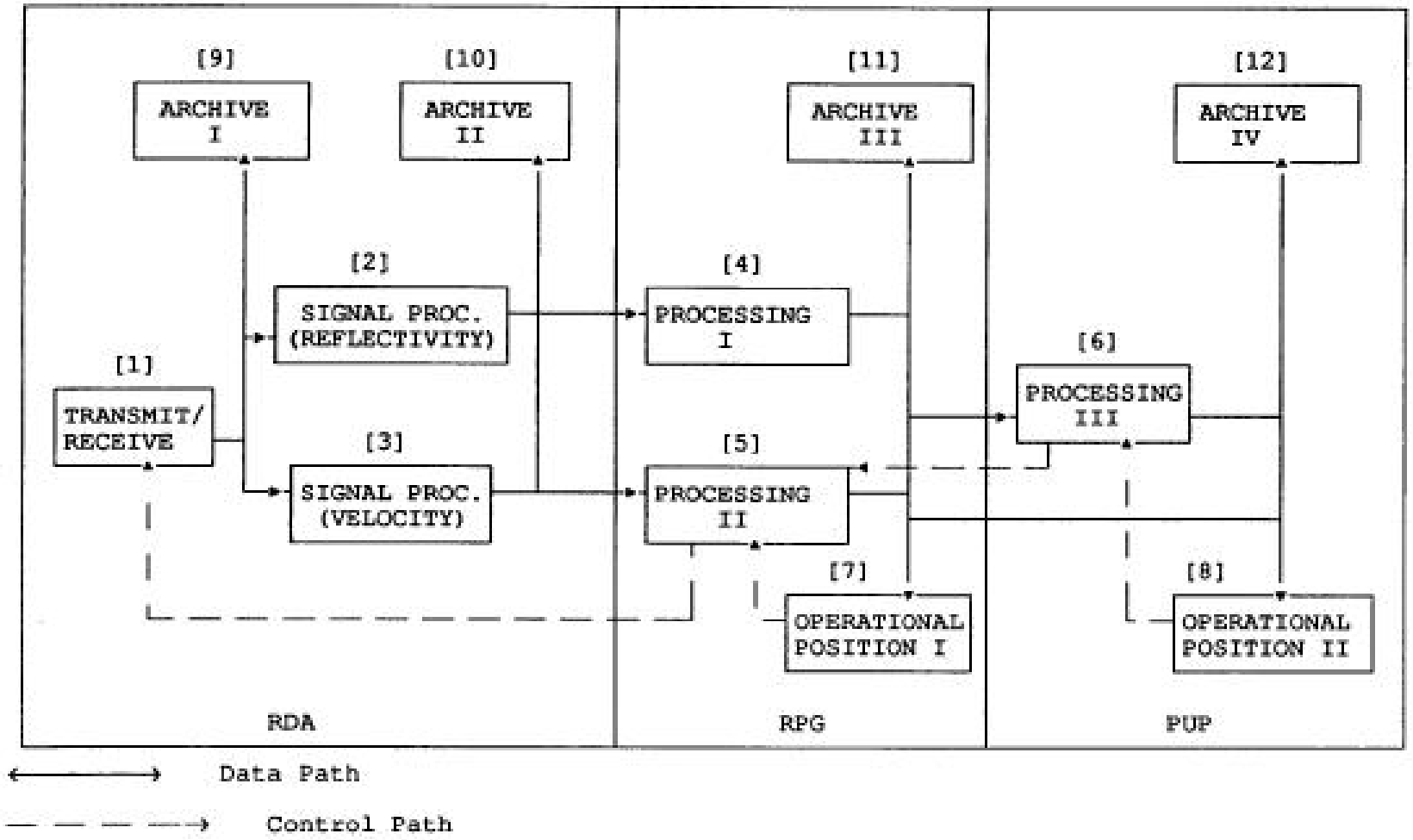

FIGURE 3-4 NEXRAD UNIT OPERATIONAL FUNCTIONAL FLOW DIAGRAM

TABLE 3-6 KEY OPERATIONAL FUNCTIONS AND SUBFUNCTIONS

	KEY FUNCTION*	SUBFUNCTIONS
1.	Transmit/Receive	a. Control antenna b. Generate pulses c. Receive echo returns d. Separate reflectivity and phase (analog) data
2.	Signal Processing (Reflectivity)	a. Provide analog-to-digital conversion for reflectivity data b. Generate digitized reflectivity estimates
3.	Signal Processing (Velocity)	a. Provide analog-to-digital conversion for phase data b. Generate digitized mean radial velocity and spectrum width estimates
4.	Processing I	a. Base product generation b. Base product distribution
5.	Processing II	a. Signature recognition b. Tracking c. Product generation (other than base products) d. On-line product storage e. Product distribution (other than base products) f. Control/status monitoring g. Accept request/reply commands from RPG operational position
6.	Processing III	a. Accept request/reply command from PUP operational position b. On-line storage of selected products c. Control/status monitoring
7.	RPG Operational Position	a. Display base products b. Display derived products c. Display alphanumeric products d. Request products from associated RPG e. Request products from nonassociated RPG f. Annotate products g. Enter adaptation data h. Control/status monitoring

* See Figure 3-4

TABLE 3-6
(concluded)

KEY FUNCTION*	SUBFUNCTIONS
8. PUP Operational Position	a. Display locally stored base products b. Display locally stored derived products c. Display locally stored alphanumeric products d. Request products from associated RPG e. Request products from non-associated RPG f. Annotate products g. Enter adaptation data k. Control/status monitoring
9/10. Archive I/II	a. Format data for recording on appropriate medium b. Support future connection of appropriate recording device
11/12. Archive III/IV	a. Format data for recording b. Control recording device c. Record selected products

3.2.6.1 Temperature and Humidity (continued)

Indoor Environment

	Temperature min.	Temperature max.	Humidity (non-condensing)
Operating	+10°C	+35°C	20 - 80%
Nonoperating	-35°C	+60°C	15 - 100%

All equipment within the radome shall meet the outdoor environment temperature and humidity requirements for operating and non-operating conditions.

For internal radome air temperatures above +25° C, forced air ventilation shall be provided to keep the radome interior within 5° C of the exterior ambient air temperature.

3.2.6.2 Pressure and Altitude

Equipment located at a radar site must be capable of operating at altitudes up to 3300 meters above mean sea level. Equipment located at a user site must be capable of operating at altitudes up to 2100 meters above mean sea level.

3.2.6.3 Solar Radiation

Exposed** NEXRAD equipment shall be capable of withstanding the

* See Figure 3-4.
** Exposed equipment is that equipment not normally located in a controlled environment, including radomes, towers, shelters, etc.

following intensities of ultraviolet, visible, and infrared radiation.

Portion	Wavelength (Microns)	Intensities (Wft^{-2})*	Percent of Total
Ultraviolet	< 0.38	4-7	4-7
Visible	0.38-0.78	25-50	24-48
Infrared	> 0.78	50-72	48-69

Total Intensity = 104 $\pm$ 1 wft^{-2}

3.2.6.4 Rainfall

Exposed NEXRAD equipment shall be operable and sustain no physical damage or significant degradation in performance when subjected to wind and rain under the following conditions:

1. Operational - An instantaneous rain rate equivalent to 300 mm per hour with a maximum wind speed of 18 ms^{-1}

2. Nonoperational -

   a. A 1-hour average rain rate of 130 mm per hour (with an instantaneous rate of 400 mm per hour) with a wind speed of 33 ms^{-1},

   b. A 12-hour average rain rate of 30 mm per hour with a maximum wind speed of 26 ms^{-1}, and

   c. A 24-hour average rain rate of 18 mm per hour with a maximum wind speed of 21 ms^{-1}

3.2.6.5 Fungus

Exposed NEXRAD equipment shall be compliant with Requirement 4 (Fungus-Inert Materials) of MIL-STD-454.

3.2.6.6 Salt Fog

Exposed NEXRAD equipment shall be capable of continuous operation in a salt laden atmosphere without degradation of material surfaces or performance.

3.2.6.7 Sand and Dust

Full performance requirements shall be met when exposed NEXRAD equipment has been subjected to the effects of blowing fine sand and dust particles with wind speeds up to 18 ms^{-1}, and particle concentration of 0.177 grams per cubic meter with particle sizes up to 150 micrometers in diameter.

3.2.6.8 Wind

The RDA shall provide a pointing accuracy in both azimuth and elevation of $\pm$1/3° rms in a steady wind of 25 ms^{-1}, and $\pm$1° rms in a steady wind of 50 ms^{-1}.

---

* Watts per square foot.

The radome and tower shall be capable of withstanding, without physical damage for both operational and nonoperational conditions, a steady wind or gust up to 60 ms^{-1}.

All wind speeds of Section 3.2.6 are measured at the maximum height of the tower.

3.2.6.9 Snow and Ice Load

The radome and tower shall sustain no physical damage when subjected to 235 kilograms per square meter of snow and ice loading.

3.2.6.10 Lightning

All NEXRAD equipment shall be compliant with NWS Transient Susceptibility Standard (May 1978) as follows:

1. AC Powerline Transients - Test Level I, with acceptance criteria 3.3(b) both common and transverse mode

2. Signal Line Transients - Test Level I, with acceptance criteria 3.3(b). Crosstalk per 4.3.1; lightning effects per 4.3.2 both common and transverse mode.

3. Static Discharge - 7.5 KV, 50 pulses, both controlled and uncontrolled.

3.2.6.11 Electromagnetic Compatibility (EMC), Electromagnetic Interference (EMI) and Radio Frequency Interference (RFI)

The NEXRAD System shall comply with all recommended general requirements (Part 1) and all recommended specific requirements as Class A3 (USAF requirements), as covered in MIL-STD-461C.

3.2.6.11.1 Emissions (Conducted)

The emissions (conducted) requirements are as follows:

	Applicable Specification	Range of Requirements
1. A. C. Power (50/60HZ)	CE03	15 KHz - 50 MHz
	CE07	±50% of nom. RMS volt
2. D. C. Power and Control Lines	CE03 CE07	15 KHz - 50 MHz +50%, -150% of nom. volt
3. Antenna Terminals		
a. Receivers	CE06	(NB) 34 dB:V (BB) 40 dB:V/MHz

	Applicable Specification	Range of Requirements
b. Transmitters (Key up)	CE06	(NB) 34 dB:V (BB) 40 dB:V/MHz
c. Transmitters (Key down)	CE06	80 dB down from f_o

3.2.6.11.2 Emissions (Radiated)

The emissions (radiated) requirements are as follows:

	Applicable Specification	Range of Requirements
All NEXRAD Radar PUP and RDA Equipment	RE02	(NB) 14 KHz - 10 GHz (BB) 14 KHz - 1 GHz

3.2.6.11.3 Susceptibility (Conducted)

The susceptibility (conducted) requirements are as follows:

	Applicable Specification	Range of Requirements
1. All Power lines	CS01 CS02 CS06	30 Hz - 50 KHz 50 KHz - 400 MHz Spikes & Transient
2. Antenna Terminals	CS03 CS04 CS05 CS07	Intermodulation, 2-signal Residual of undesired signals Cross Modulation Squelch (if any) Test 1 90 db/:v/MHz Signal-Signal method Test 2 2-Signal Method

3.2.6.11.4 Susceptibility (Radiated)

The susceptibility (radiated) requirements are as follows:

	Applicable Specification	Range of Requirements
1. a. Spikes	RS02	Spike Transient
b. Power Frequency	RS02	Inductive Transient
2. Electrical Field	RS03	14 KHz - 10 GHz

3.2.6.11.5 Reference Test Data

Magnetic field radiated emissions, RE01, and magnetic field radiated susceptibility, RS01, tests shall be performed in accordance with MIL-STD-462 and test data shall be provided in the EMI test report.

3.2.7 Transportability

Except for radar antennas, each equipment item procured for the NEXRAD System shall, in its packed-for-shipment configuration, be capable of being transported via common surface, air, or sea carrier at the option of the procuring agency. Size, weight, and physical characteristics shall not exceed the limits imposed for commercial equipment by any particular common carrier selected.

NEXRAD radar antennas shall be capable of being readily transported to the specified radar sites based on a contractor selected method which is subject to Government approval.

3.3 Design and Construction Requirements

The design and construction of the NEXRAD System shall be accomplished in accordance with the requirements specified herein.

For new equipment designs, the general equipment requirements contained or referenced in MIL-E-4158 for the design (except for human engineering, maintainability, reliability, climatic service conditions, electronic countermeasure vulnerability, and encapsulation and embedment); parts; materials; processes; nomenclature, identification marking, and labels; and workmanship shall apply.

The contractor shall ensure that at least two sources exist for all parts used in the NEXRAD System.

3.3.1 Materials, Processes, and Parts

The selection of materials, processes, and parts to be used in NEXRAD System equipment shall conform to the requirements specified in the following sections.

3.3.1.1 Trade Practices and Nonspecified Processes and Materials

Where the design, quality, or function of the system or any part thereof is not controlled by the requirements of this document, such design, quality, or function shall comply with applicable ASTM and National Electrical Code standards and requirements.

3.3.1.2 Selection of Electrical and Mechanical Parts

The selection of electrical and mechanical parts shall satisfy the following requirements:

1. The specified performance of the system shall be obtained without the special selection of any part(s).

2. The system shall comply with this document when any part meeting the part manufacturer's specification is used.

3. Parts whose characteristics are more restrictive than those specified by the part manufacturer shall not be used.

4. The use of parts shall not be dependent upon characteristics not specified by the part(s) manufacturer.

5. Specified system performance shall be obtained by installing acceptable parts at random as received from the part

manufacturer without subsequent replacement or interchanging thereof.

3.3.1.3 Part Limits and Ratings (Electrical and Mechanical)

The part manufacturer's specifications and limits for any part shall not be exceeded when the system is subjected to and operated under the conditions specified in Section 3.2.6 and in accordance with all other requirements of this document. Derating of parts shall be accomplished as necessary to assure the required reliability within the specified operating conditions.

3.3.1.4 Mechanical Design

Unless basic component size and/or maintenance accessibility prohibit, all major equipment used in the NEXRAD System (e.g., computers and storage devices) shall be designed for a standard 19 inch rack mounting. All parts shall be securely mounted and attached and shall withstand the rigors of transportation, operation, and maintenance without damage.

The NEXRAD System shall be designed to:

1. Allow localization of malfunctions to a defective LRU without disassembly or removal (extender boards allowed).

2. Allow routine operation or maintenance without the removal of structural members.

3. Allow direct access to LRUS, test points, and maintenance adjustments without disassembly or removal (extender boards allowed).

3.3.1.5 Equipment Circuit Design

The NEXRAD System circuitry shall be solid-state except in those areas of design where solid-state devices are not available, exhibit a low MTBF, are considered beyond the state-of-the-art, or are not consistent with meeting lowest life cycle cost. All circuit design shall be based on the following criteria except where noted:

1. Solid state circuit design shall be based on commercially available semiconductor devices manufactured to domestic (USA) standards, and available for delivery from two or more domestic sources.

2. The use of the following shall be minimized:

   a. Parts with ribbon leads.

   b. Solder-in relays. (Plug-in relays shall be used in lieu of solder-in relays wherever practical.)

   c. Nonrepairable electrical subassemblies.

3. Circuitry shall be of modular design wherever it is compatible with circuit performance. Specifically:

   a. Groups of related circuits or individual circuits shall be on individual printed circuit boards.

1) Plug-in card carrier mounted, printed circuit boards with locking/extraction tabs shall be used where practicable.

2) The physical and structural characteristics of all printed circuit boards shall be standardized to the maximum extent feasible.

3) Connections to all printed circuit boards shall be through edge connectors wherever possible; all connections not made through edge connectors shall be through connectors mounted on the part mounting side of the printed circuit board.

4) All plug-in circuit boards shall be keyed and labeled to prevent improper installation. When boards are commonly keyed they shall be interchangeable with any other available slot within a given unit without affecting compliant equipment operation.

5) All printed circuit boards not mounted in card carriers shall be directly accessible for maintenance without removing the board from the system. (Such boards shall be easily removable for repair or replacement.)

b. Groups of circuits and circuit boards performing interrelated functions shall be constructed as individual modules (e.g., power supplies).

1) All power supplies shall be protected from damage caused by output overloading and short circuits.

2) Electrical parts shall not be mechanically connected to connectors or socket conductors.

c. Use of hard wire or wire wrap construction is permitted for mother boards or interconnecting sockets. Use of hard wire or wire wrap construction in other printed circuit boards or subsystems shall require prior government approval. All wire wrap construction shall be in accordance with MIL-STD-1130. All wire wrap construction techniques shall include covers over all wire wrap pins that provide protection during maintenance, handling, and shipment.

4. Each plug-in printed circuit board shall have extraction tabs or utilize zero force insertion edge connectors for easy board removal.

5. The heat generated by any part shall not discolor or damage any printed wiring or any printed circuit board.

6. All parts and materials shall be mounted and used in a manner compliant with the manufacturer's recommended practices and specifications.

3.3.2 Electromagnetic Radiation

The electromagnetic radiation requirements defined in Section 3.2.6.11, Section 3.7.5 and its subsections, and Appendix F shall be satisfied.

3.3.3 Nameplates and Nomenclature

Nameplates shall comply with Figure 3-5. Individual nameplates shall be permanently affixed to the major assemblies or enclosures on an exposed area other than operating panels and doors. LRUs shall contain reference designators in accordance with IEEE 200-75.

3.3.4 Workmanship

The minimum standard of workmanship to be applied during fabrication shall be compliant with Requirement 9 of MIL-STD-454.

3.3.5 Interchangeability

Each type of LRU shall be physically, mechanically, structurally, and electrically interchangeable in and between all NEXRAD equipment procured under this document without modification and without causing any unit to deviate from the requirements of this document.

3.3.6 Safety

The NEXRAD System shall be compliant in all respects with OSHA Safety and Health Standards (29 CFR 1910) and with American National Standards Institute Standard ANSI C95.1-1982. In addition, the following requirements of MIL-STD-454 shall be satisfied:

1. Requirement 1 - Safety (Personnel Hazard).
2. Requirement 3 - Flammable Materials.
3. Requirement 45 - Corona and Electrical Breakdown Prevention.

3.3.7 Human Performance/Human Engineering

The NEXRAD equipment and facilities shall comply with MIL-STD-1472. In general, the design of NEXRAD equipment and facilities supplied by the contractor shall provide for human engineering and biomedical factors that affect human performance.

3.3.7.1 Acoustic Noise Requirements

Acoustic noise requirements for equipment accessed by maintenance personnel only and for equipment in areas occupied by operational personnel are defined in the following sections.

3.3.7.1.1 Equipment Accessed by Maintenance Personnel Only

The acoustic noise level of NEXRAD equipment which is normally accessed by maintenance personnel only shall not exceed condition A of the tabulation of noise limits defined in section 3.3.7.1.3. Acoustic noise level requirements apply to operating free-standing equipment, with all internal fans necessary for proper air flow and cooling operating normally.

DOPPLER METEOROLOGICAL RADAR SYSTEM

WSR-88D

MADE FOR

U.S. DEPARTMENT OF COMMERCE

NOAA-NATIONAL WEATHER SERVICE

CONTRACT NO [ ] DATE [ ]

(CI NOMENCLATURE) SERIAL NO. [ ]

(CONTRACTOR'S NAME)

(CONTRACTOR'S ADDRESS)

(CONTRACTOR'S ADDRESS)

1. Name Plate shall be made of 1/32" thick aluminum, type 1100-H14 (ASTM B209).
2. Dull Metal Finish Characters, Border & Boxes.
3. Etch Background and Fill with Black.
4. Anodize Per MIL-A-8625, Type II (Sulfuric Acid).
5. Apply a Coat of MFP Varnish Per MIL-V-173A Over WS-N-SD001 (Rev A) Face of Nameplate.
6. Dimensions for Standard Name Plate are 3" x 2 1/2"; Overall Dimensions May Be Altered to Suit Equipment Size, Relative Size of Lettering Shall be Maintained.

FIGURE 3-5 STANDARD NAME PLATE, WS-N-SD001A

Acoustic noise level measurements shall be performed on operating equipment. The measurements shall be taken a distance of 1.0 meters from the cabinet sides and 1.5 meters up from the floor. Measurements shall be taken on the air inlet and air exhaust sides of cabinets wherever air is drawn in or exhausted via the sides of cabinets. Measurements shall be performed in an environment where ambient noise levels do not constitute more than 5 percent of the noise generated by the equipment at any frequency.

3.3.7.1.2 Equipment in Areas Occupied by Operational Personnel

The acoustic noise level of RPG and PUP equipment installed in areas occupied by operational personnel shall not exceed condition B of the tabulation of noise limits defined below. This shall include all RPG functional area equipment and all PUP functional area equipment. Optional noise suppression devices (acoustic panels, baffles, etc.) may be used to satisfy this requirement. Individual measurement sets may be used for the RPG and PUP. Acoustic noise level requirements apply to operating equipment with all internal fans necessary for proper air flow and cooling operating normally.

Acoustic noise level measurements shall be performed on operating equipment in an environment where ambient noise levels do not constitute more than 5 percent of the noise generated by the equipment at any frequency. Measurements shall be performed 0.8 meters from the front, rear, and each side of the equipment (not the noise suppression device) at a height of 1.2 meters.

3.3.7.1.3 Acoustic Noise Limits

The following tabulation provides the noise limits for NEXRAD equipment expressed in decibels (dB) with a reference of 0.0002 dynes per square centimeter.

FREQUENCY BANDS (Hz)

CONDITION	20-75	75-150	150-300	300-600	600-1200	1200-2400	2400-4800	4800-9600	9600-20000
A	100	89	82	76	73	70	68	67	66
B	79	68	59	52	48	45	43	42	41

3.3.7.2 Heating Requirements

At selected sites, the contractor shall provide a modular heating capability in the radome. One of three levels of heat shall be provided to correspond to three geographic temperature zones, the coldest being -40 degrees Celsius. Resistive and/or infra-red electric heating shall be provided to produce:

1. An acceptable working environment for maintenance personnel to work on the azimuth and elevation bearing and drive areas of the pedestal

2. A minimum temperature of -5 degrees Celsius on the internal pedestal components in the vicinity of the azimuth and elevation drives for safety concerns of skin-to-metal contact.

Heating of the entire radome is not required. During normal operations, the radome interior shall not require heating. The heating mode shall

be manually activated from the RDA maintenance position. Total power consumption for this heating capability shall not exceed 30 kW. Backup power support for the radome heat capability is not required.

3.3.8 Computer Software

The requirements described in this section shall apply to all computer software used to satisfy the requirements of this document. These requirements relate to:

1. Computer Program Functional Composition
2. Design Techniques
3. Documentation Constraints
4. Coding Conventions and Standards
5. Language Standards
6. System Software Augmentation
7. Microprogramming
8. Microprocessor Software
9. Program Regeneration

3.3.8.1 Computer Program Functional Composition.

The computer program functional composition shall consist of computer program configuration items, computer program components, and modules as defined below:

1. Computer Program Configuration Item (CPCI). A CPCI is the actual computer program end item in the form of computer instructions and data stored on machine-readable media. A CPCI shall consist of one or more computer program components.

2. Computer Program Component (CPC). A CPC is a functionally and logically distinct part of a CPCI. A CPC is identified for purposes of convenience in specifying and developing a CPCI as an assembly of subordinate elements. A CPC consists of a logical composition of one or more subordinate or interfacing modules.

3. Module. A module performs a complete logical process by execution of a set of instructions which have clearly defined inputs, processing logic, and outputs. A module is the smallest set of executable statements assembled or compiled.

3.3.8.1.1 Module Characteristics

A software module shall have a single name by which it is invoked. Ninety percent of all modules shall contain no more than 100 lines of executable source code, excluding comments. No module shall exceed 200 lines of executable source code, excluding comments. Each module shall contain a single entry point and a single exit.

3.3.8.1.2 Module Communication

Communication between modules shall be through well defined interface calls. Control paths shall be rigorously defined. Modules shall be referenced only as entities and shall always be referenced via their names. Communication between modules shall be limited to the passing of data, flags, or tables. Modules shall share only global data (i.e., data known to the whole CPCI).

3.3.8.2 Design Techniques

Design techniques shall be used which facilitate the development of reliable and maintainable software. These techniques shall include those related to the use of structured design and structured programming.

The responsibility for all aspects of the software design shall be retained by the contractor, even after Government participation in design reviews.

3.3.8.2.1 Structured Design

All NEXRAD software shall be designed using structured design techniques. Structured design is based on the technique of progressive refinement of the software system architecture. This refinement proceeds from a high-level conceptualization represented by a top-level structure to a precise and detailed level represented by a low-level structure suitable for implementation.

Design of a lower level shall not begin until the design for the next level above it is complete. The design for a level is not complete until:

1. All the design documentation has been completed, and

2. The design for the level has been reviewed (in a walkthrough or its equivalent).

The start of design of a lower level does not freeze the higher level design. It is recognized that there is a constant inter-action between levels as the design of one level may uncover weakness at higher levels. This iteration is allowable since it forces a more complete definition of requirements at the higher level.

If a change in a higher level design is necessary, the modification and its interactions with previously designed modules shall be reviewed prior to any review of the lower level design which forced the change.

Each level in the hierarchy shall consist of a set of modules. The processing performed by each module shall be described in the module prologue and in the program design language (PDL) description of the module. PDL, also known as pseudo-code or structured English, is a semiformal specification language that is used to describe the processing performed by a module and the data used in the module.

3.3.8.2.2 Structured Programming

Structured programming, a systematic methodology for implementing program execution logic, shall be used for all NEXRAD software. A set

of control structures shall be defined and only those structures shall be allowed to alter the flow of control within a module. If possible, the unconditional branch is not to be used.

The choice of a set of control structures is dictated somewhat by the choice of programming language. An example of a typical set of control structures follows:

1. Sequence - two or more contiguous operations.
2. If-then-else - conditional branch to one of two operations and continue.
3. Do while - operation continued while a condition is true.
4. Case - select one of several alternatives.

Control structures shall be implemented via macros or a precompiler if they are not part of the programming language in use.

3.3.8.3 Documentation Constraints

NEXRAD software documentation shall consist of the following:

1. Structure Diagrams
2. Data Flow Diagrams
3. Module Prologues
4. Program Design Language (PDL) Descriptions
5. Source Code
6. Data Dictionary

The structure diagrams shall show the hierarchical relationship among the software modules, including the interface between modules. The structure diagrams, or other Government approved method, shall also show the flow of control among the modules.

Data flow diagrams are network representations of the system that show the flow of data (rather than control). The data flow diagrams shall include the representation of the data structures in the system as well as the processing (transforms), input sources, and output destinations.

Module prologues shall provide descriptive information on the module, including inputs and outputs, files which are used, and other modules which are called.

The program design language (PDL) descriptions shall use a semiformal specification language and shall include sections which describe the processing functions performed by a module. The processing section shall use English phrases to describe the functions performed by the module. Each phrase shall specify an action and shall be drawn from the set of key words and syntax rules that make up the PDL standards.

Complete source code and related documentation shall be provided for all operational and support software.

One automated data dictionary shall be generated that will contain all of the data within the system. Each data item shall be included along with an English description and all of its relevant elements (e.g., type, size, range, index, etc.). Report generation capability shall be provided.

3.3.8.4 Coding Convention and Standards

The following conventions and standards are required for all software code:

1. Code Indentation. Lines of code within a control structure shall be indented to the corresponding logical depth. (This enables the reader to quickly localize the code affected by the control structure using only visual inspection.)

2. Global Data and Work Areas. Standards for the use of global data and work areas shall be defined at the start of design and enforced throughout the development effort.

3. Standard Routines. Routines for frequently repeated coding units (e.g., module initialization and register set definitions) shall be identified.

4. Libraries. Routines that perform frequently required functions shall be maintained in a library.

5. Self-Modifying Code. Code which modifies itself or the code of other modules during execution shall not be used.

6. Line Length. No more than one source statement shall be allowed per line. In no case shall an executable source statement be continued for more than two lines. In no case shall a non-executable statement be continued for more than seven lines.

7. Branch. If an unconditional branch is used it shall be accompanied by enough comments to make its purpose and justification for use clear.

8. Data Types. The data type for each data structure (constant, individual data element, or array) in a module shall be explicitly defined (even if the implementation language does not require it).

9. Comments. Each module shall contain sufficient comments to enable easy debugging, testing, modification, and maintenance of the module. A prologue, consisting of a series of comments prior to any executable code or data definitions, shall be provided for each module. This prologue shall contain, at a minimum:

   a. The name and version of the module,

   b. Function of the module,

   c. Invocation method and parameters for the module,

   d. Files and tables used by the module,

e. Language used in the module,

f. Inputs to the module and their format,

g. Outputs from the module and their format,

h. Other modules called by this module,

i. Name of the programmer responsible for the module,

j. Date the module was first coded and the dates of any subsequent revisions,

k. Error conditions,

1. Miscellaneous information, such as interrupt level, privileged status, registers used, and reentry, and

m. Compilation/assembly and linking instructions.

The PDL used to describe the module shall appear after the module prologue.

In the body of the module, comments shall be used to clarify the operation of the module and shall appear with a frequency of at least one comment per five source lines. Complex instruction sequences (e.g., interrupt handling) shall be extensively commented. Comments shall accurately reflect the code. Whenever code is changed, the corresponding comments and PDL shall be modified to reflect that change.

10. The following coding practices shall not be used:

a. Absolute referencing of memory (without prior Government approval),

b. Use of embedded constants or literals, with the exception of 0 and 1 when the logical meaning is 0 or 1 (i.e., incrementing, decrementing, initializing),

c. Use of literal in operative statements. All constants should be declared, commented upon, and used by their symbolic names,

d. Resetting the index of a loop in the body of the loop,

c. Branching into a loop from outside the loop, and

f. Use of the same argument as both the input and the output to a module.

3.3.8.5 Language Standards

Only one PDL shall be used. Only Government approved control structures shall be used. The use of indented PDL code to highlight logic structure and the use of self-defining data names are required.

All software developed for the NEXRAD System shall be written in a high order programming language except for those cases where it can be shown that memory constraints, processing efficiency requirements, or some other system restrictions dictate the use of assembly language. If, in

order to meet the requirements of this document, it is necessary to code certain components of the NEXRAD System in assembly language, the specific modules affected shall be identified and the appropriate justification provided so that the Government may review and decide whether the exception is justified. No modules shall be coded in assembly language without prior Government approval.

The high order language used is subject to Government approval but, at a minimum, shall meet the following requirements:

1. An ANSI or DOD standard shall exist for the language.

2. The implementation of the language used in the NEXRAD System shall comply with an ANSI or DOD standard, and shall have undergone formal verification by a standards agency.

3.3.8.6 System Software Augmentation

When vendor-supplied commercial quality, off-the-shelf* system software is used in the implementation of the NEXRAD operational software, the following rules apply:

1. Augmentations shall be limited to the design of new software. No augmentations shall be embedded within the vendor-supplied, off-the-shelf system software.

2. All augmentations shall interface with the vendor-supplied operating system.

3. Augmentation software (including interface software) developed for the NEXRAD System shall not compromise the capability to support any off-the-shelf software (e.g., an operating system or a data base management system) over the life of the system.

3.3.8.7 Microprogramming

Microprogramming (or microcoding) is a method of implementing the control functions of a computer. Modifications or additions to the control functions of a processor shall be subject to review and approval by the Government. All newly developed microprograms shall comply with requirements for software listed in Section 3.3.8.3. With Government approval, the requirements for the use of a high order language and structured programming techniques may be waived in the case of microcode. Any microcode implementation shall be reproducible by the Government.

3.3.8.8 Microprocessor Software

Software intended for execution on a microprocessor shall be subject to the same software constraints and requirements as the software intended for execution on large-scale processors. Microprocessor software shall satisfy all the requirements called out in Sections 3.3.8.1 through 3.3.8.7 of this document. This includes the requirements for the use of a high order language and structured programming methodologies.

---

* Defined in Appendix B.

3.3.8.9 Program Regeneration

All software delivered by the contractor shall be capable of being regenerated by the Government using contractually delivered support software (or firmware) and hardware.

For all existing, commercially available software provided to meet the requirements of this document, the contractor shall supply the Government with all updates to the software until the end of the Production Phase. Updates shall include object code and documentation revisions as appropriate. If the Government encounters errors in any of this commercial software, the contractor shall undertake corrections in accordance with standard commercial practice until the end of the Production Phase.

3.3.9 Firmware

Firmware is defined to consist of those programs or microprograms that reside in the class of memory that cannot be dynamically modified by the computer during its processing. The class of memory includes read-only memory (ROM), programmable read-only memory (PROM), or writable control store (WCS). Documentation of the firmware memory shall be included in the hardware development specification while documentation of the firmware program shall be included in the software development specification and product specification (as appropriate). All firmware shall be subject to all software constraints and requirements. Any firmware implementation shall be reproducible by the Government.

3.4 Documentation

The documentation items that shall be prepared by the contractor for the NEXRAD program, along with a detailed description of the requirements of each documentation item, are contained in the Contract Data Requirements List (CDRL).

3.5 Logistics

The NEXRAD System shall be designed so that it can remain fully operational through the use of normal maintenance procedures throughout its specified useful life period. The logistics system for NEXRAD shall coordinate the hardware configuration with the availability and maintainability requirements. The NEXRAD logistics system shall be based on existing principal user logistic systems and shall augment those existing systems to the maximum extent possible. The design of the logistics system shall assume that NEXRAD will be maintained by Government personnel.

3.5.1 Maintenance

System maintenance shall include all maintenance equipment, software, and procedures required for maintaining the NEXRAD System, and shall include both periodic and corrective maintenance actions.

3.5.1.1 Maintenance Concept

The general NEXRAD maintenance approach shall be to centrally monitor system performance at the RDA, RPG, and PUP level, to localize the failures through the use of software and hardware maintenance features,

and to replace the failed Line Replaceable Unit (LRU)* from on-site spares, whenever available. The actual repair of a replaced item will be performed either in a designated on-site repair area with equipment not part of the operational system or at a depot. Diagnostic software and maintenance features shall be designed to rapidly isolate malfunctions to the LRU level.

The NEXRAD maintenance practices, which shall augment the maintenance practices of the principal users, require that the individual who performs on-equipment, on-site maintenance (removal and replacement of the LRU) will also perform any off-equipment, on-site maintenance (repair of the faulty LRU). If a failed LRU is not repaired on-site, it will be coded for off-site repair and sent to a repair depot. The concept of removal and replacement shall be implemented, and maximum use shall be made of depot level repair, consistent with the LCC analysis.

3.5.1.2 Personnel Skill Level

The NEXRAD logistics system shall be designed to allow the system to be maintained by the personnel of the principal users.

The skill of these personnel varies. For those sites staffed by DOD, maintenance personnel will consist of skill level 5 (journeyman) airmen or equivalent. Individual qualifications of DOD maintenance personnel vary from graduates of basic electronic and systems technical schools with several years experience to new graduates of these schools. NWS and FAA will, in general, use skilled maintenance personnel with several years experience.

Maintenance personnel will have completed the NEXRAD maintenance training before being responsible for maintenance of the NEXRAD equipment.

3.5.1.3 Diagnostic Techniques

Fault isolation to the LRU without component removal shall be incorporated into the system design. This shall be achieved through the use of Built-In Test Equipment (BITE), automatic alarms, indicator lights, and computer diagnostic and system diagnostic software. The equipment shall be designed to minimize the use of special support equipment. Easily accessible test points shall be provided to facilitate the use of external test equipment. The BITE system shall provide remote performance monitoring, parameter measurements, and equipment adjustments sending performance information to the appropriate maintenance control section of the unit responsible for maintaining the system.

3.5.1.4 Calibration

Calibration will be conducted to maintain operational equipment performance parameters and characteristics to specification tolerances. To the degree warranted by good engineering practices, development of performance diagnostic techniques using external support equipment will be oriented toward providing measurements more precisely than the tolerances of the operating equipment/performance parameters to be measured. Precision Measuring Equipment Laboratory (PMEL) support will be provided by the Government.

---

* Defined in Appendix B.

3.5.1.5 Maintenance Environment

Equipment will be located at fixed worldwide locations. For DOD, on-site maintenance will be accomplished in accordance with AFR 66-1. For FAA, on-site maintenance will be accomplished in accordance with DOT/FAA Order 6000.27. For NWS, on-site maintenance will conform with Weather Service Operations Manual (WSOM) Chapter H-50, Equipment Maintenance Program, and WSOM Chapter H-98, Engineering Directives Subsystem. Off-site maintenance will be performed by a designated principal user organization. That organization will arrange for service engineering modifications.

3.5.1.6 Categories of Maintenance

On-site maintenance personnel will perform both on-equipment and off-equipment maintenance. The NEXRAD equipment shall be designed to be maintained by an organization that uses the same technician to accomplish both categories of maintenance.

3.5.1.7 Depot Maintenance

The Government will provide a single central depot to support all LRUs not repaired on-site.

3.5.1.8 Supportability

NEXRAD system support will be consistent with: a single Operational Support Facility which provides engineering, operations support, and software systems maintenance; a single depot which provides central repair and reprocurement services; and a separate supply depot for each principal user.

3.5.2 Supply

The NEXRAD contractor shall provide spare parts, hold provisioning conferences, and provide provisioning documentation in accordance with the contract schedule. The contractor shall provide site spares and initial depot spare parts. The site spares shall be LRUS. The provisioning conferences will be held at the discretion of the Government. At the provisioning conferences, the contractor shall provide provisioning data drawings and other services related to the Government determination of provisioning items. The contractor shall provide provisioning documentation consisting of provisioning parts list, numerical parts list, long lead-time item list, and item identification/item logistics data records. A single principal user will be responsible for ordering all non-consumable NEXRAD supplies. This agency will redistribute supplies to the other NEXRAD principal users utilizing normal supply systems where possible. The contractor shall guarantee that adequate spare parts will be available in sufficient time to replenish inventories without impacting system operation. The guarantee shall be for 20 years after the first limited production model installation.

3.6 Training

The contractor shall provide initial training to a cadre of personnel from each of the principal users; this initial training shall cover both the operation and maintenance of the NEXRAD System and shall be a combination of formal classroom courses and hands-on equipment training. The initial cadre of personnel will then assume responsibility for

training additional personnel at the NEXRAD training facilities.

Separate training shall also be provided that will enable designated personnel to maintain delivered software.

3.6.1 Limited Production Training

During limited production, the contractor shall provide at the Government's option, training for principal user personnel who will be engaged in the following activities or assignments:

- Operational Test and Evaluation
- Software Maintenance
- Initial Cadre Instruction
- Field Operations and Maintenance
- Depot Repair/Logistics

3.7 Functional Area Characteristics

Characteristics are specified herein for the NEXRAD functional areas, consisting of the following:

1. Radar Data Acquisition
2. Radar Product Generation
3. Principal User Processing
4. Communications
5. Facilities
6. Support

3.7.1 Radar Data Acquisition Functional Area

The Radar Data Acquisition (RDA) functional area shall provide the capability to acquire, perform signal processing on, and transfer weather radar data to the Radar Product Generation (RPG) functional area, either directly, if the RDA and RPG are collocated, or via the Communications functional area, if the RDA and RPG are not collocated.

3.7.1.1 General Requirements

The RDA shall include an antenna, pedestal, radome, transmitter, receiver, signal processing capability, control capability, monitoring and error detection capability, and an interfacing capability. These capabilities shall provide for the detection and measurement of weather phenomena to the extent defined in Section 3.7.1.2, while meeting the reliability, maintainability, and availability requirements defined in Sections 3.2.3, 3.2.4, and 3.2.5, and while operating within the environmental conditions defined in Section 3.2.6.

Monitoring and control functional capabilities (defined in Section 3.7.1.9) shall be included in the RDA to support both operations and maintenance activities.

The RDA shall be capable of operation in at least two modes, designated Mode A and Mode B. All requirements of Section 3.7.1 shall apply to both Modes A and B. Selection of Mode B, for short range, clear air

observations shall require a manual action from the unit control position. Deselection of Mode B shall be accomplished automatically. Criteria for automatic mode selection/deselection are provided in Appendix I. A manual capability to return to Mode A shall be provided at the unit control position.

For selected sites a long pulse capability shall be provided. Radar system parameter changes allowed for this long pulse capability are a 3 dB pulse volume depth less than 750 meters, a Nyquist velocity greater than 11 ms^{-1}, reflectivity measurement out to a maximum range of 230 km, and a longer system dwell time to allow attainment of the requirements of Section 3.7.1.2.3.1.

The RDA shall be designed for unattended operation.

The RDA shall operate using commercial power as specified in Section 3.7.5.2.1. In the event that primary power fails or degrades below acceptable limits, the RDA running under secondary (backup) power shall become operational automatically. Acquisition of radar data during periods of either primary or backup power failure is not required. Following a power outage of less than or equal to 15 seconds while acquiring base data, the RDA shall resume acquisition at the interrupted elevation scan as soon as the antenna and transmitter have returned to stable operational conditions. The elevation scan which was in progress at the point of power outage shall be restarted with a full collection of base data, and, thereafter, the remaining portions of the volume coverage shall be completed. For power outages in excess of 15 seconds, the volume coverage shall be restarted.

Additional requirements for the RDA elements are given in the following sections.

3.7.1.2 Performance Characteristics

The RDA shall consist of a coherent Doppler radar capable of operating within a RSEC allocation bandwidth within the 2.7-3.0 GHz frequency band.

The RDA shall be capable of continuous, preprogrammed surveillance to provide reflectivity, mean radial velocity, and spectrum width data.

The data, called base data,* shall meet the requirements defined in this section.

3.7.1.2.1 Coverage

The following sections define the range, velocity, and volume coverage requirements.

3.7.1.2.1.1 Unambiguous Range Coverage

The RDA shall provide quantitative reflectivity estimates over an unambiguous range of 1 km to 460 km. The quantitative reflectivity estimates from 2 km to 230 km shall meet the accuracies specified in Section 3.7.1.2.3.2. The same signal processing scheme shall be used to provide all reflectivity estimates.

---

* Defined in Appendix B.

The RDA shall provide mean radial velocity and spectrum width data processing with the accuracies specified in Section 3.7.1.2.3.1 over the unambiguous range interval of at least 115 km as defined by the following equation:

$$R \text{ (Unambiguous Range)} = \frac{CT_s}{2}$$

where: T_s = Doppler Pulse Repetition Time (PRT)

C = Speed of Light

3.7.1.2.1.2 Velocity Coverage

Velocity de-aliasing to extend the measurement of the mean radial velocity interval to at least twice the Nyquist velocity shall be provided in the NEXRAD System. The Nyquist velocity (V_a) shall be at least 25 ms^{-1}, as given by the following equation:

$$V_a = \pm \frac{8}{4T_s}$$

where: 8 = wavelength

3.7.1.2.1.3 Volume Coverage

The RDA shall provide the capability for a volume coverage defined by a rotated triangular section extending in range from the antenna to the specified range, 360 degrees in azimuth relative to the antenna's rotational axis, and from -1 degree to 45 degrees in elevation relative to the antenna's rotational axis and the horizontal plane at the antenna. However, there is no requirement for coverage above 70,000 feet Mean Sea Level (MSL).

A number of automatic antenna scanning programs shall be provided. One scanning program shall provide, for a volume scan time of five minutes, a sample of the coverage volume. This sample shall consist of 14 unique elevation scan levels, from zero degrees to +20 degrees in elevation, with at least the lowest six degrees of elevation having no gaps between the one-way pattern 3 dB points of adjacent elevation scans. This scan strategy will be designated Scan Strategy 1.

Another scanning program shall provide for a sample of the coverage volume of nine unique elevation angles from zero degrees to +20 degrees in elevation, for a volume scan time of six minutes. The lowest four degrees of elevation shall have no gaps between the one-way pattern 3 dB points of adjacent elevation scans. This scan strategy will be designated Scan Strategy 2.

The scanning rate may vary with elevation, but should be consistent with reasonable dwell times (T_D) for the required system performance for reflectivity and radial velocity data. Additional scan strategies are specified in Appendix I.

3.7.1.2.2 Sample Interval

The following sections define the azimuth and range sample interval requirements.

3.7.1.2.2.1 Azimuth Sample Interval

The RDA shall provide an azimuth sample interval of not greater than one degree.

3.7.1.2.2.2 Range Sample Interval

The RDA shall provide a range sample interval of not greater than 1 km, from 1 km to 230 km, including the effects of range averaging, for reflectivity measurements. The RDA shall provide a range sample interval of not greater than 2 km from 230 km to 460 km for reflectivity measurements.

The RDA shall provide a range sample interval of not greater than 250 meters for mean radial velocity and spectrum width measurements.

3.7.1.2.3 Accuracy and Precision

The following sections define the mean radial velocity, spectrum width, reflectivity, and range accuracy and precision requirements.

The RDA shall provide the capability of operating over a range of dwell times compatible with nominal scan rates of from 0.5 rpm to 3.2 rpm.

3.7.1.2.3.1 Mean Radial Velocity and Spectrum Width

For the range of possible dwell times (T_D) and twice the Nyquist velocities (V_a) in the system, the RDA shall provide estimates of mean radial velocity ($\hat{v}$) and spectrum width ($\hat{\sigma}$) as follows:

1. Mean Radial Velocity

   Accuracy: For a true spectrum width (Note 1) of 4 ms^{-1} the standard deviation in the estimate of the mean radial velocity shall be less than or equal to 1.0 ms^{-1} including quantization errors, for S/N greater than 8 dB.
   Precision: 0.50 ms^{-1} (Note 4)

2. Spectrum Width (Note 2)

   Accuracy: For a true spectrum width of 4 ms^{-1} the standard

---

Note 1: True spectrum width is defined as one standard deviation of the meteorological phenomenon spectrum width within a sampled volume for which the indicated accuracy applies. Stated accuracy values apply for Nyquist velocities of the system. (Gaussian spectrum assumed.)

Note 2: Spectrum widths of 1 to at least 10 ms^{-1} shall be calculated. Spectrum widths larger than 10 ms^{-1} shall be displayed as being 10 ms^{-1}. Significant biases introduced by the computational technique shall be minimized.

Note 3: Not used.

Note 4: Precision is defined as the quantization, the smallest resolvable increment.

deviation in the estimate of the spectrum width shall be less than or equal to 1.0 ms^{-1} including quantization errors, for S/N greater than 10 dB.

Precision: 0.50 ms^{-1} (Note 4)

3.7.1.2.3.2 Reflectivity

For the range of possible dwell times, the RDA shall provide estimates of reflectivity from 2 to 230 km, averaged over 1 km range bins and meeting the following requirements:

Accuracy: 1 dB at S/N $\geq$ 10 dB (Note 3) (including only the error due to meteorological signal fluctuations). Automatic calibration shall reduce system hardware drift errors to less than 1 dB.

Precision: 1 dB (Note 4).

3.7.1.2.3.3 Range

The error in range placement of base data output from the RDA due to timing instabilities shall be less than 50 meters.

3.7.1.2.4 Minimum Detection Capability and Dynamic Range

The RDA minimum detection capability shall provide at least a 0 dB signal to noise ratio for a -7.5 dBZ_e target at 50 km. The effective dynamic range of the RDA shall be at least 93 dB for both reflectivity and velocity data. The RDA shall not make use of RF Sensitivity Time Control (STC).

3.7.1.3 Antenna Assembly

The antenna assembly shall include items such as a mounting pedestal, drive mechanism(s), rotary joint, transmit and receive feed horn, reflector, radome and other items needed to comply with the mechanical and electrical requirements described in this document. The antenna shall be designed to be mounted inside a radome atop a tower. The tower, when required, shall be available in 5 meter height increments,and shall have a maximum height of 30 meters. The antenna shall meet all requirements herein while operating under the environmental conditions defined in Section 3.2.6.

Note 1: Not used.

Note 2: Not Used.

Note 3: Accuracy is defined as one standard deviation (SD) of the estimate, including effects of precision.

Note 4: Precision is defined as the quantization, the smallest resolvable increment.

The antenna performance requirements are derived from the RDA performance requirements contained in Section 3.7.1.2 with the exception of the following specific requirements:

1. Type: Single pencil beam.

2. Antenna Pattern: Median gain* of $\leq$ -10 dBi

3. Half Power Beamwidth in Azimuth and Elevation: $\leq$ 1 degree.

4. Sidelobe Levels: In any plane, the first sidelobe shall be less than or equal to -25 dB relative to the peak of the beam. In the region between $\pm$ 2 and $\pm$ 10 degrees, the sidelobe level shall lie below the straight line connecting -25 dB at $\pm$ 2 degrees and -34 dB at $\pm$ 10 degrees. Between $\pm$ 10 degrees and $\pm$ 180 degrees, the sidelobe envelope shall be less than or equal to -40 dB relative to the peak of the beam. Beyond $\pm$ 10 degrees, the peak of an individual sidelobe may be averaged with the peak of the two nearest sidelobes, one on either side; or with the peaks of the four nearest sidelobes, two on either side, provided that the level of no individual sidelobe exceeds the -40 dB level by more than 6 dB and that the combined angular extent of all peaks exceeding -40 dB does not exceed 30 degrees.

5. Cross Polarization Radiation: In any plane, the cross polarization radiation shall be at or below the level specified for the sidelobe and backlobe levels of the copolarized radiation within the angular regions applicable to these lobes. Within the main lobe angular region, the cross polarization component shall be at least 25 dB below the peak of the main beam of the copolarized radiation.

6. Beam location reporting error $\leq$ 0.15 degrees.

7. Polarization: linear horizontal.

The antenna assembly shall be designed to facilitate removal and replacement of any portion except the antenna reflector, radome, and the pedestal. The antenna assembly shall be constructed to be disassembled and reassembled for maintenance and repair at the top of the antenna tower using tools supplied as a part of this procurement.

The antenna assembly design shall include provisions for routine inspection of critical internal pedestal and drive mechanism parts without disassembly. The design shall allow any maintenance activity to be completed within the repair times defined in Section 3.2.4 (Maintainability).

3.7.1.3.1 Radome

The RDA shall include a rigid radome. The radome shall protect the antenna and pedestal from hazards, hazardous weather, direct wind forces (to reduce antenna structural requirements), and severe weather conditions (to ensure severe weather performance and operation during heavy snow conditions). The radome shall have a surface which precludes rain sheeting and facilitates the prevention of icing and snow buildup.

---

* Defined in Appendix B.

The radome shall incorporate venting; means for closing the vents shall also be provided.

3.7.1.3.1.1 Radome Service Conditions

The radome shall withstand all of the environmental conditions defined in Section 3.2.6.

3.7.1.3.1.2 Radome Radiation Considerations

The radome design shall minimize the effect of radome attenuation, beam distortion, polarization degradation, and sidelobe perturbations due to the radome. These effects shall be minimized for any look angle through the radome used in the operational scanning sequences. The effects of the radome shall be included in meeting the RDA performance requirements. The procedures for performing antenna measurements shall be based on the applicable details of Section 50 of MIL-STD-469.

3.7.1.3.2 Pedestal and Antenna

The pedestal and antenna shall meet the requirements of the following sections.

3.7.1.3.2.1 Pedestal Requirements

The following pedestal requirements shall be met:

1. Type: Elevation over azimuth.

2. Angular limits: Continuous 360 degree rotation in azimuth (both directions) and from -1 degree to +60 degrees in elevation.

3. Rotation rate: Variable between zero degrees per second and 30 degrees per second.

4. Acceleration: At least 15 degrees per second squared (both azimuth and elevation).

5. Deceleration: At least 15 degrees per second squared (both azimuth and elevation)

6. Positioning error, including effects of angular encoding precision: $\pm$ 0.2 degrees (both azimuth and elevation).

7. Angular encoding precision: $\pm$ 0.1 degrees (both azimuth and elevation).

3.7.1.3.2.2 Antenna Mounting

The antenna pedestal shall be designed for installation within the radome.

3.7.1.3.2.3 Antenna Scanning Control

A programmable control of antenna scanning shall be provided. The capability shall be provided for selecting a single scanning strategy to be employed at any given time from a set of up to 8 scan strategies as specified in Appendix I. Any changes to the set of Government specified scan strategies shall only be accomplished through changes issued in

machine readable form by a central Government support facility. A method for controlling and prohibiting unauthorized changes to the scan strategies shall be provided by the contractor. A manual override of the defined strategies shall be available for maintenance actions.

3.7.1.4 Transmitter

The NEXRAD radar equipment shall be governed by the requirements set forth in Section 5.3, Radar Spectrum Engineering Criteria (RSEC) of the Manual of Regulations and Procedures for Federal Radio Frequency Management. (These requirements apply to promote an efficient use of the RF spectrum and are not intended to restrict new design approaches required for attaining performance goals.)

RSEC provisions of Subsection 5.3.3 (Criteria D, subparagraphs 2, 3, 4, 6, and 7) are applicable to all NEXRAD units operating anywhere in the 2.7-3.0 GHz band. In addition, NEXRAD units to be designated by the Government as operating in high density areas shall be subject to the provisions of subparagraphs 9, 9a, and 9b.

An interlock shall be provided which automatically halts RF emissions when an antenna stoppage occurs for a period of thirty seconds or more. Means shall be provided for manually overriding this interlock at the maintenance position. RF emissions shall be halted five minutes (± 10 seconds) from the time that the interlock override is initiated by the operator.

The time for the transmitter to recover from primary power interruptions and outages shall be based on the required klystron heater warmup time. The recovery time, after heater voltage is restored, shall be as follows:

Heater off time (minutes)	Recovery time
Less than 0.5	None
From 0.5 to 5.0	Equal to heater off time
Greater than 5.0	12.0 minutes

Any redundant transmitter configuration (3.2.5 and 3.2.1.5.1) shall include a four port waveguide switch and a high power RF dummy load. The waveguide switch shall be configured to permit maintenance of one transmitter while the second transmitter is fully operational into the antenna. There is no requirement for both transmitters to be operating at the same time while on back-up power. Transmitter RF emissions shall be disabled if the waveguide switch is not positively engaged. The high power RF dummy load shall be capable of operating continuously at full transmitter power without liquid or forced air cooling. Both transmitters shall operate at a single frequency.

3.7.1.4.1 Pulse Repetition Frequency

A technique shall be provided for automated selection on a volume scan basis from a minimum of three different Pulse Repetition Frequencies (PRFs) meeting the operational constraints on unambiguous range interval (Section 3.7.1.2.1.1) and on Nyquist velocity (Section 3.7.1.2.1.2). The PRF selected shall be the one calculated to result in minimum echo area obscuration (relative power is within 10 dB) at the lowest elevation scan. This PRF shall be used during the next volume scan. A manual override for this capability shall be provided at the unit control position.

The set of PRFs available for selection shall be adjustable, on a site-peculiar basis, over a range of at least ± 1%. This will permit the selection of PRFs to allow certain types of receiver interference suppression circuitry to be effective.

The RDA design tradeoffs between the maximum unambiguous range, velocity estimation requirements, and volumetric scanning rate shall determine the set of PRFs for the transmitter.

3.7.1.4.2 Transmitter Maintenance Control and Protection

The design shall include the following transmitter control and protection circuits.

3.7.1.4.2.1 Protective Circuitry

Protective circuitry shall be provided to adequately protect major transmitter components from damage. This circuitry should include, but not be limited to, sensing, control and visual indication (with memory) at the RDA maintenance position of malfunctions in the following parameters. Status messages for these parameters shall be sent to the unit control position:

1. Modulator Module Failure
2. Waveguide Arcing
3. HV Over-Current
4. Modulator Overload
5. Waveguide Air Pressure
6. Waveguide Air Humidity
7. RF Output Tube Temperature
8. Coolant Flow
9. High Voltage Standing Wave Ratio

3.7.1.4.2.2 Maintenance Controls

Principal maintenance and tuning controls shall be provided on the interior front panel of the transmitter/modulator so that optimum operation may be obtained in a minimum of time. The capability shall be provided to manually select the frequency and PRF and to provide manual control of the RDA for maintenance purposes.

3.7.1.5 Receiver

The receiver unit shall be a stable, sensitive, wide dynamic range matched filter receiver providing a flexibility to accept a variety of interference rejection filters. The receiver characteristics, such as selectivity, spurious responses, image rejection, and local oscillator radiation, shall be in accordance with specifications in subparagraph 8 of the Manual of Regulations and Procedures for Federal Radio Frequency Management, RSEC Subsection 5.3.3 (Criteria D) for NEXRAD Units operating anywhere in the 2.7-3.0 GHz band. The receiver shall also be capable of complying with subparagraphs 9 and 9c, covering field

incorporation of provisions to suppress pulsed interference in NEXRAD Units which operate in high density areas to be designated by the Government.

3.7.1.6 Signal Processing Capability

Doppler radar output data shall be processed to provide estimates of reflectivity, mean radial velocity, and spectrum width. These estimates shall meet the requirements defined in Section 3.7.1.2. In addition, the processor shall be capable of estimating reflectivity and velocity at signal-to-noise ratios down to and including -3 dB. The Z, V, and W estimates shall be discarded when the corresponding signal-to-noise ratio (SNR) is less than a set threshold value. Independent threshold values shall be used for the three estimates (Z, V, W) and a separate set of threshold values shall be used for each scan strategy and each scan rate used. All threshold values shall be adaptable at the UCP, in increments of 0.5 dB, over a range of SNR's of at least -10 dB to +10 dB. Outbound radial velocities shall be defined as positive velocities and inbound radial velocities shall be defined as negative velocities.

3.7.1.7 Ground Clutter Suppression

The objective of the ground clutter suppression capability is to improve the measurement of weather return parameters in the presence of clutter. Clutter suppression is defined as the ratio of clutter input to clutter output, normalized to filter noise gain.

Clutter suppression performance is described by the improvement in the ability to measure weather return parameters from a Gaussian random process weather model in the presence of two different clutter models. Clutter model A is a Gaussian random process with a Gaussian spectrum centered at zero mean velocity. The clutter rms spectrum width is the root sum square of 0.1 ms^{-1} plus the rms spectrum width resulting from the antenna rotation rate at the lowest two elevation angles. Clutter Model B represents a scattering echo from a point target and consists of a complex wave form with an amplitude envelope which is an approximation of the two-way antenna pattern.

3.7.1.7.1 Ground Clutter Suppression Requirements

The RDA shall provide ground clutter suppression capability of at least 30 dB in the reflectivity channel, and shall provide ground clutter suppression capability for the Doppler channels which meets the requirements shown in Table 3-7 for mean radial velocity (V) and spectrum width (W). In areas where the clutter suppression is not applied, there shall be no degradation in the weather return parameter measurement accuracy with respect to sections 3.7.1.2.3.1 and 3.7.1.2.3.2.

For testing purposes:

1. Ground clutter suppression performance shall be measured at a nominal frequency of 2.8 GHz.

TABLE 3-7 CLUTTER SUPPRESSION REQUIREMENTS FOR MEAN RADIAL VELOCITY AND SPECTRUM WIDTH ESTIMATES

	Required Ground Clutter Suppression Capability (I) in dB (Spectrum Width = 4 ms^{-1})	
Minimum Usable Mean Radial Velocity, V_{min} in ms^{-1} (see Sec. 3.7.1.7.2)	Clutter Model A	Clutter Model B
2	20	20
3	28	30
4	50	50

2. Ground clutter suppression requirements shall be met when implemented for the lowest two elevation scans on both scan strategies 1 and 2 (see Appendix I).

If clutter suppression is accomplished by a linear time invariant filter followed by a conventional weather return parameter estimation process such as a pulse pair algorithm, the clutter rejection performance is the ratio of filter input power to filter output power for each of the two clutter models, as illustrated in Figure 3-6.

A minimum capability shall be provided to:

1. Select one of the three levels of Doppler clutter suppression capability from Table 3-7.

2. Generate a site-peculiar elevation-angle-independent clutter suppression map which specifies the ranges and azimuths to be used for clutter suppression. This map applies to both Doppler and reflectivity clutter suppression.

3. Specify at which elevation angles the map above is to be used.

Capability shall be provided to modify, through adaptation data via the unit control position (UCP), the selections in 1, 2, and 3 above. In addition, capability shall be provided for Government access to the clutter suppression control lines.

3.7.1.7.2 Clutter-related Estimate Errors

ln the presence of clutter, weather return parameter estimate errors are due to the following two components:

1. An error results from undesired effects on the weather returns due to the introduction of the clutter suppression device. Bias error contributions by the clutter suppression device to the reflectivity estimates shall be less than or equal to the values given in Table 3-8. Bias and standard deviation contributions by the clutter suppression device to the mean radial velocity and spectrum width estimates shall each be less than 2 ms^{-1} for mean radial velocities greater than or equal to the minimum usable mean radial velocity, V_{min}, for the following conditions:

   a. Clutter suppression capability selected from Table 3-7.
   b. Input signal-to-noise ratio of at least 20 dB.
   c. Input signal-to-clutter ratio of at least 30 dB.
   d. A spectrum width of 4 ms^{-1}.

2. An additional error results from the clutter residue (which is a function of the signal-to-clutter ratio at the output of the filter). With the clutter suppression device operating and a spectrum width equal to or greater than 4 ms^{-1}, the expected bias error in the reflectivity estimate due to the clutter residue shall be less than 1.0 dB for an output signal-to-clutter ratio of 10 dB.

   The contribution of the clutter residue to the bias error for the mean radial velocity estimate shall be equal to or less than 1 ms^{-1} for the following conditions:

   a. Output signal-to-clutter ratio of 11 dB.
   b. Clutter model A (see Section 3.7.1.7).
   c. $V = (V_a/2)$ (where V_a is the Nyquist velocity).
   d. $W = 4\ ms^{-1}$.

   The contribution of the clutter residue to the bias error for the spectrum width estimate shall be equal to or less than 1 ms^{-1} for the following conditions:

   a. Output signal-to-clutter ratio of 15 dB.
   b. Clutter model A.
   c. $V = (V_a/2)$.
   d. $W = 4\ ms^{-1}$.

3.7.1.8 Control Functions

The RDA shall include all hardware and software necessary for operational control and monitoring of the RDA functional area.

The RDA control capability shall support performing cold startup, restart, warm startup and control commands. The RDA control capability shall also support the running of off-line diagnostics as defined in Section 3.7.6.1.4.

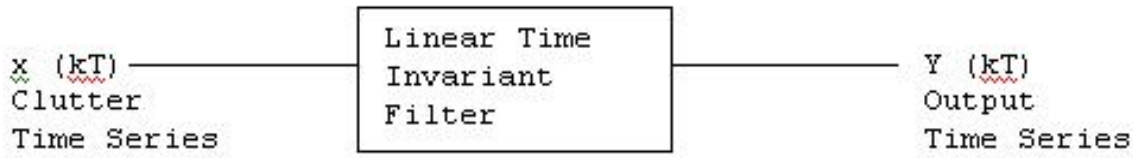

T = Pulse Repetition Time

Clutter Model	Algorithm for Computing Clutter Suppression Capability: I
A	$I = 10 \log_{10} [\langle\lvert x(kT)\rvert^2\rangle / \langle\lvert y(kT)\rvert^2\rangle]$
B	$I = 10 \log_{10} [\max\langle\lvert x(kT)\rvert^2\rangle / \max\langle\lvert y(kT)\rvert^2\rangle]$

< > represents the value of the time average over a moving window as the antenna scans past a point target. The window time duration shall correspond to the appropriate weather parameter estimation interval. The scan rate assumed should be that used on the lowest two elevations.

| | represents absolute value.

FIGURE 3-6 CLUTTER SUPPRESSION CAPABILITY CHARACTERIZATION FOR LINEAR TIME INVARIANT CLUTTER FILTERING

TABLE 3-8 MAXIMUM ALLOWABLE BIAS IN REFLECTIVITY ESTIMATES DUE TO THE CLUTTER SUPPRESSION DEVICE

Weather Spectrum Width (W) (ms^{-1})	Maximum Allowable Bias in Reflectivity Estimate (dB)*
1	10
2	2
$\geq$ 3	1

* Note: This bias is measured with an input S/C of at least 30 dB. It applies for all mean radial velocities (V) and shall be systematic, i.e., predictable from mean radial velocity and spectrum width parameters of the Gaussian random process weather model.

3.7.1.8.1 Cold Startup

The cold startup function of the RDA functional area shall provide the capability to start up the RDA either initially or after a failure requiring maintenance action to be taken at the RDA. The cold startup function shall provide all control signals and other information related to the start of operation. The RDA cold startup procedure shall be initiated from the maintenance position. The entire cold startup procedure shall be capable of being completed within the time specified in Table 3-4 while minimizing to the extent feasible the number and complexity of operator actions.

During the cold startup procedure, it shall be possible to allow or inhibit data transfer from the RDA to the RPG functional area. During the cold startup, data shall be available within the RDA at the maintenance position or other suitable position for test and adjustment purposes. It shall be possible to initiate sending data to the RPG, if it was inhibited during the cold startup procedure, without repeating any of the cold startup procedure.

3.7.1.8.2 Restart and Warm Startup

The restart function and the warm startup function shall provide the capability to restart the RDA as a result of a restart action, the detection of a transient error condition, or a manual or automatic equipment substitution action if redundant or standby equipment is provided. The restart and warm startup procedures shall not require the presence of an operator at the RDA except when initiated by manual action at the RDA. The warm startup function shall provide both local control (RDA) and remote control over startup functions such as antenna rotation startup and transmitter startup. The restart and warm startup procedures shall be logical subsets of the cold startup procedure. The restart and warm startup procedures shall be capable of being performed by one person within the time specified in Table 3-4.

An RDA warm startup response time shall be measured from the initiation of the warm startup control command from the unit control position or the RDA maintenance position until the RDA is operational, the RDA to RPG interface is reestablished and valid data transfer to the RPG has begun.

An RDA restart response time shall be measured from the initiation of the restart control command (issued from the unit control position or the RDA maintenance position) or from the detection of an error condition requiring an RDA restart, until the RDA is operational, the RDA to RPG interface is reestablished, and valid data transfer to the RPG has begun. An RDA restart shall include an RDA warm startup procedure.

3.7.1.8.3 Control Commands

The RDA shall provide control commands for various adjustments, operational conditions, and operational parameters. The control commands shall be accepted from both the maintenance position associated with the RDA and the unit control position (see Section 3.7.2.5).

At a minimum, control commands shall be provided for the following functions:

1. RDA Shutdown. This command shall provide an orderly, controlled, manually initiated shutdown of the RDA to a state from which a warm startup may be performed.

2. RDA Warm Startup. This command shall provide the capability to resume the RDA operation from the warm startup state.

3. RDA Restart. This command shall provide the capability to initiate an RDA restart from the unit control position.

4. Stop/Start Data Transmission. This command shall provide the capability to start or stop the transmission of base data from the RDA to the RPG. Parameters of this command shall allow selection of the reflectivity, mean radial velocity, and spectrum width data.

5. Set RDA Mode Control. This command shall provide for changing RDA Modes by selecting various RDA parameter sets. The parameter sets which may be selected are the following:

   a. Mode Control: Operational/Maintenance

   b. Operational Modes: A, B, and others specified in Appendix I

6. Readout Status Parameters. This command shall provide the capability to output selected or all RDA parameters to the requesting maintenance or unit control position.

3.7.1.9 Monitoring and Error Detection Capability

The RDA shall include a capability for equipment monitoring and reporting the status of radar functions to the RDA maintenance position and the unit control position. This capability shall provide the RPG and PUP with RDA status, including a positive indication that the RDA is operating within all specification parameters. The RDA equipment shall

include built-in test equipment to provide a combination of on-line and off-line status monitoring and self test to support system operation and fault isolation to the degree required to meet the system maintainability and availability requirements.

The RDA shall include the capability of monitoring the performance of selected functions on a noninterfering basis with the processing of on-line data and perform sufficient tests to ascertain that no degradation in operation has occurred. The following are typical of the parameters required to be monitored (a complete list will be dependent on the RDA equipment proposed):

1. Average Transmitter Power (at feed horn)
2. Receiver Sensitivity and Gain
3. Waveguide Arcing
4. Pulse Repetition Frequency
5. Memory Checks
6. Signal Processor Performance
7. A/D Converter Performance
8. Timing Controls
9. Over/Under Voltages
10. Over/Under Currents
11. Over Temperature
12. Air Flow Failures
13. Pedestal Oil Level
14. Radar Data Output
15. Backup Power

If appropriate, an Overload Warning Threshold adaptation parameter shall define the utilization level that, when reached or exceeded, will result in an overload warning being issued. Typical overload types include processor, memory, communication interfaces, input data buffers, mass storage, and archival storage utilizations.

If appropriate, a Task Overload Shedding Priority adaptation parameter shall define the order for deleting (not performing) processing tasks when an overload situation occurs. Processing tasks shall be reactivated following elimination of the overload condition in the reverse of the shedding order. Task reactivation shall be performed in a manner so as not to allow a rapid cycling between overload and non-overload conditions.

Alarms shall be provided for RDA conditions which might result in further equipment problems or failures if the indicated condition is not corrected. This shall include the case when the automatic radar calibration function can no longer maintain performance parameters

within specification limits. All alarms shall drive indicators on individual units, where appropriate, and at the maintenance position in the RDA, and shall result in alarm messages being sent to the unit control position, with further dissemination as defined in Section 3.7.2.6.

3.7.1.10 Display Functions

The RDA shall include a capability to display radar data for purposes of system monitoring, maintenance, and adjustment. The design shall include displays, meters, and indicators as necessary for maintenance.

3.7.1.11 Calibration

The RDA shall, during each volumetric scan sequence, automatically perform the calibration measurements defined in this section and automatically correct the base data. The calibration data and parameters shall accompany products for applications by the users at all levels of data processing. A manual override of the automatic calibration shall be provided from both the RDA maintenance position and from the unit control position.

The quantitative measures of RDA performance shall be incorporated into the digital information provided to the unit control position and shall be available as a visual indicator at the RDA maintenance position. The calibration measurements which shall be included are the following:

1. A measurement of the average transmitted power level.

2. A calibration of the RDA reflectivity channel from the channel's first active device through the signal processor. This calibration shall be timed to correspond to regions of space devoid of both ground clutter and weather echoes. The calibration shall be performed over at least two widely spaced received power levels, and the calibration signals shall undergo the same averaging as the weather echoes.

3. The mean radial velocity and spectrum width processing performance shall be monitored. This monitoring function shall be timed to correspond to regions of space devoid of both ground clutter and weather echoes, and shall include at least one known value of mean radial velocity and spectrum width at one range cell.

3.7.1.12 Set-up Mode

The RDA shall include the capability to measure and monitor the following parameters:

1. Transmitter frequency

2. Peak transmitted power

3. Transmitted pulse shape

4. Transmitted pulse width

5. Pulse repetition interval

6. Receiver calibration over entire dynamic range

7. Mean radial velocity and spectrum width computation over entire Nyquist interval

8. Complex spectrum in at least one range cell that is controllable over the entire system PRF with the number of samples being variable from 32 to 512 in power of 2 increments.

3.7.1.13 Archiving Interface Connections

The RDA shall provide interface connections to allow archive data to be obtained. The Archive I data shall be the output of the receiver (analog time-domain data). The Archive II data shall be the output of the signal processor (digital base data and status information). Synchronization, calibration, and other data required to properly interpret the archive data, including date, time, antenna position, status, etc., shall be available at the Archive I and Archive II interface connections.

3.7.1.13.1 Archive II Equipment

At selected sites, the contractor shall provide all of the hardware and software necessary to perform the Archive II function including a permanent and easily transportable recording/archiving medium. The RDA shall also have the capability to ingest, from the archive system, data previously archived by any RDA. One individual physical archive package shall be capable of storing at least 3 hours worth of real time base data and related information using the A1 scan strategy. Starting and stopping of the Archive II equipment shall be controllable from the UCP. The Archive II equipment shall be packaged in a stand-alone equipment rack or chassis.

3.7.1.14 Base Data Interface

The RDA shall provide for one interface for the purpose of providing real-time base data to a user site. This interface shall be independent of any interface needed for transmission of base data to an RPG. The specification of this interface is left to the contractor.

3.7.2 Radar Product Generation Functional Area

The Radar Product Generation (RPG) functional area uses base data received from the Radar Data Acquisition (RDA) functional area (either directly or via the Communications functional area) to generate a set of products which contains information concerning the following meteorological phenomena:

1. Precipitation

2. Wind and Wind Shear

3. Tornadoes

4. Fronts and Fine Lines

5. Tropical Cyclones

6. Mesocyclones

7. Thunderstorms

8. Turbulence

9. Icing Conditions

10. Hail

11. Freezing/Melting Level

The products are then distributed to the Principal User Processing (PUP) functional area and to other users.

The RPG shall be capable of accepting, storing, and processing data for differing numbers of elevation scans and scan rates including 14 elevation scans from zero degrees to +20 degrees in a volume scan time of five minutes.

The RPG shall provide for one interface for real-time distribution of base data to a user site. The specification of this interface is left to the contractor.

It shall be possible to perform RPG functions in either a fully automated or a manually aided mode. In a fully automated mode the RPG shall be capable of being operated unmanned. Any performance limitations associated with a fully automated operation shall be subject to Government approval.

The RPG functional area comprises the following capabilities:

1. Product Generation

2. Product Storage

3. Product Distribution

4. Display and Data Entry

5. Control

6. Status Monitoring and Error Detection

7. Archiving

8. Hydrometeorological Processing

9. Alert Processing

The hardware to implement capabilities 4, 7, and 8 may not be provided at all sites. Tables and/or equipment stands shall be provided to support all display, data entry, and control equipment.

3.7.2.1 Product Generation

Base data shall be used to detect and measure meteorological phenomena based on Government supplied algorithms. The algorithms are defined in Appendix C.

The contractor shall implement the Government supplied algorithms in an easily changeable manner, based on his system design.

The RPG shall produce the following types of products:

1. Base Products*
2. Derived Products*
3. Alphanumeric Products*
4. Derived Data Arrays*

The products are defined in Appendix E.

Each product shall include the data observation time or integration period; the date and time at which it was generated; and the elevation angle, azimuth, geographic area, resolution information, and other meteorological annotation data as appropriate to the generated product. Products shall be generated such that they can be displayed either with or without the meteorological annotation data. All times displayed or included in products shall be expressed as Greenwich Mean Time (GMT). All distances to be numerically displayed or included in products shall be expressed in nautical miles, all altitudes in feet, and all speeds in knots.

Presentation of base products and derived products to operational personnel assumes the use of a color graphic display. Presentation of alphanumeric products does not require this capability.

3.7.2.1.1 Base Products

Base products shall provide reflectivity estimates for each elevation angle to a range of 460 km. Base products shall provide mean radial velocity and spectrum width estimates for each elevation angle to a range of 230 km. The highest resolution provided in a base product shall be equal to the resolution available from the base data.

These products shall be displayed as a vertical projection onto the earth's surface, e.g., 100 km at 20° shall be displayed at approximately 94 km. For a given coverage area (see Table E-1), each elevation scan shall be displayed at the same geographic scale relative to the earth's surface.

A technique shall be provided to present the mean radial velocity and spectrum width data at the correct range (range unfolding). Data significantly contaminated due to overlaid weather echoes or ground clutter shall be identified.

3.7.2.1.2 Derived Products

Derived products shall provide users with access to large volumes and varieties of data in easily displayable formats. These large volumes of data shall be concentrated into easily interpretable products which may include annotations (added either automatically as a result of an algorithm, or manually) to identify specific meteorological phenomena. The annotations, which include alphanumeric data, special symbol data and line segments, shall be nondestructive of the data and shall remain a part of the product unless they are removed by manual action.

---

* Defined in Appendix B.

Products not requiring manual annotations shall not be delayed by a manual annotation function which may be required for other products. Derived products may also be used for further processing by a user.

3.7.2.1.3 Alphanumeric Products

Alphanumeric products shall provide weather information in a form suitable for display on both graphic and alphanumeric display devices. This information shall include alert messages, summary data, and free text messages.

3.7.2.1.4 Derived Data Array Products

Derived data array products shall provide information in a form suitable for transmission to and processing in a system external to the NEXRAD System. These products are not in a displayable format.

3.7.2.2 Product Storage

The RPG shall provide the capability for on-line storage of all products. The RPG shall provide the capability for defining and changing the product mix and retention time (up to a maximum of six hours) for products to be retained in the on-line RPG storage. This capability shall be controlled by input from the unit control position by means of adaptation data. Products stored within the RPG on-line storage shall not be capable of being altered from a PUP, nor by input from any principal user or other user interface.

The RPG on-line storage of products shall be capable of storing for 1.5 hours the full load product mix (excluding Derived Data Arrays) defined in Table E-1.

3.7.2.3 Product Distribution

Each RPG shall make products available for distribution to the principal and other users, including the following:

1. Associated PUPs.
2. Non-associated PUPs.
3. FAA ARTCCs for which the RDA provides coverage.
4. NWS RFCs for which the RDA provides coverage.
5. Other users.
6. Principal User External Systems.

The number of sites to which an RPG must be capable of distributing products shall be limited only by the limits shown in Para. 3.7.2.5.13.

3.7.2.3.1 Distribution to an Associated PUP

For each associated PUP, the RPG shall provide those products requested by the PUP, including both products to be sent on a routine basis and products requested on a one-time basis. Products generated because alert criteria were met shall be transmitted to the requesting operational position prior to all other products defined for transmission to that operational position. Different associated PUPs

may request different product sets for routine receipt from an RPG. The distribution of products shall satisfy the users' frequency and priority requirements within the constraints of available communications bandwidth. All products stored on-line within the RPG shall be available to any associated PUP. Any product which has not been generated prior to the receipt of a request (e.g., cross section) shall be generated and distributed. The RPG shall support on-line requests for changes and additions to the set of products routinely sent to an associated PUP. It shall also support on-line changes to their frequency or priority.

3.7.2.3.2 Distribution to Non-associated PUPs

Each RPG shall be capable of providing products to any PUP in response to a one-time request (i.e., dial-up) from the PUP. The specific products available for distribution to non-associated PUPs shall be controlled by adaptation data.

3.7.2.3.3 Distribution to FAA ARTCCs

Each RPG shall provide products on a routine basis to those ARTCCs selected by the FAA, referred to herein as associated ARTCCs. Different associated ARTCCs may request different product sets for routine receipt from a particular RPG. Each RPG shall also provide any ARTCC with products it has requested on a one-time basis. All products available for distribution to associated PUPs (see Section 3.7.2.3.1) shall also be available for distribution to associated ARTCCs. The distribution of products to ARTCCs shall satisfy the FAA's frequency and priority requirements within the constraint of available communications bandwidth. The RPG shall also support on-line requests for changes and additions to the set of products routinely sent to an associated ARTCC, and to their frequency and priority.

3.7.2.3.4 Distribution to NWS RFCs

The RPG shall provide derived data array precipitation products to the RFC for which that RDA provides coverage within the RFC's area of responsibility. Each RFC may choose products from any RPG within its area of responsibility via dial-up requests.

3.7.2.3.5 Distribution to Other Users

Each RPG shall be capable of providing selected products to other users. The capability shall be provided at the UCP to independently select the distribution method to be used for each Class IV port at the RPG. The available distribution methods shall include as a minimum: a single set of products, single product(s) repeatedly transmitted, and selection from a limited menu of products entered at the UCP.

3.7.2.3.6 Distribution to Principal User External Systems

Each RPG shall be capable of providing products controlled by adaptation data to external systems of the principal users.

3.7.2.4 Operational Position Capabilities

For selected NEXRAD Units, the RPG shall include a collocated operational position. The RPG operational position shall include the same display, data entry, and hard copy equipment and provide the

same functional capabilities as defined in Sections 3.7.3.1 through 3.7.3.8.

The interface from an RPG to an RPGOP shall exchange data at no less than 56,000 bits per second, full duplex. In all other respects, this interface shall conform to the requirements specified for Class I lines in Appendix A, NEXRAD Interface Control Document.

3.7.2.5 Control Capabilities

Control capabilities shall provide for operation of the NEXRAD Unit. These include:

1. RPG Startup
2. RPG Restart
3. RDA Restart and Warm Startup
4. User Interface Establishment
5. Controlled Shutdown
6. RDA Mode Control
7. Manual Reconfiguration
8. Archiving Control
9. Product Generation Control
10. Product Storage Control
11. Adaptation Control
12. Backup Power Control
13. Communication Line Configuration
14. Redundant Channel Control
15. Other User Distribution

To perform the control functions, a unit control position which contains suitable display and data entry equipment shall be provided. Control commands entered from this equipment shall be executed within the RPG. Provisions shall be made to limit the access to selected classes of control functions through passwords or other suitable means as approved by the Government. At least two levels of protection shall be provided. The unit control position shall be capable of being located remotely from the remaining RPG equipment via a dedicated communications line.

The dedicated communications line to a remotely located unit control position shall have a data rate of no less than 4800 bits per second and shall have a contractor specified and Government approved protocol or equipment which shall contain error detection/correction capability to ensure reliable transmission of commands and status information. Error detection capability similar to the LAPB polynomial is considered minimally acceptable. This interface is not required to fall into any of the five defined NEXRAD communication classes.

No combination of errors in operator input shall require a restart (see Section 3.7.2.5.2) for recovery. Invalid commands shall result in an appropriate English language error message being provided at the unit control position.

3.7.2.5.1 RPG Startup

An RPG startup capability shall be provided to initiate the operation of the RPG without any concern for the current state of the remainder of the NEXRAD Unit. RPG startup shall be used to initiate RPG operation when the NEXRAD Unit is first put into operation or after the RPG has been down for an extended period (greater than one hour). It shall also be used after system failures which make it impossible to recover any data present at the time of the failure. RPG startup shall also be used when the RPG restart function (see Section 3.7.2.5.2) fails to operate properly.

RPG startup shall be accomplished within the time specified in Table 3-4.

During RPG startup it shall be possible to specify either a test mode or an operational mode of operation. In the test mode, data from the RDA shall be presented at the operational position (if one is provided as part of the RPG) for test and monitoring purposes. However, in the test mode, operational data shall not be forwarded to a PUP or any other user. Changing from the test mode to the operational mode shall be possible without repeating the full RPG startup procedure.

The RPG startup capabilities shall include:

1. Initialization of RPG equipment, firmware, and software.
2. Initialization of all clocks and internal timers.
3. Establishing of the interface with the RDA (if operating).
4. Verification of the configuration.

When entering the operational mode, the following capabilities shall also be provided:

1. Establishing interfaces with all applicable principal users.
2. Verification of the operational mode configuration.
3. Notification to principal users that the system is available.

3.7.2.5.2 RPG Restart

An RPG restart capability shall be provided to restore the previous state of the RPG after a failure from which recovery is possible without maintenance action. RPG restart shall also be capable of being performed automatically. RPG restart shall be performed when the RPG experiences non-catastrophic failures,* power interruptions of less than one minute, and other such failures.

---

* Defined in Appendix B (see Catastrophic Failure).

An RPG restart shall be accomplished within the time specified in Table 3-4 (except for the initiation action in the case of a manually initiated RPG restart).

The RPG restart capabilities shall include:

1. Automatic reboot of the system software (if necessary).

2. Restoration to the operating state (e.g., scan mode, product menus, adaptation data, etc.) existing when service was interrupted.

3. Re-initialization of all clocks and internal timers.

4. Reestablishing of the interface with the RDA (if operating).

5. Reestablishing of interfaces with all applicable users.

6. Verification of the configuration.

7. Notification to the users that the system is again available.

8. Notification to users of potentially degraded data.

3.7.2.5.3 RDA Restart and Warm Startup

An RDA restart and warm startup capability shall be provided. It shall include those restart and warm startup functions defined in Section 3.7.1.8.2 which can be performed at a location remote from the RDA. It shall also include reestablishing of the interface of the RPG with its RDA.

3.7.2.5.4 User Interface Establishment

The capability shall be provided to establish (or reestablish) any dedicated RPG interface with an associated PUP or ARTCC.

3.7.2.5.5 Controlled Shutdown

The capability shall be provided to shut down in a controlled manner the following parts of the system:

1. The RDA, including the RDA interface.

2. The communications links with one or more PUPs, PUESs, or other users.

3. The RPG.

A controlled shutdown of the RDA shall return it to a state from which an RDA warm startup may be performed. It shall terminate the receipt by the RPG of radar data from the RDA. A controlled shutdown of the RDA shall also result in notification of associated PUPs and other users of the shutdown, but shall not affect system capabilities related to sending existing products to the users.

The controlled shutdown of a user interface (e.g., one with an associated PUP) shall not affect the ability of the user to operate

using previously provided products, nor shall it affect other interfaces.

The controlled shutdown of the RPG shall include the controlled shutdown of the RDA to a state from which an RDA warm startup may be performed, the controlled shutdown of all user interfaces, and the return of the RPG to a condition from which an RPG startup is required to resume operation.

3.7.2.5.6 RDA Mode Control

The capability shall be provided to change parameters of the RDA. This shall include all parameters defined in Section 3.7.1.8.3.

3.7.2.5.7 Manual Reconfiguration

The capability shall be provided to manually reconfigure RPG equipment.

3.7.2.5.8 Archiving Control

The capability shall be provided to activate or deactivate the archiving function, and to select the product types to be routinely archived and their frequency of archiving. The capability shall also be provided to select products stored within the RPG for archiving on a one-time basis.

3.7.2.5.9 Product Generation Control

The capability shall be provided to select the set of products to be routinely generated. Routine products are those that have been selected for routine receipt by any associated PUP or the RPG operational position. In addition, the capability shall be provided to specify, on a per product basis, the frequency at which the product is generated.

The RPG shall be capable of generating one product for each of the alert categories (See Appendix J) for which alert conditions are met in any of the operators' selected alert areas. The product shall be automatically sent to the associated operational position(s) whose alert areas are affected and who have requested the automatic product. The product selected for generation for each alert category shall be an adaptable parameter at the RPG.

The RPG shall generate products in response to one-time product requests even when: a) parameter values for meteorological phenomena have not been met, and when: b) the product has not been selected for routine generation.

3.7.2.5.10 Product Storage Control

The capability shall be provided to select or change the set of product types to be stored in the on-line storage. In addition, the capability shall be provided to specify, on a per product basis, the frequency at which the product is stored and the storage time period (maximum of 6 hours).

3.7.2.5.11 Adaptation Control

The capability shall be provided to select or change additional adaptation parameter values. Examples of parameters which are adaptable are described in Appendix H.

3.7.2.5.12 Backup Power Control

The capability shall be provided to initiate switchover between commercial and backup power for all NEXRAD equipment located at the Radar site.

3.7.2.5.13 Communication Line Configuration

It shall be possible to configure or reconfigure any narrowband communication port to connect to and communicate with any of the NEXRAD communication classes available. This configuration shall be accomplished solely via adaptation data and with the installation of the proper operating system and communications equipment. The maximum number of ports (based on 9.6 kbps/port) is limited by the RPG aggregate data rate of 288 kbps, expandable to at least 441.6 kbps. The maximum number of ports and the number of ports that may be configured for each class shall be provided as shown below:

Ports	Unexpanded Limits	Expanded Limits
Maximum	30	46
Class 1	25	40
Class 2	25	40
Class 3	4	4
Class 4	4	4
Class 5	2	2

3.7.2.5.14 Redundant Channel Control

The capability to control the state (standby or operation) of the redundant channels of 3.2.1.5.1 shall be provided.

3.7.2.5.15 Other User Distribution

It shall be possible to select the method of product distribution for each Class IV port. The possible methods shall be as required by NTR 3.7.2.3.5.

3.7.2.6 Status Monitoring and Error Detection

The capability shall be provided at the unit control position to monitor the status of the RDA, the RPG, the associated PUPs, and each communications interface. This status monitoring capability shall include operational modes, conditions, and parameters, as well as error conditions. Alarm messages received by the unit control position shall be considered status messages for the purposes of further dissemination. A descriptive English language message shall be provided at the unit control position: (a) when requested at the unit control position; (b) periodically, as specified at the unit control position; and (c) when there is a change in the status of the RDA, the RPG, an associated PUP, or any of the NEXRAD Unit communications interfaces.

A descriptive English language message shall be provided at the

associated PUPs and ARTCC: (a) when requested, (b) periodically as specified at the PUPs or ARTCC, and (c) when there is a change in the status of the RDA or RPG.

The capability shall be provided to detect and record all status messages and hardware and software errors. A descriptive English language message shall be provided to the unit control position and a permanent record of the message shall be kept. A capability to add a hardcopy device for the recording of all status and error messages shall be provided.

The capability shall be provided at the unit control position to turn on or turn off status monitoring and error detection messages. This capability shall be provided individually for the RPG itself, each of its configuration items, the interfacing RDA, each associated PUP, and each of its communications interfaces.

An Overload Warning Threshold adaptation parameter shall define the utilization level that, when reached or exceeded, will result in an overload warning being issued. Overload types include as a minimum: processor, memory, communication interfaces, input data buffers, mass storage, and archival storage utilizations.

A Task Overload Shedding Priority adaptation parameter shall define the order for deleting (not performing) processing tasks when an overload situation occurs.

Processing tasks shall be reactivated following elimination of the overload condition in the reverse of the shedding order. Task reactivation shall be performed in a manner so as not to allow a rapid cycling between an overload and non-overload condition to occur.

A Product Overload Shedding/Recovery Priority adaptation parameter shall define the order for deleting products when an overload situation occurs on an interface between functional areas, or an interface between a functional area and an external user's system. The recovery from an overload condition shall be performed automatically as soon as conditions allow. Products shall be recovered in the reverse of the shedding order.

3.7.2.7 Archiving

The capability shall be provided within the RPG to generate the archive record of background maps and selected products, on a permanent and easily transportable medium. This is defined as Archive III. The RPG shall have the capability to ingest, from the archive medium, products previously archived by any RPG or PUP for processing or display. The capability shall be provided to display archived RPG or PUP status messages on the UCP. The individual physical archive medium shall be capable of storing at least 168 hours worth of the full load archiving product mix as defined in Table E-1. Selection of product types to be archived and the frequency of archiving shall be made by manual action from the Unit Control Position, as discussed in Section 3.7.2.5.8. The capability shall be provided to select continuous status message archiving.

3.7.2.8 Hydrometeorological Processing

Real-time quantitative rainfall estimates shall be generated and made available for flash flood warning and to prepare rainfall-related

products for transmission to WSOs, WSFOs and RFCs.

Hydrometeorological processing requires rain gage data for quality control of rainfall estimates. Based on Government-supplied criteria as defined by the Precipitation Detection Function in Appendix D, a NEXRAD Unit shall initiate collection of rain gage data by calling not more than two Rain Gage Data Acquisition Computers. The data will be sent to the NEXRAD Unit once per hour by each Rain Gage Data Acquisition Computer which was initially called.

The number of telemetered rain gages available per radar will not exceed 50, distributed over the surveillance area. Data from a maximum of 30 gages shall be used for quality control of the processing. If more than 30 gages received rain during the previous hour, Government-supplied criteria, as defined by the Rain Gage Data Acquisition Function in Appendix D, shall be used to select the rain gages to provide data for the processing.

3.7.2.9 Alert Processing

The RPG shall generate alert outputs based upon identified meteorological phenomena occurring or projected to occur in alert areas defined by each associated operational position. Each alert area shall be definable within the range of coverage (See Appendix J) on a grid divided into squares of no larger than 16 X 16 km.

The RPG shall be capable of generating alerts for all categories of phenomena identified in Appendix J. The categories of Group "a." are ones that have different data for each grid square. The coarsest resolution product available may be used to generate these data. The categories of Group "b." are based on volume data and use the algorithm outputs. The categories of Group "c." are a subset of "b." but shall alert based on levels or phenomena projected to occur in an alert area according to the forecast motion of the storm centroid(s). For each alert area, the operator may choose up to 10 categories to alert on.

There shall be one set of thresholding criteria for each alert category as outlined in Appendix J. The values used in the thresholding criteria shall be part of the adaptation data. All criteria shall be set up as greater than or equal to the value selected. When an alert condition has been detected, an alert message shall be transmitted to the appropriate operational position(s). The alert message shall contain the alert area location and a brief description of the alert criteria. For those alerts that are storm related (i.e., Groups b and c, Appendix J, except for VAD and rainfall accumulation) the storm ID shall also be provided.

The capability for additional categories shall be provided in the amounts listed in Appendix J.

3.7.3 Principal User Processing Functional Area

The Principal User Processing (PUP) functional area shall provide the products of a NEXRAD Unit to its principal users based on information received from the RPG functional area.

The PUP functional area includes display and data entry equipment which

shall provide the capabilities as specified in Section 3.7.3.1. It also includes the following functional capabilities as specified in Sections 3.7.3.2 through 3.7.3.8, respectively:

1. Product Request
2. Product Display
3. Local Product Storage
4. Product Annotation and Distribution
5. PUP Control
6. Status Monitoring
7. Archiving

3.7.3.1 PUP Display and Data Entry

Each PUP shall include two color graphic displays, an alphanumeric display, data entry equipment, and hard copy capability. Worktables and/or equipment stands shall be provided to support this equipment. The PUP primary operator's chair shall also be provided. At selected locations it shall be possible to locate the display and data entry equipment at a maximum of 300 cable feet from the PUP processing equipment, while maintaining full functionality.

3.7.3.1.1 Color Graphic Displays

Each color graphic display provided as part of the PUP configuration shall be a raster scan, 60 Hz, non-interlaced unit with a diagonal dimension of at least 19 inches, and a resolution of at least 640 x 512 (horizontal x vertical) picture elements (pixels).

It shall be possible to simultaneously display eight different luminance values of any of the primary colors (i.e. red, green, blue). Each luminance value, as measured on the display screen, shall be at least 10% (of the highest luminance value of the primary color being displayed) different from any other luminance value.

It shall also be possible to select and simultaneously display at least 128 different colors. These colors shall be selected from the set that results from combining the primary color luminance values defined in the preceding paragraph.

Each color graphic display shall be capable of displaying either a single 512 x 512 pixel product, or up to four 256 x 256 pixel products. When multiple products are simultaneously displayed, it shall be possible to update, annotate, or replace a single product or change its background map without affecting the display of any other products which are simultaneously being displayed.

Each color graphic display shall be capable of supporting the product display and product annotation capabilities called out in Sections 3.7.3.3 and 3.7.3.5 as they relate to the presentation and local annotation of base and derived products.

3.7.3.1.2 Alphanumeric Display

The alphanumeric display provided as part of the PUP configuration shall be physically distinct from the PUP color graphic displays and shall support the presentation of at least 24 lines of data, each of which contains at least 80 characters. The alphanumeric display shall include separate areas for the display of products and requested information and for the input and previewing of operator-entered data.

3.7.3.1.3 Data Entry Devices

Each PUP shall provide the capability to support data entry through an alphanumeric input device, a programmable function selection capability, and a cursor control device. The following types of entries shall be provided:

1. Annotation, including the ability to add, move, and delete data, special symbols, and line segments.

2. Maps and map modifications.

3. Commands, as required to support PUP functional capabilities.

No combination of errors in data entry shall require a PUP restart. Invalid entries shall result in an appropriate message being provided at the operational position.

3.7.3.1.3.1 Alphanumeric Input Device

The capability shall be provided to support a keyboard generating standard ASCII code. Inputs shall be displayed on either of the color graphic displays or the alphanumeric display, based on operator selection. The input capability shall include all of the ASCII 128 character and control command set (ANSI x3.4) and 64 special characters and symbols. The special characters and symbols shall be definable using support software specified in Section 3.7.6.4.2 and its subsections. Special symbols shall be displayable on either of the color graphic displays.

3.7.3.1.3.2 Programmable Function Selection

The capability shall be provided to support programmable function selection through a single manual action for at least 30 functions. When a particular single action function selection is activated, a predetermined sequence of events shall take place without further operator intervention. This capability shall be provided for functions that are time consuming or frequently performed.

The capability to assign a particular sequence of events to a specific function selection activator or to change the programming of an existing function selection activator shall be provided.

3.7.3.1.3.3 Cursor Control

The capability to control a color graphic display cursor symbol without using a keyboard shall be provided. This capability shall enable the operator to position a cursor at any pixel on a color graphic display. The operator shall have the capability of defining one of the two color graphic display cursors as being a master cursor with the other color

graphic display cursor being a slave cursor. When a display is used in the 1/4 screen mode, there is no requirement for the capability to designate one of its four cursors as the master cursor. When multiple products are being displayed, a multiple slave cursor capability shall be provided which displays a cursor symbol on each product display on the same geographic basis as shown for the master cursor. A cursor home capability and a cursor coordinate readout capability shall also be provided when a cursor is designated as a master cursor. Linking of the slave cursor shall apply both to multiple products (e.g., 256 x 256) being displayed on a single display unit and to individual products (e.g., 512 x 512) being displayed on each of two display units.

3.7.3.1.4 Hard Copy

A capability shall be provided for generating either a color or a monochrome hard copy output of a displayed product. The hard copy output shall have the same scale of resolution as the graphic version of the product.

The color hard copy capability shall provide for generation of at least 16 colors. The monochrome hard copy capability shall provide for generation of at least six intensities.

Hard copy output shall be controlled by the PUP operator. The capability to initiate and terminate the hard copy output process for products shall be provided. The generation of a hard copy shall not require "freezing" the graphic display device for more than 3 seconds.

3.7.3.2 Product Request

Each PUP shall be capable of requesting any set of products for routine receipt from an associated RPG. The PUP shall be capable of specifying the frequency at which a product is to be sent (up to the frequency at which the product is generated) and its priority. The PUP shall also be capable of requesting a change at any time to the set of products routinely sent from the associated RPG, or to their frequency or priority. The requests for these products and selection of their frequency and priority shall be based on adaptation data and on-line PUP operator inputs using the display and data entry equipment called out in Section 3.7.3.1.

Each PUP shall have the capability to readily display to the PUP operator the menu of products available from the associated RPG and also the set of products currently being routinely provided by the associated RPG, together with their frequency and priority.

Each PUP shall also be capable of requesting selected products on a one-time basis from any associated or non-associated RPG. For any one-time product selection the PUP may include a RPG to PUP transmission priority value. The transmission priority value shall provide control of the product transmission sequence to the PUP so that a one-time product selection may be interleaved with or transmitted prior to products defined for routine transmission to the PUP. If no transmission priority value is included with the one-time product selection, then the product shall be transmitted prior to the products defined for routine transmission to the PUP. For a non-associated PUP, the request shall specify whether or not background map data is to be included as part of the product to be sent. For either an associated or non-associated PUP, the request shall be based on a need for RPG data resulting from an on-line PUP operator product display selection, as

discussed in Section 3.7.3.3.1.

Each associated operational position shall be capable of specifying if the designated product (See Section 3.7.2.5.9) will be sent to that position when its alert criteria have been met.

3.7.3.3 Product Display

Each PUP shall be capable of displaying NEXRAD products using (a) the data routinely sent from the associated RPG in conjunction with locally stored data, such as background maps and other overlays, and (b) the data received from any RPG as the result of a one-time request. Any annotations made to a product at an RPG shall be normally preserved when the product is displayed at an associated PUP; however, it shall be possible to display the product without the annotations in order to de-clutter the displayed product. Background maps used at the associated RPG will not be included when the product is sent to the PUP; instead, the background maps shall be stored locally at the PUP and merged with the appropriate base or derived product when it is displayed.

Products shall be displayed at the PUP in response to an operator request for a specific product or based on Government approved criteria for the default presentation of products in normal or hazardous weather situations. The product presentation shall use the information in the local PUP data base, if available. If it is not available, the specific product shall be automatically requested from the associated RPG. The time required for call-up and display of products shall meet the response time requirements called out in Section 3.2.1.3 and its subsections.

The product display function shall include the following capabilities:

1. Product Display Selection
2. Overlay Capability
3. Recentering
4. Magnification and Resolution Change
5. Time Lapse Display
6. Display Queued Product
7. Alert Notification

3.7.3.3.1 Product Display Selection

Each PUP shall contain a product display selection capability using the display and data entry equipment called out in Section 3.7.3.1. The product display selection shall identify the product type to be displayed, the display or portion of a display on which it is to be displayed, and the RPG which generated the product (if other than the associated RPG).

This capability shall cover the selection of any base, derived, or alphanumeric product generated by the associated RPG. It shall also cover any product available for distribution from a non-associated RPG and, in that case, indicate whether background map data is to be

included. In the case of products that depict multiple data levels of reflectivity or velocity data, the capability shall be provided to filter selected data levels or combine multiple data levels when displaying the product based on PUP operator input. If filtering is selected, those reflectivity or velocity levels below the data level identified by the operator shall not be displayed. If combining is selected by the PUP operator, two or more data levels shall be depicted using the same color (if a pixel map) or by the same contour line (if a contour map).

3.7.3.3.2 Overlay Capability

Each PUP shall be able to display selected products and background maps as overlays. Any combination of displayed overlays and radar data shall be geographically registered within an accuracy of one kilometer or the resolution of the coarsest product displayed.

The following overlay combinations shall be provided, and each overlay within the combination shall be capable of being independently selected and deselected. The background (i.e., non-data area) color is included in the number of colors required per overlay.

Combination	Characteristics
1	1 overlay of 16 colors
2	1 overlay of 8 colors and 1 overlay of 2 colors
3	2 overlays of 4 colors each
4	1 overlay of 4 colors and 2 overlays of 2 colors each
5	4 overlays of 2 colors each

3.7.3.3.2.1 Product Overlay Selection

Each PUP shall contain a product overlay selection capability using the display and data entry equipment called out in Section 3.7.3.1. Products which can be used as overlays are identified in Appendix E. Any product overlay available in local PUP storage shall be capable of being selected or deselected. When a product overlay is selected, it shall take precedence and be observable on a pixel-by-pixel basis over product data and background map data that would otherwise have been displayed. When a product overlay is deselected, any product data or background map data not displayed because the product overlay data took precedence shall be displayed.

3.7.3.3.2.2 Background Map Selection

Each PUP shall contain a background map selection capability using the display and data entry equipment called out in Section 3.7.3.1. The background map selection shall identify lines and alphanumerics and other symbols to be displayed together with the product presented on a color graphic display. Any background map adapted for use with an individual PUP shall be capable of being selected or deselected by the operator. Product data shall take precedence and be observable on a pixel-by-pixel basis over background map data that would otherwise have been displayed. When background map data is deselected, any other

background map data not displayed because the deselected map data took precedence shall be displayed.

For each product type, a background map will be selected for concurrent display. This background map shall be displayed whenever the product type is displayed, unless the operator requests otherwise. The specific background map to be used with a given product shall be adaptable. Background map data for the radar area will be stored into high and low resolution maps:

1. Low Resolution - covering the full Cartesian space.

2. High Resolution - consisting of 16 maps, each containing data for one-sixteenth of the full Cartesian space. High resolution will contain all low-resolution detail and additional detail when available.

Background maps shall include:

1. Political Boundaries

   outlining states and counties, and annotating counties. States and counties will include the same detail in both LOW and HIGH resolution. Counties will be annotated (named) only in HIGH resolution.

2. Geographic Boundaries

   a. State Boundaries - including international treaty lines, national boundary lines (both land and water) and state lines (both land and water). The detail will be the same for both LOW and HIGH resolution.

   b. County lines - including county lines (both land and water), corporate limits and small independent cities. The detail will be the same for both LOW and HIGH resolution.

3. Range Rings

   Low resolution - polar rings and radii spacing shall be determined as a function of the product with which they may be associated. A status line shall indicate the spacing of the polar rings and radii.

   High resolution - Radii spaced every 10 degrees of azimuth, and polar circles drawn every 10 nm from the RDA position. There shall be tick marks every 1 nm along each radius, with emphasis on every fifth tick mark.

4. Airports

   All commercial and military airports as defined by the USGS Digital Line Graph data. The detail will be the same for both LOW and HIGH resolution.

5. Navigation Aids

   The detail will be the same for both LOW and HIGH

resolution.

a. VHF Omni-Directional Range (VOR)

b. VHF Omni-Directional Range/Tactical Air Navigation (VORTAC)

c. VHF Omni-Directional Range/Directional Measuring Equipment (VORDME)

d. Non-Directional Beacon (NDB)

e. Instrument Landing System (ILS)

6. Radar Data Acquisition Sites

Acronym and icon for all other active RDA sites within 250 nm range. The detail will be the same for both LOW and HIGH resolution.

7. City and Town Names

Low resolution - Five large cities spaced at least 50 nm from one another, and within 125 nm range from the site.

High resolution - three cities/towns for each county (borough, parish, census area, etc.) in each of the fifty states, and within 250 nm range of the site.

8. Special Use Airspace

Vectorial detail will be the same for both LOW and HIGH resolution. Textual information will appear only on HIGH resolution.

a. Prohibited Areas

b. Restricted Areas

c. Military Operation Areas

- A PUP icon indicating the location of each PUP located on a Military installation.

d. Warning Areas (International Waters)

9. Rivers

Rivers and streams (perennial and intermittent), centerline of water bodies, canals (navigable and other), U.S. coastlines including the Great Lakes, and permanent water bodies (lakes, reservoirs and islands).

The level of detail included in LOW and HIGH resolution is a function of data sources and software/hardware design and will be determined by the government and the contractor.

10. River Basin Boundaries (Watersheds)

    The level of detail included in LOW and HIGH resolution is a function of data sources and software/hardware design and will be determined by the Government and the Contractor.

11. Airways Including Military Refueling Zones and Training Routes

    The detail will be the same for both LOW and HIGH resolution.

12. Grid Overlays

    Vectorial detail will be the same for both LOW and HIGH resolution. Textual information will appear only on HIGH resolution.

13. Highways

    Interstate highways, major limited access highways (U.S., state and other) minor U.S. limited access highways, U.S. non-limited access highways, and state secondary highways.

    The level of detail included in LOW and HIGH resolution is a function of data sources and software/hardware design and will be determined by the government and the contractor.

14. County Names

    A six character abbreviation for each county (borough, parish, census area, etc.) within 250 nm of the site shall be included in the high-resolution map. This applies only to sites in the 50 states.

    County names will be displayed only in HIGH resolution.

15. Latitude/Longitude Tick Marks (Overseas)

    For sites outside the 50 states, the background map shall contain a small tick mark (plus sign) every 5 degrees of latitude and longitude on low-resolution and every degree on high-resolution.

3.7.3.3.3 Recentering

Each PUP shall contain a recentering capability using the display and data entry equipment called out in Section 3.7.3.1. This shall include the capability to off-center a product display to any specified geographic point within the geographic area covered by the product. It shall also include the capability to recenter the display to a preselected point (e.g., the location of the applicable radar or of the PUP itself). Where multiple products with the same geographic coverage are being simultaneously displayed, the capability shall be provided to recenter a single product display or all such product displays simultaneously. When recentering takes place, the entire product display area (256 x 256 or 512 x 512 pixels) shall be filled with product data to the extent that the data for the corresponding

geographical area is in the local PUP data base.

When a product display is recentered, all overlays and annotation symbols being displayed shall be recentered accordingly.

3.7.3.3.4 Magnification-and-Resolution Change

Each PUP shall contain a magnification and resolution change capability for base and derived products using the display and data entry equipment called out in Section 3.7.3.1.

Magnification change is defined for all base and derived products and provides the capability to expand or reduce the geographic coverage of a currently displayed product without, in the case of pixel data (e.g., base products), changing the geographic resolution of the displayed data. The magnification change capability shall provide for a x2, x4, and a x8 magnification; it shall also be reversible.

Base products and derived product resolution are defined in Table E-1, Appendix E. Resolution change shall include the capability to change both the geographic coverage of a displayed product and the geographic resolution of the data for those products having multiple resolutions. Resolution change may be accomplished through the selection of the different resolution of the displayed product from the associated RPG.

When a magnification or resolution change is made to a product display, all overlays shall be repositioned accordingly, but the display resolution of lines shall not change (i.e., map lines shall not become thicker) and the size of alphanumerics and other symbols shall not change.

3.7.3.3.5 Time Lapse Display

Each PUP shall contain a time lapse display capability for each type of base and derived product maintained in the local PUP data base (see Section 3.7.3.4). It shall be possible to time lapse any sequence of a base or derived product currently in the local data base while meeting the response times shown in Table 3-4. Each PUP operational position shall have the capability to preselect up to three products for future time lapse display.

The time lapse display capability shall support the sequential presentation of up to 72 images of the selected product or the number available in the local data base, whichever is less. The real-time interval between display images shall be an operator selectable integer multiple of the product update period. The display-time interval between display images shall be operator selectable within the response time limits specified in Table 3-4.

The operator shall have the following minimum control of the images:

1. Single sequence of images with the last image remaining on the display.

2. Repeat of 1. above with a single user action.

3. Stop of sequence, with advance or reverse of sequence, one image at a time.

3.7.3.3.6 Display Queued Product

Each PUP shall have the capability to display a queued product in response to a PUP operator action. Whenever a PUP receives a product which was requested by the PUP operator or which is normally displayed upon receipt, and all potential display units are currently used to display other products, then an indication shall be provided to the PUP operator that a product is available for display. The PUP operator shall have the capability to request the display of a queued product, in which case the first product entered into the queue shall replace the currently displayed product on the display unit indicated by the operator. Any other products in the queue shall remain available for display in response to a later operator action. The PUP operator shall also have the capability to merely acknowledge the presence of one or all queued products, in which case the queued products shall be removed from the queue and the queued product indication to the operator shall be updated accordingly.

3.7.3.3.7 Alert Notification

The associated PUP or RPGOP operator will be notified by both audible and visual means that certain meteorological phenomena are occurring within or are projected to enter the alert areas.

3.7.3.3.7.1 Alert Areas

There shall be up to two operator defined alert areas for each operational position. The alert areas shall be definable from the alert grid (Section 3.7.2.9). An alert area may be made up of any group of alert area grid squares. An alert area may be noncontiguous and the two defined alert areas may overlap.

The operational position shall be capable of displaying an outline of that position's alert areas as an overlay. Each alert area shall be uniquely identified on the display.

3.7.3.3.7.2 Alert Threshold Criteria

The operational position shall be capable of selecting threshold criteria for up to 10 of the alert categories defined in Appendix J for each of the two alert areas. Each threshold criterion selected shall be from the set of values resident at the RPG.

3.7.3.3.7.3 Alert Procedure

When an alert condition has been met within an alert area, the alphanumeric alert message and an audible and a visual notification shall be provided to the operational position. No alert shall be reissued for the same alert category within a given alert area without the intervention of a volume scan devoid of such alerts.

The operator shall be able to turn off the alert notification with an acknowledgement procedure. The volume of the audible alert mechanism shall be manually adjustable from inaudible to at least 78.0 dB(A) at 1 meter.

3.7.3.4 Local Product Storage

Each PUP shall include the capability to maintain a local data base containing the products and other data that are used regularly within

the PUP. All products received from the associated RPG (including RPG generated annotations) shall be retained locally for six hours. The local data base shall have the capability to include:

1. Background Map Data
2. Base Products
3. Derived Products
4. Alphanumeric Products (including alert messages)
5. Data formatted for Time Lapse Display
6. System Status Information

3.7.3.5 Product Annotation and Distribution

Where required by a principal user, a PUP shall include the capability for local annotation of selected NEXRAD products, their local storage, and their distribution or control of their distribution to a principal user external system. The annotation capability shall include the ability to add, move and delete alphanumeric data, special symbol data, and line segments.

3.7.3.5.1 NWS PUP Annotation and Distribution

Each NWS-operated PUP shall include a capability to control the distribution of locally annotated and other products to NWS external users and to other users.

3.7.3.5.2 DOD PUP Annotation and Distribution

Each DOD-operated PUP shall include a capability to control the distribution of locally annotated and other products to DOD external users from the PUP. In the case of AWS, these products shall be locally distributed by AWDS, provided to a remote monitor, or both. In the case of NOC, these products shall be locally distributed via NEDS to Navy users.

3.7.3.5.3 FAA PUP Annotation and Distribution

Each FAA operated PUP shall include a capability to control the distribution of locally annotated and other products to FAA external and other users.

3.7.3.6 PUP Control

PUP control shall provide the capability necessary for the PUP to accomplish its operational functions. Control functions that shall be provided in the PUP include:

1. PUP Cold Startup
2. PUP Restart
3. PUP Shutdown
4. Start/Stop Communications

5. Change Adaptation Data

6. PUP Communication Line Configuration

7. Other User Distribution

3.7.3.6.1 PUP Cold Startup

A PUP cold startup capability shall be provided to initiate the operation of the PUP without any concern for the current state of the remainder of the NEXRAD Unit. PUP cold startup shall be used to initiate operation when the PUP is first put into operation. It shall also be used after failures which make it impossible to recover data present at the time of the failure. PUP cold startup shall also be used when the PUP restart function (see Section 3.7.3.6.2) fails to operate properly.

PUP cold startup shall be accomplished within the time specified in Table 3-4 and with a minimum of human intervention.

The PUP cold startup capabilities shall include:

1. Initialization of PUP equipment, firmware, and software,

2. Initialization of all clocks and internal timers,

3. Establishment of the interface with the associated RPG (if operating),

4. Establishment of all dedicated communications links,

5. Verification of the assumed configuration,

6. Notification to all dedicated users (if connected) that the PUP is operational, and

7. Establishment of products desired and their frequency and priority.

3.7.3.6.2 PUP Restart

A PUP restart capability shall be provided to restore the previous state of the PUP after a failure from which recovery is possible without maintenance action. PUP restart shall be capable of being initiated manually or automatically. PUP restart shall be performed when the PUP experiences transient failures, momentary power failures, and other such short-term failures.

A PUP restart shall be accomplished within the time specified in Table 3-4 and without human intervention (except for the initiation action in the case of a manually initiated PUP restart).

The restart capabilities shall include:

1. Automatic reboot of the system software (if necessary),

2. Restoration to the operating state (e.g., display mode, adaptation data, functions selected, etc.) that was in existence when service was interrupted,

3. Re-initialization of all clocks and timers,

4. Reestablishment of the interface with the associated RPG (if operating),

5. Reestablishment of all dedicated communications links,

6. Verification of the assumed configuration, and

7. Notification to all dedicated users (if connected) that the system is again available.

3.7.3.6.3 PUP Shutdown

Each PUP shall have the capability to shut down in a controlled manner. The controlled shutdown shall return the PUP to a state from which a PUP startup is required to resume operation. The controlled shutdown shall terminate the receipt of products from any RPGs. It shall include the notification to the principal user external system and other users of the expected shutdown in a manner that permits, to the extent feasible, these users to request and receive needed information from the PUP prior to termination of data distribution by the PUP.

3.7.3.6.4 Start/Stop Communications

Each PUP shall have the capability to start or stop communication with any of its communications link interfaces. The stopping of communication with the associated RPG shall not affect communication with users. The start or stop of communication with one user shall not affect communication with any other user or with an RPG.

3.7.3.6.5 Change Adaptation Data

Each PUP shall have the capability to locally change adaptation parameter values. Examples of parameters which are adaptable are described in Appendix H.

Each PUP shall also have the capability to locally adapt existing background maps by adding or deleting symbols and line segments. When a background map has been locally adapted, both the currently adapted version and the version which existed prior to any local adaptation shall be retained in the local PUP data base.

3.7.3.6.6 PUP Communication Line Configuration

It shall be possible to configure or reconfigure any narrowband communication port to connect to and communicate with any of the NEXRAD communication classes available. This configuration shall be accomplished solely via adaptation data and with the installation of the proper operating system and communications equipment. The maximum number of port(s) (based on 9.6 Kbps/port) is limited by the PUP/RPGOP aggregate data rate of 76.8 Kbps, expandable to at least 96.0 Kbps. The

maximum number of ports and the number of ports that may be configured for each class shall be provided as shown below:

Ports	Unexpanded Limits	Expanded Limits
Maximum	8	10
Class 1	2*	2*
Class 2	8	8
Class 3	2	2
Class 4	4	4
Class 5	N/A	N/A

*PUPs only. RPGOP is dedicated, hard-wired to host RPG processor. Refer to NTR Para 3.7.2.4.

3.7.3.6.7 Other User Distribution

It shall be possible to select at the PUP the method of product distribution for each Class IV port interfaced to the PUP. The possible methods shall be as required by NTR 3.7.2.3.5.

3.7.3.7 Status Monitoring

Each PUP shall provide the capability for the PUP operator to monitor the status of all major components of the PUP, as well as the status of the associated RPG and RDA, the RPG communications link, and any external PUP interfaces. This status monitoring capability shall include operational modes, conditions, and parameters, as well as error conditions. When the status of any of these items changes, a descriptive English language message shall be displayed and also written to a status file. In addition, the capability shall be provided to detect and record all hardware and software errors. When an error occurs, a descriptive English language message shall be displayed and written to a permanent error log. The capability shall also be provided to maintain a permanent record of the time and content of alert messages received by the PUP.

These status monitoring and error detection functions shall run concurrently with normal system operation.

The capability shall be provided to allow the PUP operator to determine (a) the current status of the PUP equipment, the PUP communications interfaces, and the associated RPG and RDA, and (b) the status of the NEXRAD Unit over the past six-hour period. The capability shall also be provided to allow the PUP operator to request the display of a test pattern on any graphic display.

Overload Warning Threshold adaptation parameters shall define the utilization level that, when reached or exceeded, will result in an overload warning being issued. Overload types shall include as a minimum: processor, memory, communication interfaces, input data buffers, mass storage, and archival storage utilizations.

A Product Overload Shedding/Recovery Priority adaptation parameter shall define the order for deleting products when an overload situation occurs

on an interface between functional areas, or an interface between a functional area and an external user's system. The recovery from an overload condition shall be performed automatically as soon as conditions allow. Products shall be recovered in the reverse of the shedding order.

3.7.3.8 Archiving

Each PUP shall have the capability to maintain an archive record of received background maps, selected products, and product overlays on a permanent and easily transportable medium. This is defined as Archive IV. Each PUP shall have the capability to specify the frequency at which this data is archived. The PUP shall have the capability to ingest, from the archive medium, products, background maps, and product overlays previously archived by any PUP or RPG for processing or display. The capability shall be provided to display archived RPG or PUP status messages. The equipment used for the PUP archiving shall be exactly the same as the equipment used for RPG archiving (See Section 3.7.2.7).

The capability shall also be provided to archive the entire local product database based on a PUP operator action. The current recording state (i.e., whether archiving is active or inactive and, if active, what products are being recorded) shall be readily displayable to the PUP operator. The capability shall be provided to select continuous status message archiving.

3.7.4 Communications Functional Area

The communications functional area includes:

1. Wideband Communications between the RDA and the RPG

2. Narrowband Communications at the RPGs and PUPs.

A graphic representation of the possible communications links is shown in Figures 3-2 and 3-3. A summary of the types of information flowing over these links is provided in Table 3-2. The number and types of communication circuits required at a specific site depends on the mix of users served by that site. Table 3-5 provides the range of possible values for each type of circuit. Table 3-9 lists the basic characteristics of each type of link.

There are a number of possible site layout configurations. Depending on the site configuration, some communications links will be contractor supplied and some will be provided by the Government. Figure 3-7 illustrates the basic division of responsibilities between contractor and government for the two principal types of site configurations in which the RPG is collocated at the radar site or alternatively collocated at the user site.

The contractor-supplied links shall include all hardware, firmware, and software required to fully implement an operational link.

For all other NEXRAD communications links, the contractor shall supply the necessary hardware (up to the point where it connects to the user facility central telephone rack), firmware, and software required to interface with the Government-supplied communications link. Requirements for both dedicated and non-dedicated lines are provided in Appendix A.

TABLE 3-9 NEXRAD COMMUNICATIONS LINK CHARACTERISTICS

LINK*	ATTRIBUTE(s)
RPG CLASS I	a,b,c,d,j,n
RPG CLASS II	a,b,c,e,g,j,n,h
RPG CLASS III	a,b,c,d,m,n
RPG CLASS IV	a,b,c,d,e,g,h,m,n
RPG CLASS V	a,b,c,e,f,g,h,m,n
PUP CLASS I	a,b,c,d,j,n
PUP/RPGOP CLASS II	a,b,c,e,f,h,j,n
PUP/RPGOP CLASS III	a,b,c,d,m,n
PUP/RPGOP CLASS IV	a,b,c,d,e,g,h,m,n
RDA TO RPG (WIDEBAND)	q or k
RPG TO/FROM REMOTE UCP	a,b,c,d,j
RDA TO USER SITE (BASE DATA)	m,r
RPG TO USER SITE (BASE DATA)	m,r
RPG TO RPGOP	a,c,o
INTERCOM	d or e or p

Attribute List:
a: Full Duplex
b: 9600/4800 bps switch selectable at modem
c: Synchronous
d: Leased (dedicated) 4-wire, 3002 voice grade minimum for domestic usage.
e: Switched 2-wire
f: Auto-Call
g: Auto Answer
h: Auto Disconnect
j: Government supplied
k: Contractor defined and supplied
m: Outside of NEXRAD
n: Meets NEXRAD ICD
o: Dedicated, hard-wired, 56 kbps
p: VHF/UHF radio link
q: AT&T compat. commercial, framed, T-1 service, 1.544 Mbps.
r: Contractor Specified

*Link classes as defined in NTR Appendix A (Class I through V)

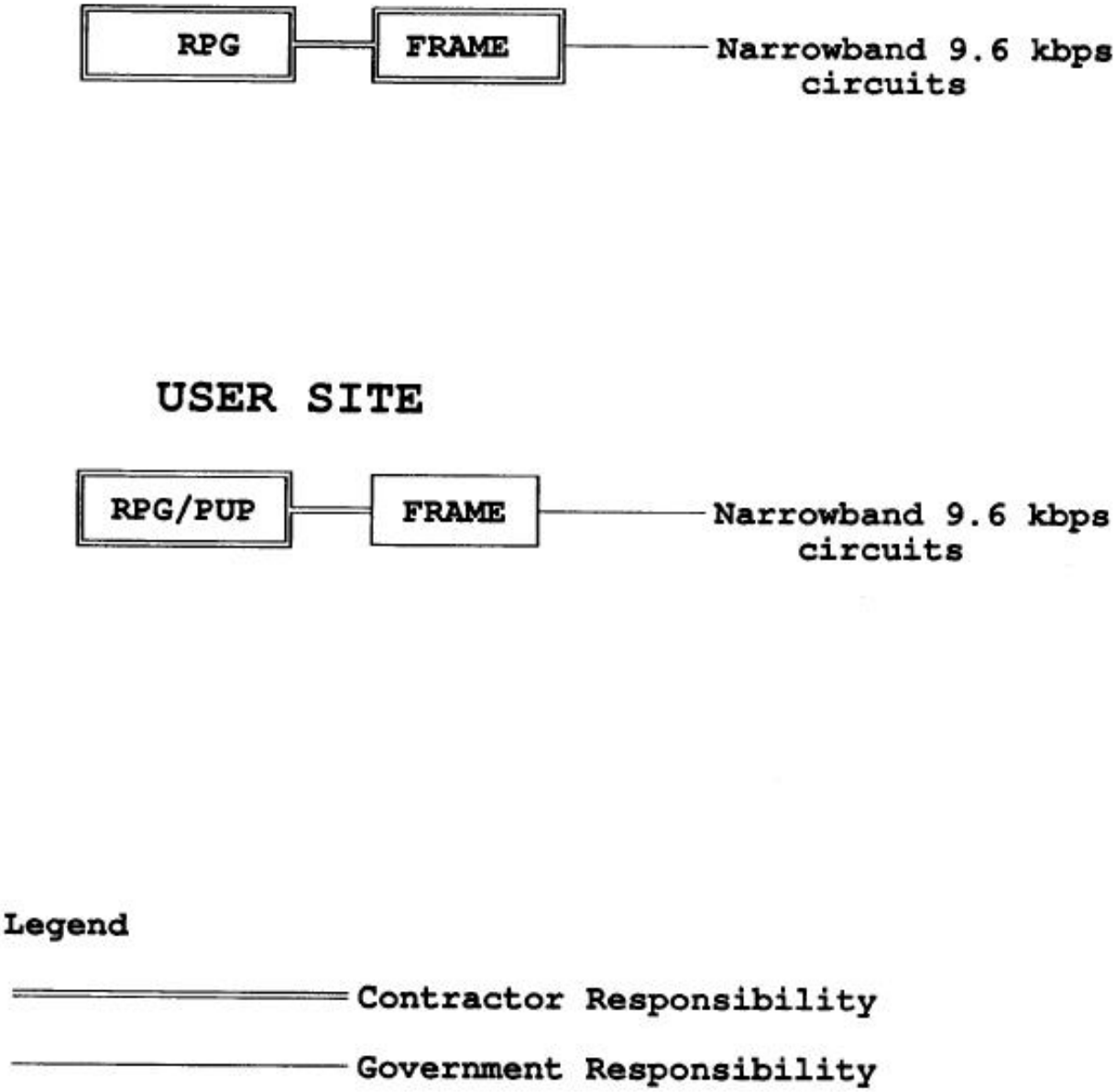

FIGURE 3-7 NARROWBAND COMMUNICATIONS CONFIGURATION RESPONSIBILITIES

When the RPG/PUP is located at the Principal User Site, the Government will provide an appropriate (minimum 100 pair capacity) narrowband communications demarcation frame (standard telephone wire termination rack) and the cable connecting the frame to a telephone company (TELCO) exchange. The contractor shall provide and install an appropriate multi-conductor cable with sufficient capacity to connect the maximum number of narrowband ports (as defined in paragraphs 3.7.2.5.13 and 3.7.3.6.6) from the RPG/PUP modem locations to the narrowband communications demarcation frame. Both ends of this cable shall be appropriately marked to allow future connections as additional modems are installed.

When the RPG is located at the radar site, the contractor shall provide a narrowband communications demarcation frame with the capacity to terminate 100 pairs of telephone cable in the contractor-provided facility. The contractor shall provide and install an appropriate multi-conductor cable with sufficient capacity to connect the maximum number of narrowband ports as defined in paragraph 3.7.2.5.13 from the RPG modem locations to the narrowband communications demarcation frame. Both ends of this cable shall be appropriately marked to allow future connection as more modems are installed. The contractor shall also include provisions for intrusive narrowband line testing. Intrusion shall allow on-line monitoring as well as the ability to break the line(s) for look-back and look-forward testing. The point of intrusive testing shall be at communications/equipment racks or cabinets and shall provide for easy connection of test equipment via a patch panel or other similar equipment. The Government will be responsible for cross-connects at the narrowband communications frame and activation of service. Commercial telephone service provided by the Government will support 3002 type voice grade private lines.

In the following sections, the required general modem characteristics for all narrowband communications links are first described, followed by specific communications link characteristics.

3.7.4.1 General Modem Characteristics

All modems shall be mounted in a contractor supplied cabinet; the mounting technique shall provide for rapid replacement of each modem.

In the United States and controlled territories, the contractor shall use the CCITT V.29 four wire modem or a CCITT V.32 four wire modem for all dedicated links. In addition, the CCITT V.32 two-wire modem shall be used for all dial-up links. Each RPG and all of its associated PUPs shall have dedicated modems that are compatible to eliminate any interoperability problems between RPGs and PUPs. All modems shall have a test capability to include local analog and remote digital loop-backs. Indicators, as a minimum, shall be provided for power-on, test mode, carrier-on, clear to send, and request to send.

All dial-up lines shall have an automatic calling unit (ACU) capability. All dial-up modems shall respond to a call-disconnect initiated by either an operator-entered command or a predefined set of conditions at either end of the link.

Modems and ACUs being installed at overseas locations shall meet the requirements for data transmission specified in Appendix A. V.29 and V.32 modems shall be used wherever permitted by the affected overseas nation. Homologation shall, however, be a contractor responsibility in Great Britain, the Federal Republic of Germany, Spain, the Republic of

Korea, the Republic of the Philippines, Japan, Italy, Portugal, the Republic of Panama, and the Netherlands.

3.7.4.2 Communications Links Characteristics

Table 3-9 delineates the characteristics of each type of NEXRAD data communications link. Allowable options within the existing classes, as defined in Appendix A, shall be controlled through adaptation data by the RPG and PUP control consoles. These options shall be selectable for each individual port with that assigned class.

If wideband communication is required the design shall allow interface cables to be readily replaced by microwave radios and antennas or other wideband communications equipment, as provided by the contractor's design. The inherent availability of the microwave and fiber optic wideband communications system, including both communications hardware and the communications path, shall be greater than or equal to 0.9990.

3.7.4.3 Communications Security

For all dial-in communication ports, provisions shall be made to identify users and deter access to the RPG and PUP beyond allowed requests. Any invalid entry shall be responded to with an error message. Three such invalid entries by the same user shall result in immediate disconnection from that port. Site adaptable passwords for each port and each user shall be required to access any data from that port.

3.7.4.3.1 Communications Disconnect

For each dial-in port, the calling site shall be automatically disconnected after a time limit has been reached. When the time limit has been reached, the product currently being transmitted shall be completed before disconnecting the caller. This time limit shall be adjustable and shall be independently controllable for each dial-in port from the appropriate RPG (UCP) or PUP. A capability shall be provided to allow designated users to override the disconnect feature of any port.

3.7.4.4 Microwave-Line-of-Sight System

A microwave line-of-sight (MLOS) system shall be one option to provide wideband communications. The contractor shall provide the option for the microwave antennas at the radar site to be mounted either on the NEXRAD radar tower or on a separate tower which is not less than 200 ft from the NEXRAD radar tower. The MLOS system shall comply with the requirements defined in 3.2.6. The MLOS system shall employ a Fault Alarm System (FAS) which shall monitor all MLOS major and minor alarms. When active repeaters are used, the state and condition of the power source and MLOS repeater alarms shall also be monitored. The FAS will have both audible and visual alarms. The FAS alarms shall be reported at the UCP location. At selected sites the contractor shall provide obstruction lighting on the MLOS towers in accordance with FAA specifications AC 70/7460-1F.

3.7.4.4.1 Microwave Repeaters

Microwave radio repeater sites shall operate from commercial primary power. A 24 hour capacity back-up battery system shall be provided. The contractor shall also provide back-up generator power. This shall

have a seven day running capacity and shall be automatically initiated after a loss of commercial power of 1 hour or greater. After commercial power has been restored for at least 1 hour, the site shall be automatically switched back to commercial power. Each change in power source shall result in appropriate reporting at the FAS.

3.7.4.4.2 MLOS Facilities

MLOS antennas, reflectors, and towers shall comply with EIA Standards 195-C and 222-C. Wind loading design for all towers shall be EIA Zone B at a minimum. In cases where a separate MLOS tower is employed at the radar, repeater, or principal user site, the option for a radio shelter shall be provided by the contractor to house the MLOS equipment. The radio shelter shall support operation of the MLOS equipment over the range of the outdoor environmental conditions defined under paragraph 3.2.6.1.

3.7.5 Facilities Functional Area

The Facilities functional area includes construction or modification of buildings and towers, provision and installation of Real Property Installed Equipment (RPIE) such as power generation and air conditioning equipment, and construction of access roads which are needed in support of the RDA, RPG, PUP, Communications, and Support functional areas. The contractor shall be responsible for mechanical and electrical alignment of the antennas for wideband communications links, including at repeater installations.

1. Contractor Responsibilities

At each radar site and MLOS site the contractor shall provide, install and test all required NEXRAD equipment, structures, and NEXRAD support equipment including but not limited to: access roads (in accordance with Appendix M), utilities and utility extensions, footings and foundations, ancillary equipment shelter(s) and associated footings and foundations, towers, environmental control, backup power, fuel storage and associated piping, grounding, security fencing, and wideband communications link to user site including any wideband repeater installations. At the Government's option, towers constructed at selected sites shall be of structural steel. For MLOS, repeater, and passive reflector towers, the contractor shall provide an option for either a self-supporting tower or a guyed tower. Provisions for a commercial T-1 (1.54 Mb/s) service to replace Microwave may be required at certain sites. Provisions to house the RPG equipment when collocated at the radar site shall also be provided by the contractor, including the fully expanded RPG, the redundant configuration of 3.2.1.5.1, and the combination of both.

The contractor shall provide an automatic fire suppression capability for the NEXRAD indoor environment equipment located at the radar site (excluding radome interior).

At each principal user site the contractor shall provide, install, and test all required NEXRAD equipment and NEXRAD support equipment.

2. Government Responsibilities

For each radar site and MLOS site the Government will provide a survey of the selected site which includes a conceptual site plan and basic information concerning utilities, rough topography, soil type, climate, expected clutter, recommended frequency and tower height, and recommended locations/routings of access roads and wideband communication installations (as applicable). The acquisition of land, as required, will be a Government responsibility.

For each principal user site the Government will provide a survey of the selected site which includes a location plan, a floor plan, and information concerning utilities and locations of wideband communication installations (as applicable). The Government is responsible for equipment layout and design of principal user site building modifications in accordance with Section 5 "Responsibilities" of "PUP Site Survey Instructions and Information Package".

Equipment supplied by the contractor shall satisfy the requirements with respect to space, electrical, environment, and architecture as specified in Sections 3.7.5.1 through Section 3.7.5.4, respectively.

3.7.5.1 Space

Equipment to be located in an operator work area at a principal user site comprising all equipment required to perform any operator function including all PUP functional area equipment, and the unit control position, shall not require a horizontal area greater than 12 square meters.

3.7.5.2 Electrical

The equipment installed in the NEXRAD facilities shall satisfy electrical requirements related to:

1. Power Characteristics
2. Lighting
3. Cables
4. Electromagnetic Interference Shielding
5. Internal and External Cableways
6. Grounding

3.7.5.2.1 Power Characteristics

The power characteristics for Government supplied facilities will satisfy the following:

Steady State Voltage	120/208 VAC ± 10% (3 Phase, 4 wire)
Steady State Frequency	60 Hz ± 5%

Each NEXRAD Unit shall be designed to be compliant with "NWS Transient Susceptibility Standard," May 1978, with respect to lightning, transient suppression, and motor starting disturbances caused by the air conditioning system when both the air conditioning system and other NEXRAD equipment are operating in parallel and receiving power from a standby engine/generator.

To accommodate overseas installations, the contractor shall provide the capability to convert alternate primary power sources to the standard NEXRAD primary power defined above. Optional provisions shall be made to accommodate the following primary voltage and frequency configurations:

	single phase volts AC	three phase volts AC	freq in Hertz	
1.	120	208	60	(typical U.S. NEXRAD)
2.	127	220	50	
3.	220	380	50	
4.	230	400	50	
5.	240	415	50	
6.	277	480	50	
7.	100/200	-	50	
8.	100/200	-	60	
9.	110/220	-	60	

A single frequency converter shall be provided to support a collocated RDA/RPG. A separate converter shall be provided to support the PUP. When connected to the 50 Hz power through the frequency converter, all other aspects of the NEXRAD system shall remain unchanged.

Each NEXRAD Unit shall withstand a power outage without any damage. It shall be capable of automatic restarting and rapid recovery after power is restored.

3.7.5.2.2 Lighting

Radome and MLOS obstruction lighting shall be provided as per specification AC 70/7460-1F. Otherwise, NEXRAD facilities shall not require any special lighting effects other than incandescent lighting with dimmer control.

3.7.5.2.3 Cables

Cables used in an outdoor environment shall be designed for direct earth burial and shall be armored to be gopher resistant. The cable shielding, grounding, and routing shall be in accordance with paragraph 5.1.1.2.5 of MIL-STD-188-124A, using the guidelines of MIL-HDBK-419. The limits on electromagnetic emissions and susceptibility shall be as stated in Section 3.2.6.11 of this document.

3.7.5.2.4 Electromagnetic Interference Shielding

The NEXRAD radar shall include sufficient electromagnetic interference shielding and filtering to meet the requirements stated in Section 3.2.6.11. The requirements and practices to be followed regarding shielding effectiveness, screening, seams/joints/apertures, gaskets, and conductive surface coating shall be as given in paragraph 5.3.2 of MIL-STD-188-124A, using the guidelines of MIL-HDBK-419.

The guidelines for attenuation requirements, selection of suppression components, and mechanical considerations as described by the Electronic Industries Association (Filtering Electronic Equipment, Bulletin No. 9) shall be used.

3.7.5.2.5 Internal and External Cableways

Cableways shall be in accordance with National Electrical Code (NEC) requirements and shall meet electromagnetic interference requirements specified in Section 3.2.6.11.

3.7.5.2.6 Grounding

The NEXRAD equipment shall operate with a facility grounding system whose resistance complies with the National Electrical Code. The grounding connections and grounding methods shall be as required in paragraph 5.1.1.3 of MIL-STD-188-124A, using the guidelines of MIL-HDBK-419. The resistance of the NEXRAD equipment to earth shall be 10 ohms or less.

3.7.5.3 Environmental

The equipment installed in NEXRAD facilities shall satisfy environmental requirements related to:

1. Personnel
2. Equipment
3. Electromagnetic Environment

3.7.5.3.1 Personnel

Operating and maintenance personnel shall be provided with a comfortable working environment that meets the safety requirements of Section 3.3.6.

3.7.5.3.2 Equipment

Equipment shall be compatible with the environment in which it will operate and shall not cause any deleterious effects on the natural environment.

To provide visual compatibility with the environment, provisions shall be made for optional alternate colors of: the radome, the tower, and any other major outdoor facility item such as a separate shelter, backup power generator, etc. The choice of alternate colors to be provided shall be in accordance with color numbers 30219, 34127, and 34258 of FED-STD-595A. For FAA safety reasons, provisions shall be made for optional alternate colors of the tower structure (radome not included) in accordance with paragraphs 8, 9, and 10.b of AC 70/7460-IF. Colors of the final materials shall be subject to Government approval.

3.7.5.3.3 Electromagnetic Environment

The 2.7-2.9 GHz band, nationally, is a Government-exclusive frequency band intended for the primary use of the Aeronautical Radionavigation Service (air traffic control radars) and the Meteorological Aids Service (weather radars). The NEXRAD System shall be capable of operating in the Communication Electronics equipment environments within CONUS as well as at DOD overseas bases. This will require preplanning and EMC analysis to minimize the impact of interfering signals. To ensure that the NEXRAD System will not be susceptible to electromagnetic interference within the allocated frequency band, the following steps shall be taken:

1. The NEXRAD antennas shall be capable of being located at the sites designated by the Government.

2. The NEXRAD design shall take into account the presence of a composite interference signal profile. A composite interference signal profile (composite of contributing PRFs, scan rates, pulse widths, frequencies, etc.) can be based on equipment in the high equipment density areas within CONUS. Appendix F lists the baseline electromagnetic environment from which an interference signal profile can be developed.

3. The NEXRAD design shall provide the flexibility to incorporate the recommendations of EMC analysis. The recommendations may include one or more of the following items:

   a) Inserting filters in the receiver equipment,

   b) Providing adjustable transmitter and receiver frequencies in the allocated band,

   c) Augmenting the signal processing software capability,

   d) Incorporating special rejection circuits for interference, and

   e) Providing adjustable antenna coverage volume.

3.7.5.4 Architecture

The equipment installed in NEXRAD facilities shall satisfy architectural requirements related to:

1. Clearances
2. Access
3. Human Factors
4. Telephone and Intercom

3.7.5.4.1 Clearances

Consoles and cabinets shall be of a modular design with no unit exceeding 0.8 m x 1.2 m in plan; the vertical dimension shall not exceed 2 m.

3.7.5.4.2 Access

Access to all enclosures for cabling and ventilation shall be designed to allow installation on both standard and raised floor facilities. A cable access capability shall be provided through the rear of the cabinet near the base, and also through the bottom surface of the cabinet. Ventilation openings shall be limited to the front, rear, and top surfaces of the cabinet.

3.7.5.4.3 Human Factors

Consoles and other equipment shall conform to the principles of Human Factors as stated in Section 3.3.7.

3.7.5.4.4 Telephone/Intercom

The equipment shall include provisions for telephone/intercom capability

for the operational and system consoles. At a minimum, the intercom capability shall provide for simultaneous voice communication among all of the following locations/positions: the radome interior, the RDA maintenance position, and the Unit Control Position. The intercom system shall operate independent of primary power.

All equipment, cabling, and connections to accomplish this function shall be provided by the contractor. When the operational site (UCP location) is not collocated with the radar site, options for UHF/VHF radios, dedicated leased line, or dial-up service shall be provided in lieu of cabling for the remote connection.

3.7.6 Support Function Area

The Support functional area includes maintenance and logistics, training, development and test, and support software.

3.7.6.1 Maintenance and Logistics Support

For maintenance and logistics support, depot operational equipment, initial spares, maintenance support equipment, and off-line diagnostics shall be provided, as defined below.

3.7.6.1.1 Depot Operational Equipment

A set of NEXRAD operational equipment shall be provided for the maintenance depot. This equipment shall comprise that required to provide a configuration equal to the largest NEXRAD Unit configuration provided at any operational site.

3.7.6.1.2 Initial-Spares

Initial spares shall be provided to support the maintainability (3.2.4), availability (3.2.5), and maintenance (3.5.1) requirements of this document. Initial spares provisioning shall satisfy both support and operational facility requirements and be consistent with the contractor's approach for minimizing life cycle costs.

3.7.6.1.3 Maintenance Support Equipment

Maintenance support equipment shall be identified via Support Equipment Recommendation Data (SERDs) for the training and operational test facilities, and the operational facilities.

3.7.6.1.4 Off-Line Diagnostics

An off-line diagnostic capability shall be provided at each maintenance and logistics support facility and within each NEXRAD Unit. This capability shall permit isolation of faults to the LRU or group of three LRUs. Fault isolation shall be manually initiated, with all manual actions requested via prompts.

In addition to isolating equipment failures, the off-line diagnostic capability shall verify the correct operation of the equipment after the failure has been corrected.

3.7.6.2 Training Support

Support shall be provided for both maintenance and operational training,

including OJT.

3.7.6.2.1 Maintenance Training Support

For maintenance training, both operational equipment and maintenance support equipment shall be provided. The maintenance support equipment shall contain those portions of the maintenance support equipment described in Section 3.7.6.1.3 for the maintenance depot which are required for maintenance training.

3.7.6.2.2 Operational Training Support

Operational equipment, training support equipment, and software shall be provided to support operational training at each of the NEXRAD training facilities (see Section 3.1.1.6.3).

3.7.6.2.2.1 Operational Equipment

A set of operational data processing and display and data entry equipment with appropriate software shall be provided to each NEXRAD operational training facility. Each set shall include multiple training consoles and shall support training for all operational personnel.

3.7.6.2.2.2 Training Support Equipment

All equipment required to support training as called out in the Government approved, contractor prepared, Training Plan shall be provided by the contractor.

3.7.6.2.2.3 Operational Training Software

Software shall be provided as required to support operational training at each NEXRAD operational training facility. Software for on-the-job training at NEXRAD operational facilities shall be provided as specified in Section 3.7.6.4.7.

3.7.6.3 Development and Test Support

A development and test facility, referred to as the Operational Support Facility (OSF), will provide the Government a facility for development and test of hardware and software changes (see Section 3.1.1.6.4). This facility shall contain the first article NEXRAD Unit, upgraded to production configuration and quality during the Limited Production Phase. The development and test facility, along with support software, as defined in Section 3.7.6.4, and all required support hardware, shall provide the Government with the capability to perform NEXRAD operational software maintenance and enhancements, perform system performance evaluations for any hardware or software changes prior to field implementation, and evaluate new meteorological analytic techniques prior to field implementation.

3.7.6.4 Support Software

The following support software capabilities shall be provided:

1. Adaptation Data Generation
2. Data Maintenance
3. Software Development and Production
4. System Generation
5. Software Maintenance

6. Computer Performance Monitoring
7. OJT Training Support
8. Test Data Generation
9. Test Software
10. Program Support Library

3.7.6.4.1 Adaptation Data Generation

Adaptation data* is that data which is used in calculations that relate to a specific RDA, RPG, or PUP site. This data includes the latitude, longitude, and elevation of a site and the geographic information used to generate maps applicable to that site.

Adaptation data generation software shall include:

1. The capability to generate adaptation data for the entire system or any subset of the entire system, and store the generated data on a mass storage device,

2. The capability to accept input from an operator's console or an input file which specifies which adaptation data to generate and how to generate it,

3. The capability to add, modify, or delete data from the adaptation data base, and

4. The capability to translate map coordinates given in latitude and longitude to display coordinates.

3.7.6.4.2 Data Maintenance

The capability shall be provided to perform maintenance activities (e.g., corrections, updates, additions, and deletions) on data used within the RPG and PUP functional areas. This capability will be used primarily to maintain the adaptation, geographic data bases and special characters and symbols associated with the RPG and PUP functional areas, although the uses of the data maintenance capabilities should not be limited to these three functions.

3.7.6.4.2.1 Adaptation Data Maintenance

The adaptation data* maintenance software shall include:

1. The capability to identify a particular set of adaptation data and copy it from a mass storage device,

2. The capability to make local changes to the adaptation data base for a particular facility,

3. The capability to merge a local adaptation data base with a more general adaptation data base and produce a single composite data base, and

4. The capability to record all changes and additions made to the adaptation data base.

---

* Defined in Appendix B.

3.7.6.4.2.2 Geographic Data Maintenance

The geographic data maintenance software shall include:

1. The capability to identify a particular set of geographic data and copy it from a mass storage device,

2. The capability to make local changes and additions to a geographic data base,

3. The capability to combine two or more maps into a single map and retain this map for later use, and

4. The capability to record all changes made to the geographic data base.

3.7.6.4.2.3 Special Symbol Maintenance

The special symbol maintenance shall include:

1. The capability to re-define the special symbol set by re-defining the pixel elements corresponding to each of the symbols, and

2. The special symbols shall consist of at least a 7 x 9 pixel matrix.

3.7.6.4.3 Software Development and Production

All software required to develop and maintain the NEXRAD System shall be provided to a central Government facility. For all software, the contractor shall provide the executable form of the software, the source code, and all CDRL documentation and training aids. At least the following software shall be provided:

1. Compiler(s). This software is used to translate programs written in a high order language. The compiler shall produce relocatable machine code that is compatible with the linking and loading requirements of the hardware in use.

2. Assembler. This software is used to translate programs written in mnemonic assembly language into absolute and relocatable machine code. The assembler shall have the capability to handle macro routines. The output of the assembler shall be compatible with the linking and loading conventions of the hardware.

3. Linker. This software produces relocatable machine-executable code from the outputs of the assembler and the compiler. The linker shall be able to combine modules produced by both the assembler and the compiler into a single executable entity. The linker shall also support the use of overlays and user-produced, run-time libraries and shall have the capability to produce detailed listings describing the executable code.

4. Run-Time Libraries. This set of relocatable routines resolves external references generated by the linker. At a minimum, run-time libraries shall be provided to resolve the external references associated with the outputs of the compiler and the assembler.

5. Loader. This software takes the output of the linker, loads it into memory, and initiates its execution (in conjunction with the operating system). The loader shall have the capability to resolve relocatable addresses and to handle overlays.

6. Text Editor. This software enables a user to create and manipulate files that contain source language statements or data. The text editor shall be usable in an interactive mode.

7. File Maintenance Utilities. This software provides general file handling capabilities for both program and data files. The file maintenance utilities shall have the capability of creating and maintaining run-time libraries.

8. Sort/Merge Utility. This software provides for sorting and merging data files. The sort/merge utility shall be callable from a routine written in a high order language or in assembly language. It shall also be usable as a stand-alone program.

9. Debugger. This software enables a user to execute symbolically a program written in either assembly language or a high order language from an interactive terminal. The debugger shall provide the following features:

   a) Single step execution of the program being debugged,

   b) Setting of breakpoints both symbolically and by line number,

   c) The ability to examine the values of variables, the contents of memory, and the contents of registers,

   d) The ability to change variable values and register or memory contents during the course of a debugging session,

   e) The ability to selectively debug subroutines contained as part of a larger main program,

   f) The ability to turn the debugging feature on and off without changing the source code of the routines being debugged, and

   g) The ability to debug real-time programs at the interrupt level.

3.7.6.4.4 System Generation

System generation is the process of building a software system from its component parts. System generation software shall perform the selection of the required components for a system, the application of the necessary updates, and the construction of the executable version of the software. To aid in this process, special utility programs are used to simplify and speed up the system generation. The following system generation programs shall be provided to a central Government facility:

1. Adaptation Data Base Utility. This program is used to

manipulate the site-specific adaptation data associated with each user site. This program shall take the adaptation data generation for each site and put it in the format required by the operational software that processes this data. This program shall have the capability to run interactively, using prompts to solicit all operator input, or to run in batch mode.

2. System Generation/Integration Utility. This program is used to create the executable software, including all application and system software required as part of the RDA, RPG, and PUP functional areas. This program shall use the software development and production software packages (e.g., assembler, compiler, and linker) to create executable software either entirely from source code or from a combination of previously compiled or assembled modules and newly created or modified source modules. This program shall have the capability of being run as a background task in parallel with other development work. It shall be capable of being run in either a batch or an interactive mode. All indirect command files or skeleton runstreams required to run this program shall be provided.

3. System Delivery Utility. This program is used to format a copy of the software system required for each computer site in the network whenever a new software system is generated. The program shall produce as output the properly formatted software corresponding to the configuration at each site. This output shall be placed on the selected storage medium. The input to the system delivery utility will be the output of the system generation utility and the appropriate output of the adaptation data base utility. This program shall operate in either an interactive mode, with prompts for all required operator input, or in a batch mode.

4. Bootstrap Loader. This program is used for the initial loading of the system software. The bootstrap loader shall be permanently resident in nonvolatile memory and shall be initiated by the operator, once the system is powered up, via a single switch. Once the operating system is loaded, the bootstrap loader shall relinquish control to the operating system. The bootstrap loader shall be initiated by the operator during a startup. In the event of a restart after a short-term power failure or other recoverable error, the bootstrap loader shall be capable of being initiated automatically.

3.7.6.4.5 Software Maintenance

The capability to perform maintenance on the operational software shall be provided. This shall include:

1. The capability to make a change in the executable form of a program without recompiling or relinking (The change is made by altering, adding, or deleting machine language instructions, or data in machine-readable form, and is commonly called "patching."),

2. The capability to display the contents of memory,

3. The capability to set breakpoints under operator control, and

4. The capability to display the current system configuration (hardware and/or software) without interrupting system operation.

3.7.6.4.6 Computer Performance Monitoring

A capability shall be provided to record information concerning the utilization of the various equipment items and to format this information into a form suitable for output as a report. At a minimum, this capability shall provide the following information (average and peak):

1. Memory Utilization

2. CPU Utilization

3. Mass Storage Utilization

4. I/O Channel Utilization

5. Communications Line Utilization

6. Response Time

The above information shall be used to generate a periodic report. The report shall be capable of being printed on a hardcopy device.

3.7.6.4.7 OJT Training Support

Training software shall be provided to support OJT within a PUP. A PUP shall be able to perform OJT independently of whether the RPG or any other PUP in the NEXRAD Unit is operational. (Training software required to support the NEXRAD training facility is defined in Section 3.7.6.2.)

During OJT, the training software shall enable a PUP operator to access the entire range of functions performed by the operational software using either live or recorded data. During OJT, the operator shall be able to select portions of the operational data base for training purposes, and also be able to build and maintain a data base to be used exclusively for training.

Training software shall permit PUP OJT while simultaneously monitoring the associated RPG interface for alert messages; in this case, products, with the exception of alert messages, need not be processed by the PUP (although they shall be retained in the RPG data base). When an alert message is received by a PUP performing OJT, it shall be presented to the PUP operator in accordance with Section 3.7.3.3.7.

3.7.6.4.8 Test Data Generation

Test data generation software shall be provided for use in developing, testing, and maintaining the NEXRAD operational software and in training NEXRAD operators, users, and maintenance personnel. The data generated shall be stored in a transportable, machine readable form.

The test data generation software shall provide the capability to generate simulated radar data, including noise returns and echoes, and

to process inputs which specify the characteristics of the test data to be generated.

3.7.6.4.9 Test Software

Test software shall be provided to verify the performance of the operational software.

The test software shall:

1. Be operable in an interactive mode with prompting for all required inputs,

2. Be operable in an automatic mode requiring minimum operator action,

3. Generate formatted output products that show the responses associated with each input and the cumulative results for each test,

4. Include data samples that are both within and outside the range specified for the function under test, and

5. Be subject to the same quality control procedures as the operational software.

3.7.6.4.10 Program Support Library (PSL)

An automated PSL shall be built for use throughout the software development project in accordance with requirements stated herein (unless an existing or an alternative plan is specifically agreed upon as an acceptable functional equivalent by the Government). The PSL and its related documentation shall be delivered to the Government with unlimited data rights.

The PSL shall consist of computer programs and a data repository which shall be established and maintained under control of a librarian. Facilities and procedures for the generation, storage and maintenance of all software shall be implemented. This implementation shall provide for full privacy/access constraints, documentation support, and management data collection and reporting. The procedures established shall provide the following:

1. The identification and delegation of responsibilities for clerical and record keeping functions associated with the programming process and the maintenance of the library,

2. The delegation of responsibilities for all machine operations with regard to such items as project initiation/termination, program test philosophy, and output media/frequency,

3. The procedures for recording, cataloging, and filing of all code generated on the project, both intermediate and final, and for the retention of superseded code for stated retention periods,

4. A method for controlling and building multiple versions of the code contained in the library and a method for providing visibility into this process by configuration management

personnel, and

5. A method for collecting and disseminating basic management data on the use of the library facilities and status of the programming activities.

4. QUALITY ASSURANCE

This Quality Assurance section establishes the Test and Evaluation (T&E) requirements for the NEXRAD System.

4.1. Scope of Test and Evaluation

Quality Assurance T&E includes Development Test and Evaluation (DT&E), Production Acceptance Test and Evaluation (PAT&E), and Operational Test and Evaluation (OT&E).

DT&E is that T&E required during the acquisition of the NEXRAD System to satisfy the Government that the baseline requirements have been met. DT&E covers all functional areas within the system, all configuration items of hardware and software (including firmware), all internal and external interfaces, and all automatic test equipment hardware and software.

PAT&E is that T&E conducted to demonstrate that items procured fulfill the requirements and specifications of the procuring contract or agreements.

OT&E is that T&E which evaluates the operational effectiveness and suitability of the NEXRAD system in its operational environment. The Government is responsible for the planning and conduct of OT&E. OT&E will be conducted in the Validation, Limited Production, and Production Phases.

4.1.1 Test Phases

Test and evaluation activities are required during the Validation, Limited Production and Production Phases. The Validation Phase test and evaluation is described in detail in Section 4.2. The Limited Production Phase test and evaluation is described in Section 4.3, and the Production Phase test and evaluation is described in Section 4.4.

4.1.2 General Test Requirements

The following general test requirements are common to all parts of the NEXRAD T&E. The contractor shall satisfy these requirements in the preparation of the detailed test documentation defined herein and in the conduct of the required tests.

1. The Government will have the right to witness all tests. However, the Government may choose to accept written proof of satisfactory completion of certain factory tests in lieu of being present to witness the test.

2. The Government may require a test of any baseline requirement. The contractor is required to update test documentation to reflect changes in test requirements that result from changes to the baseline requirements, unless otherwise stated in the applicable contract change.

3. The contractor shall provide all test documentation defined herein, all test inputs, all test software, all test instrumentation (properly calibrated), and all test personnel resources needed for testing, unless specifically stated otherwise in this document or in the contract.

4. Copies of all documents referenced in contractor prepared test documentation shall be provided to the Government. These copies shall be provided at the time of the initial submission of the related test documentation.

5. Successful completion of software and hardware tests will be used to mark particular milestones and to gauge contractor progress. Final acceptance of items required by the contract will occur as a result of successful completion of applicable system level tests of NEXRAD Units.

6. Pretest inspections shall be required prior to each test. The test inspections shall ensure that the test configuration is in accordance with approved test procedures, that the equipment and software are at the correct revision level, and that prior deficiencies or discrepancies have been corrected. The test inspections shall also ensure that all test documentation and test equipment are available.

7. The Government shall be notified by the contractor at least 30 working days in advance of planned tests, with reconfirmation provided to the Government 10 working days in advance of the scheduled tests.

8. The configuration for each test shall be identified by the contractor in the test plans. Selection of the test configuration shall be supported by reliability/availability data and proof that all equipment, software, and interfaces will be exercised.

9. Completion of tests defined herein shall not in any way void the warranty and latent defects clauses of the contract, nor shall it in any way relieve the contractor from delivering a compliant system in accordance with the contract.

10. The Government may, at its discretion, require retest of previously completed tests where it is judged by the Government that correction of a deficiency may affect the results of prior testing. However, for Commercial-Off-The-Shelf equipment (unmodified by the NEXRAD system contractor), retest shall not be required for alternate (both earlier and later) revisions or part number changes that do not affect form, fit, or function to the same vendor commercial equipment when such changes were not implemented to correct a deficiency identified in prior NEXRAD testing. In such a case the contractor shall be solely responsible for verifying that the other versions of the equipment meet all applicable NEXRAD requirements.

11. The Government can stop any test if progress is not adequate and major retesting will be required.

4.1.3 Documentation Requirements

The contractor shall submit detailed test documentation. Each document shall be submitted to the Government in accordance with the requirements and schedules defined in the Contract Data Requirements List. Descriptions of the test documents are contained in the set of Data Item Descriptions which are referenced in the Contract Data Requirements List

and form part of the contract.

4.1.3.1 Test Plans

The contractor shall submit a test plan for each of the program phases. The test plans shall describe in specific terms how the contractor will satisfy the requirements of the specifications. The approved test plans shall serve as the basis for preparation of the test procedures.

4.1.3.2 Test Procedures

The contractor shall submit detailed test procedures. The procedures shall be based on the specified test requirements. Separate test procedures shall be submitted for each major test to be performed as defined in the approved test plans.

4.1.3.3 Test Data Sheets

The contractor shall provide test data sheets consistent with the test procedures. The test data sheets will be used by the personnel conducting and witnessing the tests to record the results of each step defined in the test procedure.

4.1.4 Test Results

The contractor shall provide test logs and test reports to document the results of tests.

4.1.4.1 Test Logs

The contractor shall maintain a test log (test record) during conduct of all NEXRAD tests. The test log shall, as a minimum, contain:

1. Results of pretest inspections,
2. Exceptions to approved test procedures and test configurations,
3. Start and completion times of tests,
4. Test anomalies, including unexpected test results or equipment failures,
5. Corrections taken to fix test anomalies,
6. Results of retesting performed to verify corrective actions, and
7. Test procedure paragraph reference and the date and time of entry.

4.1.4.2 Test Reports

Copies of the completed test data sheets and test logs, along with a summary of test results, shall be provided. Further, the Government may request additional information beyond the written test reports from the contractor on the results of specific tests.

4.1.4.3 Other Test Documentation

The contractor shall provide other documents, listings, and supporting data required to document the results of the NEXRAD tests.

4.2 Validation Phase T&E

The Validation Phase DT&E shall include the following test categories:

1. Risk Reduction Verification
2. Configuration Item Reliability Predictions
3. Configuration Item Performance Tests
4. Computer Program Configuration Item Tests
5. Functional Tests
6. System Tests

The tests shall be based on plans and procedures prepared by the contractor. Validation Phase testing is the contractor's responsibility and shall be performed at the contractor's plant or a demonstration site selected by the contractor. The Government will observe, at its discretion, all tests performed by the contractor during the Validation Phase.

The Government plans to conduct limited OT&E during the Validation Phase using contractor and Government equipment. Contractor support shall consist of technical assistance, training, and use of equipment and facilities. The quantity and type of support will be defined in the contract. The contractor shall maintain the equipment during OT&E.

4.2.1 Risk Reduction Verification

The contractor shall demonstrate that the risk analysis and reduction work has sufficiently reduced or eliminated risk to justify proceeding through the full Validation Phase and into the Limited Production Phase. All high risk items shall be either tested or analyzed based on contractor recommendation.

4.2.2 Configuration Item Reliability Predictions

The contractor shall provide reliability predictions of the Configuration Items (CIs). The CI reliability predictions shall use documented failure rate data. Failure rate data for parts and circuits which are not documented shall be validated by statistical analysis of other data sources. For CI reliability prediction:

1. Predictions for off-the-shelf equipment shall be based upon the manufacturer's detailed historical failure data or test data. If such data is not available, the predictions shall be based on the performance and experience with similar equipment.
2. For purposes of predicted reliability analysis, 40°C shall be used as the mean ambient air temperature external to CIs not requiring air conditioning.

3. For CIs requiring air conditioning, 25°C shall be used as the mean ambient air temperature external to the CIs.

4. Fixed ground equipment factors, as defined in MIL-HDBK-217, shall be used in any analytical model that may be produced.

4.2.3 Configuration Item Performance Tests

CI performance tests shall be conducted based on test procedures preparer in accordance with the CI development specifications.

4.2.4 Computer Program Configuration Item Tests

The contractor shall perform testing of the operational and support software prepared during the Validation Phase. The testing of operational and support Computer Program Configuration Items (CPCIs) shall be in accordance with the Computer Program Development Plan. As a minimum, these tests shall ensure that all boundary and out-of-range data input conditions are tested. Included shall be tests of each CPCI, tests of the interfaces between CPCIs, and a load test. The CPCI tests shall verify performance, and shall include verification of all switch actions, displays, and manual inputs associated with each CPCI. The test of interfaces between CPCIs shall be based on a scenario which demonstrates compatibility of CPCIs. The load test shall verify, in normal and full load conditions, the response time requirements specified in Section 3.2.1.1. Tests shall be provided for the following functional areas:

1. The RDA CPCI tests shall verify all applicable requirements specified in Section 3.7.1 and the more detailed functional requirements of the Computer Program Development Specifications. The operability of the RDA functional area in all configurations shall be demonstrated.

2. The RPG CPCI tests shall verify all applicable requirements in Section 3.7.2 and the more detailed functional requirements of the Computer Program Development Specification. The operability of the RPG functional area in all configurations shall be demonstrated.

3. The PUP CPCI tests shall verify all applicable requirements in Section 3.7.3 and the more detailed functional requirements of the Computer Program Development Specifications. The operability of the PUP functional area in all configurations shall be demonstrated.

4.2.5 Functional Tests

The contractor shall perform functional string reliability tests, functional area performance tests, maximum configuration tests, environmental tests, and human engineering tests as defined in the following sections.

4.2.5.1 Reliability Tests

The contractor shall perform tests to demonstrate that each functional string meets the computed reliability based on the availability requirements of Section 3.2.5. The contractor shall also provide the facilities, test personnel, and test equipment for these tests. MIL-STD-781, Test Plan IV shall be used for reliability testing.

4.2.5.2 Performance Tests

Testing of each functional area shall be performed to verify that functional area performance satisfies the requirements of this document.

4.2.5.2.1 RDA Performance Tests

The RDA performance testing of the preproduction system shall consist of a series of tests using the operating parameters established for the site, and using live and recorded weather data. The contractor shall perform tests to verify the performance of the radar and its associated signal processor in the presence of ground clutter and various weather phenomena.

Demonstration of the ground clutter suppression capability shall be accomplished by processing of simulated digitized samples from individual range gates and by the tests described below. For purposes of simulation, the system front end noise may be ignored, but quantization noise and arithmetic precision effects shall be considered. The clutter suppression capability simulation studies will use clutter models A and B, and simulated weather data with various mean velocities and spectrum widths.

The integrated instability residue power measured in the frequency domain shall be at least 50 dB below the peak signal power as measured using one of the equispaced system PRTs on a point target with the antenna in a fixed position.

The signal return from a fixed discrete scatterer (e.g., a corner reflector) in the antenna far field (using the normal radome and at the PRF to be used at low elevation angles) shall be used to provide a clutter model B signal. The suppression of this signal (characterized in accordance with Section 3.7.1.7) shall be no worse than that shown for clutter model B in Tables 3-7 and 3-8 with 5 dB degradation allowed for range testing imperfections.

4.2.5.2.2 RPG Performance Tests

The RPG performance tests shall demonstrate that, under full load conditions, all requirements of this document are met.

4.2.5.2.3 PUP Performance Tests

The PUP performance tests shall demonstrate that, under full load conditions, all requirements of this document are met.

4.2.5.3 Environmental Tests

The contractor shall demonstrate that the system meets the performance and survivability requirements while exposed to the operating and nonoperating environmental conditions specified in Section 3.2.6. The test facilities for environmental testing shall be adequate to accommodate all of the equipment in each functional area except the radar antenna and pedestal. Environmental testing shall be performed in accordance with MIL-STD-810 and MIL-STD-462.

4.2.5.4 Human Engineering Tests

Tests and demonstrations for equipment not exempted by this document shall be conducted on appropriate combinations of equipment items to

verify that the requirements of Section 3.3.7 have been met.

4.2.6 System Tests

Validation Phase system tests shall be performed to verify that the requirements of this document have been satisfied. The system tests shall be conducted using the preproduction NEXRAD Unit.

4.2.6.1 Functional Area Interface Tests

Functional area interface tests shall be performed which demonstrate that the designs of the functional areas of the NEXRAD Unit are compatible and that they interface properly. The functional area interface tests shall provide for communications testing to demonstrate that the communications requirements of this document have been satisfied. Digital data channels between sites performing RDA, RPG, and PUP functions shall be demonstrated to meet specified limits. Communications interfaces external to the NEXRAD Unit shall also be tested.

4.2.6.2 Communications Functional Area Tests

Communications functional area performance tests shall be conducted to demonstrate that under full load conditions, all requirements of this document are met.

4.2.6.3 System Performance Tests

System level performance tests shall be conducted under full load conditions to demonstrate that the system level performance requirements of Section 3.2.1 have been met. Subject to Government approval, the demonstration of system level performance by a combination of test, simulation and analysis is permitted.

4.2.6.4 Maintainability Test and Evaluation

The maintainability requirements of Section 3.2.4 shall be verified by a maintainability prediction and by a maintainability demonstration.

4.2.6.4.1 Maintainability Prediction

An MTTR and MDT prediction shall be made.

4.2.6.4.2 Maintainability Testing

A maintainability demonstration shall be performed on the system, to verify that the maintainability requirements specified in Section 3.2.4 have been met. Maintainability testing shall not start until the predicted MTTRs and MDTs are shown to be equal to or less than the required values. All maintenance fault isolation aids which are provided shall be verified prior to this test. Maintainability testing shall be done in accordance with Test Method 9 of MIL-STD-471A using a consumer risk of twenty percent. The test procedures shall include the list of faults that might be introduced into the equipment, the rationale for the selection of numbers and types of faults for the test, and the procedures to be used. The maintainability demonstration shall be performed using the maintenance techniques of the contractor-supplied maintenance manuals. The number and type of faults in the list shall take into consideration the mean time between failures, the estimated mean time to repair, and the kinds of components within each piece of

equipment so that the list will be representative of the variety of failures that can occur in the system and the maintenance procedures required for repair of failures in accordance with Appendix A of MIL-STD-471A. Government representatives will participate in the selection of sample faults from the list for the conduct of the test. The fact that the system has redundant equipment shall not be a consideration either in selecting or in correcting the faults. The test shall be performed under conditions closely simulating the actual operational conditions. On-line and off-line maintenance diagnostic software and operational system maintenance procedures and concepts shall be used in the tests. Maintainability demonstrations shall also be performed on special and nonstandard test equipment used to isolate component failures on printed circuit boards, memories, power supplies, and other replaceable items.

4.3 Limited Production T&E

The Limited Production Phase PAT&E shall include the following categories:

1. Configuration Item and Computer Program Configuration Item Tests.

2. Factory Tests.

3. Factory System Tests.

4. Installation and Checkout Tests.

The specific tests identified within each category shall be performed by the contractor. For each Limited Production Phase unit, testing shall be performed at the contractor's plant and at the NEXRAD installation site. The Government will observe, at its discretion, all tests performed by the contractor during the Limited Production Phase.

The Government plans to conduct OT&E during the Limited Production Phase, on NEXRAD Units. Contractor support shall consist of technical assistance, training and logistics. The quantity and type of support will be defined in the contract.

4.3.1 Limited Production Configuration Item and Computer Program Configuration Item Tests

During the Limited Production Phase, all equipment and software shall be in full compliance with the CI and CPCI specifications, fully operable, and free of defects. DT&E tests shall be performed on those CIs and CPCIs which have not been fully tested during the Validation Phase, or which have undergone change as a result of the Limited Production Phase. However, retest shall not be required for other (both earlier and later) revisions or part number changes that did not affect form, fit or function to the same vendor commercial equipment when such changes were not implemented to correct a deficiency identified in NEXRAD testing. In such a case the contractor shall be solely responsible for verifying that the other versions of the equipment meet all applicable NEXRAD requirements.

4.3.1.1 Maximum Unexpanded Full Configuration Test

It shall be demonstrated that the NEXRAD RPG and PUP functional areas can meet the narrowband communication line configuration unexpanded

limit requirements specified in paragraphs 3.2.1.8, 3.7.2.5.13 and 3.7.3.6.6. This shall be accomplished by functionally exercising up to 8 lines in each line class, concurrently.

4.3.1.2 Maximum Full Expansion Configuration Test

It shall be demonstrated that the NEXRAD RPG and PUP functional areas can meet the narrowband communication line configuration expanded limit requirements specified in paragraphs 3.2.1.8, 3.7.2.5.13 and 3.7.3.6.6. This shall be accomplished by functionally exercising up to 8 lines in each line class, concurrently.

4.3.2 Limited Production Factory Tests

The contractor shall perform Factory Tests for all hardware to demonstrate the proper assembly and operability of each item. The scope of each Factory Test shall be defined in the test plan and is subject to Government approval.

4.3.3 Limited Production Factory System Tests

The contractor shall perform Factory System Tests of NEXRAD operational equipment. The factory system testing shall test complete NEXRAD Units and other operational equipment except for testbed equipment retained at the factory. The testbed equipment may consist of the tower, pedestal, antenna, radome, waveguide, tower/pedestal cabling, and ancillary equipment such as backup power and air conditioning equipment. The contractor may use devices to simulate the pedestal, tower, utilities, and/or generator. The testbed equipment shall be dependent on the test being performed and shall be subject to Government approval. The factory system test shall demonstrate proper operation of NEXRAD operational equipment.

4.3.3.1 Limited Production Model System Performance Tests

Tests shall be performed to demonstrate achievement of the system performance requirements of this document. These tests shall include verification of throughput, response times, and other performance requirements under full load conditions. These tests shall verify that the requirements of Section 3.2.1 have been met.

4.3.3.2 Factory Stability test

A 72-hour stability test* shall be performed on selected Limited Production Phase NEXRAD operational equipment prior to delivery. All computers shall use operational software during the stability tests. In the event of a failure, the software and hardware problems shall be isolated and corrected and the stability test continued.

4.3.4 Limited Production Installation and Checkout Tests

The contractor shall perform installation and checkout tests on all Limited Production Phase NEXRAD equipment (operational and support).

These tests shall include equipment tests, software tests and field system tests. These tests, which will be performed in a sequential manner, shall show proper equipment installation, operation and performance. Equipment deficiencies and required corrective actions

---

* Defined in Appendix B.

shall be identified.

Using statistical sampling techniques approved by the Government and identified in the contractor's Hardware Quality Program Plan, the contractor's quality assurance organization shall verify the accuracy of the delivered equipment versus the product baseline. Verification shall be accomplished on-site by sampling LRUs from the delivered equipment for a 90% confidence level for the remaining Bloomfield-produced systems and the first five Huntsville produced systems. The contractor shall disengage boards, but shall not disassemble equipment to sample any LRUs. The confidence level will then be reduced from 90% to 70% if equipment matches the product baseline, and shall be maintained at the 70% level as a minimum for all remaining sites. If the equipment does not match the product baseline, the confidence level shall revert back to 90% for all remaining systems. The Government may witness these on-site verifications.

4.3.4.1 Equipment Tests

The contractor shall perform power-off, power-on, and interface verification tests.

4.3.4.1.1 Power-Off Tests

The power-off tests shall verify equipment serial numbers and configurations, proper electrical connections, and equipment wiring continuity.

4.3.4.1.2 Power-On Tests

The power-on tests shall verify proper voltage and current readings, input and output signals, indicator and switch operations, and certain performance characteristics.

4.3.4.1.3 Interface Verification Tests

The interface verification tests shall provide verification of proper signal transfer across interfaces, proper generation of interface signals, and proper independent operation of equipment when correctly interfaced.

4.3.4.2 Software Tests

The contractor shall provide installation and checkout tests of all software, including both operational and support, to verify proper operability at the site.

4.3.4.2.1 Processing Tests

Processing tests shall include installation and checkout tests to demonstrate that the operational software interfaces properly with the installed equipment and that it has been correctly adapted for the operational environment. The processing tests shall demonstrate the acceptance and correct processing of radar data and user requests. Both live and recorded radar data shall be used to demonstrate that the software is operable in the on-site data processing equipment.

4.3.4.2.2 Adaptation Data Verification

During installation and checkout testing at each site, the contractor shall demonstrate that all adaptation data has been correctly inserted. Geographic maps, site locations and product menus are examples of site adaptation data that must be demonstrated as well as communications with and data receipt from remote rain gage data acquisition computer(s).

4.3.4.3 Limited Production Field System Tests

The contractor shall perform on-site system testing on Limited Production Phase NEXRAD operational equipment. The field tests shall demonstrate that all equipment, systems and controls are fully operable, that external interfaces operate properly and that all requirements are met for the exchange of data between different facilities. The contractor shall specify appropriate portions of the System Performance Tests (4.3.3.1) to be performed to verify full system operability.

The Limited Production Field System Test on each unit and all non-associated PUPs with a dedicated communications line to a previously installed RPG shall include a 72 hour stability test. All computers shall use operational software during the stability tests. In the event of a system fault*, the software and hardware problems shall be isolated and corrected and the stability test continued.

The Government shall be allowed to perform operations on all associated PUPs during the stability test. If maintenance on an associated PUP is mandatory during the test, the contractor may allow the Government to perform the corrective action. Associated PUP failures or software malfunctions during the 72-Hour Stability test shall be considered a system fault. If an associated PUP encounters a system fault, the clock for the system under test stops but is not reset (as per para 6.3.4.3 Production Test Plan) during the first 66 hours of test. If more than one associated PUP goes down for any system fault in the last 6 hours of test, the test clock will be restarted at hour 66 upon repair of those PUPs.

4.4 Production Phase T&E

The Production Phase PAT&E shall be performed on all Production Phase NEXRAD operational equipment. The production testing shall be performed both at the contractor's facility and at the installation sites. The production testing shall be performed at configuration levels that range from CIs and CPCIs to the NEXRAD Unit level.

4.4.1 Full Scale Production Factory Tests

The contractor shall perform Factory Tests for all hardware to demonstrate the proper assembly and operability of each item. The scope of each Factory Test shall be defined in the test plan and is subject to Government approval.

4.4.2 Full Scale Production Factory System Tests

The contractor shall perform factory system tests of selected operational equipment. The factory system test shall test complete NEXRAD Units and other operational equipment except for testbed equipment retained at the factory. The testbed equipment may consist of

---

* Defined in Appendix B.

the tower, pedestal, antenna, radome, waveguide, tower/pedestal cabling, and ancillary equipment such as backup power and air conditioning equipment. The contractor may use devices to simulate the pedestal, tower, utilities, and/or generator. The testbed equipment shall be dependent on the test being performed and shall be subject to Government approval. The factory system test shall demonstrate proper operation of NEXRAD operational equipment.

4.4.3 Full Scale Production Installation and Checkout Tests

The contractor shall perform installation and checkout tests on all delivered NEXRAD operational equipment. The installation and checkout tests shall be performed on-site to verify correct installation and to establish readiness for site system testing. Separate test procedures shall be used for each type of site configuration. Both hardware and software testing shall be included. The software test shall demonstrate the correct installation and checkout of operational and support software at each site. The software test shall also demonstrate the correct interface of the different facilities which comprise the NEXRAD operational equipment and shall demonstrate that all adaptation data has been correctly inserted. The installation and checkout tests shall include on-site system testing on Production Phase NEXRAD operational equipment to demonstrate that all equipment, systems and controls are fully operable, that external interfaces operate properly and that all requirements are met for the exchange of data between different facilities. Appropriate portions of the Limited Production Model System Performance Tests (4.3.3.1) shall be included to demonstrate full operability.

The Installation and Checkout Tests shall include a 72 hour stability test in accordance with the requirements of NTR paragraph 4.3.4.3. All computers shall use operational software during the stability tests. In the event of a failure, the software and hardware problems shall be isolated and corrected and the stability test continued.

Using statistical sampling techniques approved by the Government and identified in the contractor's Hardware Quality Program Plan, the contractor's quality assurance organization shall verify the accuracy of the delivered equipment versus the product baseline. Verification shall be accomplished on-site by sampling LRUs from the delivered equipment for a 90% confidence level for the remaining Bloomfield-produced systems and the first five Huntsville produced systems. The contractor shall disengage boards, but shall not disassemble equipment to sample any LRUs. The confidence level will then be reduced from 90% to 70% if equipment matches the product baseline, and shall be maintained at the 70% level as a minimum for all remaining sites. If the equipment does not match the product baseline, the confidence level shall revert back to 90% for all remaining systems. The Government may witness these on-site verifications.

R400-IN401
August 1990

APPENDIX A
NEXRAD INTERFACE CONTROL DOCUMENT(ICD)

ISSUE DATES OF ICD REVISIONS

February 1982	R400 -IN102 System Definition Phase
September 1983	R400A-IN201 Validation Phase Part I
May 1984	R400B-IN201 Validation Phase Part II
October 1984 (update)	R400C-IN201 Validation Phase Part II
December 1985	R400 -IN301 Limited Production Phase
August 1990	R400 -IN401 Limited Production Phase

1. INTRODUCTION

This interface Control Document (ICD) identifies the narrowband communication requirements for both intra and inter NEXRAD Unit interfaces.

Intra NEXRAD Unit communications consist of those links between equipment performing the Radar Product Generation (RPG) functions and equipment performing the Principal User Processor (PUP) functions associated with the RPG. Inter NEXRAD Unit communications consist of those links between selected equipment in different NEXRAD Units and/or equipment in a NEXRAD Unit and Principal User external systems and/or equipment in a NEXRAD Unit and Other Users.

1.1 Purpose

The purpose of this document is to define the requirements for the NEXRAD narrowband communications interfaces. For the NEXRAD Unit interfaces, this document identifies applicable standards and defines the protocol, syntax, and meaning of the binary data transmission frames.

1.2 Scope

This ICD is not intended to serve as a tutorial document concerning the applicable standards. That is, the reader is assumed to be generally knowledgeable of the contents, terminology, etc., of the standards. This document maps the unique NEXRAD aspects of the narrowband communications into the appropriate standard.

The remainder of this ICD consists of two sections and two appendices as follows:

- Section 2.0 defines the NEXRAD interfaces and discusses the International Standards Organization (ISO) Open System Interconnection (OSI) Reference Model concept.
- Section 3.0 specifies the protocol and data formats for each level of interface described in Section 2.0. The appropriate standard is referenced where appropriate.
- Section 4.0 lists the applicable federal and international standards and provides the sources for these standards.
- Section 5.0 contains a glossary of terms used in the NEXRAD ICD.

2. GENERAL INTERFACE CHARACTERISTICS

The first part of this section enumerates the classes of NEXRAD communication lines and describes their functional characteristics. The second part defines layers of NEXRAD interfaces based on the OSI Reference Model. The layer concept is used because it helps to structure and classify NEXRAD data transport protocols and the hierarchical structure is useful for determining the entire set of NEXRAD communication interfaces. The layers defined explicitly in this ICD are the physical, data link, and network. Specification of the higher layers is combined in a product data format layer. This combined layer accommodates the purpose of the NEXRAD ICD by defining the format for NEXRAD product response and request messages.

2.1 Classes of NEXRAD Communications Lines

Five classes of communication lines are defined. The classes are (1) associated PUPs/ARTCCs; (2) non-associated PUPs/RPG operational position; (3) Principal User external systems; (4) Other Users; and (5) rain gage data collection/RFCs.

2.2 Interface Hierarchy

The following description of interface levels is based on the seven-layer Open Systems Interconnection Reference Model under development by the ISO.

The seven layers can be split into two subsets: those concerned with data transport and those concerned with data management. Sections 2.2.1 through 2.2.4 cover the four layers (physical, data link, network and transport) that control data transport. The data management layers (application, presentation and session) are combined into a product data format layer. This layer is described in section 2.2.5.

2.2.1 Physical Layer

The physical layer provides a place for the electrical and mechanical equipment element interface. The signal characteristics, pin connection structure, and interchange circuits are defined at this layer of the hierarchy.

2.2.2 Data Link Layer

At the data link layer, the control information and procedure for establishing communication links are defined. The functions of the RPG and users are described in terms of roles as logical stations operating in logical states and modes.

2.2.3 Network Layer

The network layer provides the means to establish, maintain and terminate network connections. It provides for all switching, routing, and relaying of information. The network headers contain fields controlling the data flow.

2.2.4 Transport Layer

The transport layer provides control of data transportation from the source to the destination. At this level the data are in the form of messages. The source and destination address/identification are specified and message control features are defined.

2.2.5 Product Data Format Layer

This layer describes the encoding of the informational contents of a transport message. A complete set of information at this layer defines specific products and product requests.

3. NEXRAD INTERFACE CONTROL SPECIFICATIONS

The NEXRAD ICD defines data transfer between the RPG or PUP and the NEXRAD users. The physical interconnection between data terminal equipment and data communication equipment is defined. The data

communication protocol for establishing each interface is specified.

Each communications line shall support the transfer of messages. These messages shall contain NEXRAD control information and/or data. The data consist of product responses, product requests, data responses, or data requests. Each of these can be transmitted in only one direction. The product response and data request messages can be transmitted only from the NEXRAD RPG or PUP to the appropriate user. Data response and product request messages can be transmitted only from an appropriate user to a NEXRAD RPG or PUP. The control and formatting of all messages shall conform to the formats and procedures described in this document. The bytes (one byte = eight bits) and bits shall be transmitted such that the low-ordered bits within a byte are transmitted first and the bytes are transmitted in sequential order.

This section contains subsections which consist of the protocol specifications for a given layer in the interface hierarchy. The subsections discuss synchronous communications protocol, which is appropriate for all classes of NEXRAD communications lines. Table A-1 matches the appropriate NEXRAD standard for formatting convention with each model layer.

3.1 Physical Layer

This section specifies the interface standards for the data terminal equipment (DTE) and data communications equipment (DCE) interface. It also provides general information concerning modem equipment characteristics and communication link characteristics for NEXRAD.

3.1.1 DTE/DCE Interface

The DTE/DCE interface shall be specified by both EIA Standards RS-449 and RS-232-C. All DTEs shall conform to RS-449. The DCEs may conform to RS-449 or to RS-232-C with adapters to RS-449. Industrial Electronics Bulletin (IEB) No. 12 provides interconnection information between RS-449 and RS-232-C. The following sections specify the electrical and mechanical characteristics and the set of interchange circuits for NEXRAD units in accordance with the standards.

3.1.1.1 Signal Characteristics

The general signal characteristics shall be defined by Section 2.0 of EIA Standard RS-449, which requires EIA Standards RS-422 and RS-423 (which have been revised as RS-422-A and RS-423-A, respectively) to specify the electrical signal characteristics. Interconnection between RS-449 and RS-232-C is described in Section 2.1 of IEB No. 12.

3.1.1.2 Mechanical Characteristics

The mechanical interface equipment and connectors specifications shall follow Section 3.0 of RS-449. For interconnection with RS-232-C an adapter will be necessary. Refer to Section 2.3 of IEB No. 12 for interconnection with the commonly used 25-pin connector.

3.1.1.3 Data Transmission Circuit Configuration

The standard data transmission configurations Type SR (Send-Receive) in RS-449 and the corresponding interface type D (RS-232-C) shall be used for NEXRAD. The interchange circuits for this configuration are as specified in Section 5.0 and as defined in Section 4.0 of the respective

TABLE A-1 NEXRAD STANDARDS AND CONVENTIONS AT EACH INTERFACE LAYER

Layer	Class 1	2	3	4	5a	5b
Product Data Format	C	C	SF	C	SH	SF
Transport	C	C	SF	C	C	SF
Network	X	X	X	X	X	X
Data Link	X	X	X	X	X	X
Physical	R	R	R	R	R	R

C = Contractor Specified
SF = Standard Formats
X = CCITT Recommendation X.25
R = RS-449/RS-232-C
SH = SHEF*

* The SHEF format shall be used for data transmitted to NEXRAD. The formats of all data transmitted from NEXRAD to the rain gage data acquisition computers are the responsibility of the contractor.

standards. IEB No. 12 defines the correspondence of circuits between the two standards.

3.1.2 Communication Line Facility

The general modem and communication link characteristics shall be as specified in Section 3.7.4 of the NEXRAD Technical Requirements. The transmission line characteristics of each of the five classes of narrowband communications interfaces as defined in Section 2.1 are listed in Table A-2.

TABLE A-2 NEXRAD TRANSMISSION LINE CHARACTERISTICS

Interface	Link	Type	Rate (bps)	Timing
Class 1	Dedicated	Full Duplex	9600/4800	Synchronous
Class 2	Dial-Up	Full Duplex	9600/4800	Synchronous
Class 3	Dedicated	Full Duplex	9600/4800	Synchronous
Class 4	Dial-Up	Full Duplex	9600/4800	Synchronous
	Dedicated	Full Duplex	9600/4800	Synchronous
Class 5	Dial-Up	Full Duplex	9600/4800	Synchronous

3.2 Data Link Layer

The data link layer shall control data transmission across the access link. Both the user data and control information shall be transferred across the access link in transmission units called frames. The main function of the link level protocol is to ensure that the level 3 packets, which are contained within the link level field, shall cross the access link error free.

3.2.1 Access Link for Synchronous Transmission

The access link protocol shall be Link Access Procedure, Balanced (LAPB) implemented for a single link procedure, and shall conform to Section 2 of the 1984 or later CCITT Recommendation X.25, titled "Link Access Procedures Across the DTE/DCE Interface." LAPB control octet shall support the basic modulo 8 or extended modulo 128 operation as shown in Table 1/X.25 and Table 2/X.25 of the CCITT Recommendation X.25.

3.3 Network Layer

The network layer level shall provide the interface required to set up, maintain and clear virtual calls and maintain permanent virtual circuits between DTEs. Both data and control information shall be transferred in transmission units called packets. Each packet transferred across the interface shall be contained within a single link level Information Frame. Only one packet shall be contained in each Information Frame.

3.3.1 Packet Level DTE/DCE Interface

The packet level interface shall conform to Section 3 of the 1984 or later CCITT Recommendation X.25, titled "Description of the Packet Level DTE/DCE Interface." Table 14 of the CCITT Recommendation X.25 provides a summary of the packet types.

3.3.2 Procedures for Virtual Circuit Service

The procedures for the virtual circuit services shall conform to Section 4 of the 1984 or later CCITT Recommendation X.25, titled "Procedures for Virtual Circuit Services."

3.3.3 Packet Format

The packet format shall conform to Section 5 of the 1984 or later CCITT Recommendation X.25, titled "Packet Format." The data packet format octet(s) defining the window size on the logical channels used for virtual calls or permanent virtual circuits shall support basic modulo 8 or extended modulo 128 operation, as shown in the 1984 or later CCITT Recommendation X.25, Figure 6/X.25.

3.4 Transport Layer

The contractor will be responsible for the transport level interface for all interface classes except class 3 and 5b. Class 3 and 5b lines shall follow the Standard Formats for Weather Data Exchange Among Automated Weather Information Systems developed by the Federal Coordinator for Meteorological Services and Supporting Research (FCMSSR). The Standard Formats document specifies the complete format for messages. The

transport layer is concerned with the message header and trailer information.

The following subsections concern the Standard Formats only.

3.4.1 Message Structure

The Standard Formats document defines a message to be constructed of information blocks (Standard Formats Section 2.0). The information blocks contain control, product definition, data description, or data information. All products contain the Product Identification and the End of Product control blocks. These blocks provide the transport level information.

3.4.2 Message Format

The Product Identification block is the first block of the message. This block contains the message header information necessary for transport from source to destination. The End of Product block delimits the end of the message. Each block contains an optional length indicator and checksum (see Standard Formats Section 2.2). Also, each block contains a mode and submode number as defined in Standard Formats Section 3.2.

3.4.2.1 Product Identification Block

The Product Identification Block contains the following fields:

- Originator Identification
- Classification
- Retention Time
- Product Identifier Code
- Product File Time.

These fields are defined in Figure 4.1 of the Standard Formats. Specific NEXRAD codes for the originator identification and product identifier will be supplied by the government at a later date.

3.4.2.2 End of Product Block

The End of Product Block (Standard Formats Section 4.2) contains a particular mode and submode combination (Mode 1, Submode 2) which identifies the end of the message. This block may also contain the optional length indicator and checksum fields.

3.5 Product Data Format Layer

The contractor will be responsible for the product data formats for the RPG to PUP transmission (class 1 and 2), and for other users (class 4). Class 5a, used for rain gage data collection, will not carry products and product requests; the format for rain gage data and messages transmitted to NEXRAD shall be specified by the Standard Hydrologic Exchange Format (SHEF); formats for data transmitted from NEXRAD are the responsibility of the contractor. For class 3, External Systems, and Class 5b, RFC's, the product data formats shall be specified by the Standard Formats.

The following subsections concern the Standard Formats only (unless otherwise specified).

3.5.1 Product Definition

A specific Product Definition Block exists for each data category. The Product Definition Block contains information necessary to define the nature of the product.

3.5.2 Data Categories

The data categories for NEXRAD products are:

- Alphanumeric
- Raster Scan
- Vector Graphic
- Gridded Data

A specific data block is defined for each data category. A data description block (see Standard Formats Section 6.2) may precede the data block. The data description block contains information describing the data in the data block, if it is not inherent in the data block itself.

3.5.2.1 Alphanumeric

Product requests and alphanumeric products shall be specified according to Standard Formats Section 8.0.

All alphanumeric information (whether or not the Standard Formats are employed) shall follow the American National Standard Code for Information Interchange (ASCII) as specified in ANSI X3.4-1977. The character structure for the ASCII code will follow ANSI X3.16-1976. The bit sequencing within the ASCII code shall follow ANSI X3.15-1976. Only those sections of the latter two standards which refer to ANSI X3.4-1977 shall apply.

3.5.2.2 Raster Scan

Raster Scan products shall be specified according to Section 9.0 of the Standard Formats.

3.5.2.3 Vector Graphic

Vector graphic products shall be specified according to Standard Formats Section 7.0.

3.5.2.4 Gridded Data

Gridded Data products shall be specified according to Standard Formats Section 10.0.

4. REFERENCED DOCUMENTS

The following is a list of documents both explicitly and implicitly referenced in this ICD. The list contains the document number, title and originating organization of each referenced document.

4.1 Federal

The Government Open System Interconnect Profile (GOSIP). GOSIP specifies a subset of the OSI protocols, and may be described as a selection of a limited number of OSI protocols from each layer of the OSI Reference Model, as appropriate.

Source: National Institute of Standards and Technology
U.S. Department of Commerce
Gaithesburg, MD 20899

"Standard Hydrologic Exchange Format (SHEF) Version I", NOAA/NWS, Northwest River Forecast Center, Portland, Oregon, Nov. 18, 1982.

"An Explanation of the Standard Hydrologic Exchange Format (SHEF) and Its Implementation in the Central Region", NOAA Technical Memorandum NWS CR-67, Geoffrey Bonnin and Robert S. Cox, Jr., Missouri Basin River Forecast Center, NWS, Kansas City, Missouri, April, 1983.

"The Posting of SHEF Data to the RFC Gateway Database", NOAA Technical Memorandum NWS CR-68, Geoffrey Bonnin, Missouri Basin River Forecast Center, NWS, Kansas City, Missouri, April, 1983.

Source: NOAA - National Weather Service
1325 East-West Highway
Silver Spring, MD 20910

4.2 National Communication Systems (NCS)

NCS TIB 81-1 Open Systems Interconnection (OSI) Reference Model (Nov. 1980)(ISO Draft Proposal (DP) 7498) January 1981.

Source: Office of the Manager
National Communications System
Attn: NCS-TS
Washington, D.C. 20305

4.3 American National Standards Institute (ANSI)

ANSI X3.4-1977 American National Standard Code for Information

ANSI X3.15-1976 American National Standard for Bit Sequencing of the American National Standard Code for Information Interchange in Serial-by-Bit Data Transmission

ANSI X3.16-1976 American National Standard Character Structure and Character Parity Sense for Serial-by-Bit Data Communication in the American National Standard Code for Information Interchange

Source: ANSI, Inc.
1430 Broadway
New York, NY 10018

4.4 Electronic Industries Association (EIA)

EIA-RS-449 General Purpose 37 Position and 9 Position Interface for Data Terminal Equipment and Data Circuit-

Terminating Equipment Employing Serial Binary Data Interchange.

EIA-RS-422-A Electrical Characteristics of Balanced Voltage Digital Interface Circuits.

EIA-RS-423-A Electrical Characteristics of Unbalanced Voltage Digital Interface Circuits.

Industrial Electronics Bulletin No. 12 Application Notes on Interconnection Between Circuits Using RS-449 and RS-232-C.

EIA-RS-232-C Interface Between Data Terminal Equipment and Data Communication Equipment Employing Serial Binary Data Interchange.

Source: Electronic Industries Association
Engineering Department
2001 I Street, N.W.
Washington, D.C. 20006

4.5 Consultative Committee for International Telegraph and Telephone

CCITT Recommendation X.25 1980 and 1984, interface between Data Terminal Equipment (DTE) and Data Circuit-Terminating Equipment (DCE) for terminal operating in the packet mode on Public Data Networks.

Source: OMNICON, Inc.
115 Park St., S.E.
Vienna, VA 22180

4.6 Federal Coordinator

(FCM-S2-1982) Standard Formats for Weather Data Exchange Among Automated Weather Information Systems

Source: Federal Coordinator for Meteorological Services and Supporting Branch
National Oceanic and Atmospheric Administration
U.S. Department of Commerce
11426 Rockville Pike
Rockville, MD 20852

5. GLOSSARY

ANSI - American National Standards Institute

ARTCC - Air Route Traffic Control Center

Block - A related set of bytes containing control information or data. A block is a component of a message.

Byte - Eight contiguous bits.

CCITT - Consultative Committee for International Telegraph and Telephone

Data Management Layers	-	Levels of interface concerned with the encoding, interpretation and use of information.
Data Transport Layers	-	Levels of interface concerned with the transfer of data from source to destination.
DCE	-	Data Circuit Terminating Equipment
DTE	-	Data Terminal Equipment
Frame	-	A segment of a bit stream bounded by a uniquely recognizable bit sequence and containing a specified number of bits or bytes of data.
Information Frame	-	Contains both level two and level three information.
ISO	-	International Standards Organization
LAPB	-	Link Access Procedure, Balanced
Message	-	The complete set of information transported from the source to the destination. A message may be a product, a product request, data, a data request, or NEXRAD control information.
NEXRAD	-	Next Generation Weather Radar
OSI	-	Open Systems Interconnection
Packet	-	A communication block configured to permit independent handling in a packet switching network. In most cases this means configured to be compatible with the CCITT Recommendation X.25.
Product	-	A collection of information that is self-contained and provides a complete representation of a graphical image or an alphanumeric message.
PUP	-	Principal User Processing Functional Area
RFC	-	River Forecast Center
RPG	-	Radar Product Generation Functional Area
SABM	-	Set Asynchronous Balanced Mode
SHEF	-	Standard Hydrometeorological Exchange Format

APPENDIX B

1. Definition Of Terms

1.1 Adaptation Data

Generally, data related to a specific NEXRAD site. This data may consist of geographic boundaries, political boundaries, system configuration, algorithm parameters, telephone numbers (auto dial), or other like data. Such data may be generated at either a centralized location or locally within an RPG or PUP.

1.2 Alarm

An alarm is an attention getting notification, at the RDA and at the UCP, of RDA equipment failure or out of tolerance operating conditions.

1.3 Alert

An alert is the attention getting mechanism associated with receipt of an alert message at an RPG or PUP operational position indicating detection of a significant change in a meteorological parameter or phenomenon.

1.4 Alphanumeric Products

Those products generated within the RPG functional area that present, in an alphanumeric format, some representation of information in base products, derived products, or other alphanumeric products whether manually or automatically generated (e.g., an alert message).

1.5 Associated PUP and RPG

A PUP and RPG combination that is connected by a dedicated full duplex communications circuit.

1.6 Availability (Achieved) - A(a)

The probability that the equipment associated with a specific NEXRAD Unit (one RDA, one RPG, one associated PUP and all necessary communications), when used under stated conditions in an ideal support environment, shall operate satisfactorily at any given time. The calculation of A(a) excludes supply downtime, waiting or administrative downtime, and Government supplied communications equipment. It is expressed as:

$$A(a) = \frac{MTBMA}{MTBMA+M}$$

where:

MTBMA = Mean Time Between Maintenance Actions (failures or preventive maintenance, including induced and no-defect maintenance).

M = Mean Active Maintenance Downtime resulting from both corrective and preventive maintenance actions (including induced and no-defect maintenance).

1.7 Availability (Inherent) - A(i)

The probability that the equipment associated with a specific NEXRAD Unit (one RDA, one RPG, one associated PUP and all necessary communications), when used under stated conditions without consideration for any scheduled or preventive maintenance and in an ideal support environment, shall operate satisfactorily at any given time. The calculation of A(i) excludes preventive maintenance downtime, supply downtime, waiting or administrative downtime and Government supplied communications equipment. It is expressed as:

$$A(i) = f(\text{all } A(j))$$

where: The exact functional relationship is design dependent and shall be defined by the contractor's reliability model and,

A(j) is the availability of the "j^{th}" CI and is given by

$$A(j) = \frac{MTBF(j)}{MTBF(j) + MTTR(j)}$$

where:

MTBF(j) = Mean Time Between Failure of the jth CI [upper test (2_o) per MIL-STD-781 C]

MTTR(j) = Mean Time To Repair the jth CI (see MTTR(CI))

1.8 Base Data

Those digital fields of reflectivity, mean radial velocity and spectrum width data in spherical (i.e.,rho,theta,phi) coordinates provided at the finest resolution available from the RDA to the RPG. These data resolutions are specified in Sections 3.7.1.2.2.1 and 3.7.1.2.2.2.

1.9 Base Products

Those products generated within the RPG functional area that present some representation of the base data. This representation may not necessarily be either in full resolution or depict the full area of coverage. Base products can be used by a user to generate a graphic display or perform further processing.

1.10 Catastrophic Failure

Any hardware or software condition that results in the inability to perform the minimally required RDA or associated RPG functions shown in Section 3.2.5 for at least one associated PUP.

1.11 Channel, Dual

The minimum equipment configuration needed to provide 100% redundancy (excluding the antenna assembly) in the capability to perform the single channel functions.

1.12 Channel, Single

The minimum equipment configuration needed to perform RDA key functions 1, 2 and 3 as defined in Table 3-6.

1.13 Collocated

The data signalling rate and interconnecting cable characteristics, using the EIA-RS-422-A transmission standard, determine the distance that NEXRAD equipment can be considered collocated. The RDA is collocated with a RPG when the two are separated by not greater than 80 meters of cable. The RPG is collocated with its Unit Control Position, PUPs, and/or RPG operational position (i.e. RPGOP) when they are separated by not greater than 1200 meters of cable.

1.14 Configuration Item (CI)

A CI is any individual item of equipment or combination of equipment items needed to perform some portion of the operational NEXRAD functional areas (i.e., RDA, RPG, PUP or communications). Furthermore, an independent CI is defined to have the following characteristics:

1. To fail without adversely affecting the performance capability of another CI.

2. To be able to have power turned on/off without an adverse effect on the performance capability of another CI.

3. The capability to have all external data, power, and/or control lines removed or restored without an adverse effect on the performance capability of another CI.

1.15 Critical Altitude

The height above radar elevation of a meteorological phenomenon or the expected height of the best radar signature of a meteorological phenomenon.

1.16 Derived Data Array Products

Those products generated automatically within the RPG functional area that present, in a non-displayable format, some combination of base products and derived products. These products are intended only for transmission to systems external to the NEXRAD Unit for further processing.

1.17 Derived Products

Those products generated within the RPG functional area that represent either some combination of base products or a base product that has been enhanced or otherwise changed by the use of manual or automated processing techniques. Derived products can be used for graphic display of weather radar information or for further processing by a user.

1.18 Dwell Time

The time interval over which velocity and reflectivity samples are taken to make the required estimates.

1.19 Expansion Capability

The capability to add CIs or LRUs to any NEXRAD Unit for the purpose of increasing its data acquisition, processing, and product distribution

capability. However, this addition shall not require:

1. New CIs or new LRUs within a CI that are not part of the logistics system. A new CI that is form, fit and functionally compatible with an existing CI is permitted provided it complies with items 3-5 of this definition.

2. Modification of an existing LRU or CI (the addition of cables between preexisting connectors on existing CIs is not considered a modification. Also, the addition of LRUs to a CI will not be considered a modification <u>if</u> such LRU additions are made by means of <u>pre-existing wired</u> connectors within a CI--e.g., the addition of a memory board to a CPU where one or more "slots" for such boards have been reserved).

3. The writing of new software (operational or maintenance).

4. The modification of any existing operational or maintenance software (changes made to the constants or parameter values are not considered modifications).

5. Addition or modification to any depot ATE capability.

<u>1.20 Facility</u>

The building(s) or enclosure(s) or that portion of the building(s) or enclosure(s) that houses some specific NEXRAD equipment.

<u>1.21 Failure</u>

Any hardware malfunction which degrades the performance of a CI below its specified value. Failures are considered either relevant or non-relevant as defined below:

a. Relevant failures shall include all malfunctions that are not specifically excluded as non-relevant. Each relevant failure occurrence shall be included in all calculations of reliability and availability.

b. A non-relevant failure is any failure which results from factors external to the CI or group of CIs under test. Non-relevant failures are not included in the determination of MTBF or MTTR. Non-relevant failures shall be limited to those failures which are due to the following causes:

   1. Accidents

   2. Operator errors

   3. Failure of another CI not under test, unless a pattern of failures is detected.

   4. Failure of test instrumentation or monitoring equipment, provided that it is not a component of the CI under test, that it does not cause the CI to be shut down or be interrupted, and that it does not cause an erroneous performance monitor report indicating the CI performance is below its specified

level.

5. Maintenance induced failures, unless attributable to equipment design.

6. Deviation from the mechanical, electrical, or environmental service specification, provided that adequate monitoring or recording substantiate the magnitude of the deviation.

7. Software failures.

1.22 Interface

The total software and hardware, excluding Data Communication Equipment, in the NEXRAD system necessary to communicate between two devices either within the NEXRAD Unit or from the NEXRAD Unit to another system.

1.23 Interface Connection

A capability within the system (e.g., backplane slot) which, without any other changes to the system, but provided with the software and hardware, will serve as an INTERFACE.

1.24 Line (Lowest) Replaceable Unit (LRU)

The minimum level of field replaceable equipment at any radar site or principal user site.

1.25 Local Facility

Those principal users located at one of the following types of location: WSFO, WSO, BWS, NOCD, TRACON, ATC Tower, or FSS.

1.26 Local Warning Site

An equipment site that performs the RDA, RPG, or PUP function for one of the principal users that has a unique need or data requirement. While data from such sites will be available for other principal users, the need for such data would not be a routine occurrence.

1.27 Maintenance Position

The location of unique NEXRAD equipment at the radar sites and/or user sites, from which maintenance actions are initiated and/or the results from such action can be observed.

1.28 Maximum Downtime (MDT)

The time interval between detection of a hardware failure in an RDA, RPG, or PUP equipment and the restoration of the appropriate functional area to a fully operational state for 90% of all CI failures, excluding supply time and administrative downtime.

1.29 Mean Time Between Visits (MTBV)

The mean time between visits to effect equipment repairs, excluding preventative maintenance and based on the concept that a visit is made only after redundant equipment failures have reduced the equipment at a radar site to its minimum operational configuration. This assumes

equipment is at a location unattended by maintenance personnel.

1.30 Mean Time To Repair (NEXRAD Unit)

The NEXRAD Unit mean time to repair (MTTR) shall be the statistical mean of the distribution of repair times for a NEXRAD Unit. The summation of active repair times during a given period of time divided by the total number of malfunctions during the same time interval.

1.31 Mean Time To Repair (MTTR(CI))

The statistical mean of the distribution of repair times for a CI. The summation of active repair times during a given period of time divided by the total number of malfunctions during the same time interval.

1.32 Median Gain

That level over an angular region at which the probability is 50% that the observed or measured gain at any position of the antenna will be less than or equal to that level.

1.33 National Facility

Those principal users located at one of the following locations: NMC, NSSFC, AFGWC, an HC, or the SCC.

1.34 Network Site

A site that performs the RDA and/or RPG functions on a 24-hour day, 7-day week basis. The products generated at a network site may not be actually utilized by the users on the same schedule; however, these sites have a distinct advantage to all principal users. That is, data from such a site would probably be used, on a routine basis, by all principal users.

1.35 NEXRAD System

The summation of all hardware, software, facilities, communications, logistics, training, and staff, together with operations, training, and maintenance procedures. The system includes both network sites and local warning sites (both CONUS and overseas).

1.36 NEXRAD Unit

The combination of one RDA, one RPG, all associated PUPS, and the necessary communications to fully implement the operational capability.

1.37 Off-The-Shelf

Either equipment or software that is in current production or part of the original manufacturer's commercial product line, and supported by the original manufacturer at the time of Limited Production Phase contract award.

1.38 Operational Facility

Any local, regional, or national facility.

1.39 Other User

Any user not identified as a principal user.

1.40 Port

An INTERFACE, plus all required Data Communications Equipment (cables, modems, etc.) needed to communicate with another device, either within or outside of the NEXRAD Unit.

1.41 Preview Area

An area on the alphanumeric or graphic displays for the viewing of operator entered data before physical modification of the display occurs.

1.42 Principal User

The National Weather Service, Air Weather Service, Naval Oceanography Command, or Federal Aviation Administration.

1.43 Principal User Site

Site of the equipment necessary to perform the principal user function. May be collocated with another site (i.e., a radar site).

1.44 Principal User External System

An existing or planned principal user automated digital communications network or other automated system with which one or more NEXRAD Units must interface. The known interfaces are: AFOS (NWS), CWP (FAA), AWDS (AWS), and NEDS (NOC).

1.45 Radar Site

Site of a specific NEXRAD antenna. May be collocated with another site (i.e., a principal user site).

1.46 Regional Facility

Those principal users located at one of the following locations: RFCs or ARTCCs (CWSUs).

1.47 Repair Time

The repair time for configuration items shall include the total time required to detect and isolate the failure, to replace the CI or the failed component, check out the repair, and return the item to full operational status (includes the time to restore the system, load adaptation data, restore data base, etc., to its condition prior to the failure).

1.48 Response Time

The time interval between completion of all needed manual actions and completion of the results of those actions. For example, if a user calls up one product for display, the response time is the time interval between making the last needed keystroke to call up the product and completion of the display of the resulting product (not just the start of display of a product).

1.49 Scan Period

The time required for a radar to complete a full 360 degree rotation in azimuth.

1.50 Site

The geographic location of some specific NEXRAD equipment.

1.51 Stability Test, 72-Hour

The stability test consists of continuous operation of the complete NEXRAD unit for a period of 72 hours. When a SYSTEM FAULT occurs, the test will be extended to ensure that the last 6 hours of the test are fault free.

1.52 Startup

The process of initializing an RDA, RPG, or PUP without regard to its previous state.

1.53 Support Facility

A facility that provides some form of support primarily for the NEXRAD System. This support may be in such areas as training, logistics, supply, or testing.

1.54 System Fault

A system fault is any malfunction which degrades NEXRAD unit performance below its specifications. Malfunctions arising from accidents, failures of test instrumentation or monitoring equipment shall not be considered a system fault.

1.55 Throughput Time

The time interval measured from the completion of the base data necessary for the generation of a product until the product is displayed at an associated PUP for base, derived and alphanumeric products, or received at an associated PUP for derived data array products. This time interval includes transmission time but excludes RPG queue time.

1.56 Unit Control Position

The location of unique NEXRAD equipment at a radar site or a user site from which normal system functions are initiated and system status reports are observed for a NEXRAD Unit. It is important to distinguish between system functions and operational functions. The former includes such actions as startup, restart, modifying local adaptation data, and monitoring communication queue lengths. The latter includes such actions as radar data interpretation, product generation or modification, and message preparation.

1.57 Volume Scan

The process of completing all elevation angle scans in a specific scanning sequence.

1.58 Volume Scan Time

The time interval between the start of one volume scan and the start of the next volume scan.

This Page Intentionally Left Blank

APPENDIX C

ALGORITHMS

The algorithms required for the Limited Production Phase NEXRAD System are listed below and are available as a separate document, Algorithm Report R400-AR301.

Algorithm Number	Algorithm Title	Required for Full Load
2	Mesocyclone Detection	x
4	Storm Tracking	x
5	Storm Centroids	x
6	Vert. Integrated Liquid (VIL)	x
7	Velocity Azim. Display (VAD)	x
8	Storm Position Forecast	x
9	Storm Structure	x
12	Hail	x
13	Echo Top	x
15	Severe Wx Probability	x
17	Precipitation Preprocessing	
18	Precipitation Rate	
19	Precipitation Accumulation	
20	Precipitation Adjustment	
21	Precipitation Products	
22	Storm Segments	x
23	Turbulence	x
26	Tornado Vortex Detection	x
33	Combined Shear	x

This Page Intentionally Left Blank

APPENDIX D

HYDROMETEOROLOGICAL PROCESSING FUNCTIONS

This appendix contains the Precipitation Detection Function and the Rain Gage Data Acquisition Function. The purpose of these functions is to collect data necessary for the precipitation processing described in the NEXRAD Algorithm Report (NAR), R400A-AR201. The NAR contains the descriptions for the PRECIPITATION PREPROCESSING, PRECIPITATION RATE, PRECIPITATION ACCUMULATION, PRECIPITATION ADJUSTMENT, and the PRECIPITATION PRODUCTS algorithms which utilize these data.

1. Precipitation Detection Function

1.1 Functional Description

The Precipitation Detection Function processes each full volume reflectivity scan in order to perform three basic functions. It detects whether precipitation has occurred within a 230-km radius of the NEXRAD radar and assigns a Precipitation Category appropriate to the situation. It maintains a Precipitation Status Message which indicates the operational mode, the equipment status, and the Precipitation Category. Finally, when precipitation is first detected, it transmits the Precipitation Status Message to an off-site computer so that the off-site system can initiate precipitation gage polling.

Precipitation is detected by comparing rain rates (using the same Z-R relationship as the RATE algorithm) to threshold values contained in the Precipitation Threshold Table. Whenever the area covered by detected precipitation at any tilt exceeds the threshold value in the Precipitation Threshold Table, it is assumed that precipitation exists and a Precipitation Category is assigned to the situation. When significant precipitation is occurring, Precipitation Category 1 is assigned to the weather situation. When precipitation amounts and areal extent are small, Precipitation Category 2 is assigned. A Precipitation Category remains in effect until a precipitation-free period of 1 hour occurs. Precipitation Category 1 takes precedence over Precipitation Category 2. When no precipitation is detected, the Precipitation Category is 0.

The Precipitation Threshold Table includes a Nominal Clutter Area for each row in the table. This allows the performance of the function to be tuned to the clutter characteristics of individual NEXRAD sites, including the performance of any clutter filtering algorithm(s) applied to the Reflectivity Factor data before this function processes them.

1.2 Processing Environment

It is assumed that several preprocessing steps will be applied to the reflectivity data before the data are input to the Precipitation Detection Function (for example, clutter suppression). Care must be taken to ensure that these steps are accomplished without loss of data quality or quantitative accuracy.

Some of the important preprocessing steps expected before data are input to this function include:

- Oxygen absorption correction [function of antenna elevation angle, range, height of antenna, and the assumed atmospheric state (probably the U.S. Standard Atmosphere)]
- Assignment of zero values to all reflectivities below a specified/determined noise threshold
- Signal processing in ground clutter areas as specified by a clutter map to suppress ground clutter, as well as anomalous propagation where possible, and other sources of interference, and
- Automatic calibration and quality control functions as desirable and feasible.

Furthermore, this function assumes that the reflectivity data being input have been converted to equivalent reflectivity factor data, hereafter referred to as simply Reflectivity Factor data, using the standard assumptions in the classical radar equation. In addition, it is assumed that correction has been applied to adjust for any known biases and losses resulting from the signal processing, alterations in equipment calibration, dry radome attenuation (eventually, wet radome effects may also be addressed in the preprocessing), and any other known losses.

The Precipitation Status Message produced by this function is required by the PREPROCESSING, RATE, ACCUMULATION, ADJUSTMENT, and PRODUCTS algorithms in the Precipitation Processing Subsystem and the Rain Gage Data Acquisition Function.

1.3 Acquisition

Reflectivity Bins are intrinsic system parameters acquired directly from the radar.

Reflectivity Factor data are acquired from the NEXRAD base data and should include clutter filtering and other quality control procedures to the extent possible.

Elevation Angles are system adaptation parameters which may change with changing scanning strategies.

The Multiplicative Z-R Coefficient and the Power Z-R Coefficient are system adaptation parameters which are also used by the RATE algorithm.

The Precipitation Threshold Table including the Tilt Domains, the Nominal Clutter Areas, the Precipitation Categories, the Precipitation Rate Thresholds, and the Precipitation Area Thresholds are site adaptation parameters based on empirical studies to assure that significant precipitation events are not missed. They will be "fine tuned" for each site.

The Precipitation Status Message is an output of this function maintained continuously for access by other algorithms (notably the Rain Gage Data Acquisition Function) as needed.

The radar ID is a site adaptation parameter.

The Time Stamp is acquired from the NEXRAD system clock in Greenwich Mean Time.

The Last Precipitation Detected Time is computed by the Precipitation Detection Function.

1.4 Computation

1.4.1 Notation

A_p = Area of precipitation detected at a particular Elevation Angle

Z = Reflectivity Factor value in dBZ at a particular range (r) and azimuth (az)

r	=	Range to nearest point of a particular Reflectivity Bin (km)
az	=	Azimuth of a particular Reflectivity Bin (degrees)
dr	=	Range resolution (bin size) of a particular Reflectivity Bin (km)
da	=	Azimuthal resolution (beam width) of a particular Reflectivity Bin (degrees)
T_p	=	Precipitation Rate Threshold in dBR for a particular row in the Precipitation Threshold Table
a	=	Multiplicative coefficient in the Z-R relationship
b	=	Power coefficient in the Z-R relationship
T_A	=	Precipitation Area Threshold in km^2 for a particular row in the Precipitation Threshold Table
T_N	=	Nominal Clutter Area in km^2 for a particular row in the Precipitation Threshold Table

1.4.2 Symbolic Formula

First Set $A_p = 0.0$.

For All Reflectivity Bins (i.e., all r and az)

If $\frac{Z(r,az)-10 \log a}{b} \geq T_p$

Then $A_p = A_p + \frac{Bda}{360} [(dr)^2 + 2r\ dr]$

This computation proceeds by processing each individual Elevation Angle within the Tilt Domain. The Precipitation Rate Threshold (T_p) in the computation is defined separately for each entry in the Precipitation Threshold Table presuming the Elevation Angle falls within the specified Tilt Domain for a table entry.

If $A_p \geq T_N + T_A$, assign the Precipitation Category indicated by the Precipitation Threshold Table. Precipitation Category 1 has priority over Precipitation Category 2.

Once Precipitation Category 1 is assigned, it remains in effect until the end of one precipitation-free hour. Once Precipitation Category 2 is assigned, it remains in effect until superseded by Precipitation Category 1 or until the end of one precipitation-free hour. The Precipitation Detection Function must be executed for each scan, regardless of the current Precipitation Category, in order to identify the existence of a precipitation-free hour, the initiation of precipitation, or a change in Precipitation Category.

1.5 Distribution

The Precipitation Status Message is transmitted to a Rain Gage Data Acquisition Computer (RGDAC) whenever precipitation is first detected. This allows the RGDAC to initiate hourly polling of rain gages. Once

gage polling is initiated, the RGDAC monitors the Precipitation Status Message each time it transmits new gage data to the Rain Gage Data Acquisition Function so that it knows when gage polling can be suspended.

The Precipitation Status Message is used in the PREPROCESSING, RATE, ACCUMULATION, ADJUSTMENT, and PRODUCTS algorithms in the Precipitation Processing Subsystem and the Rain Gage Data Acquisition Function.

1.6 Definitions

Reflectivity Bins - Grid cells for Reflectivity Factor data being input to this function. Data are required from all elevation angles specified by the Elevation Angles.

Elevation Angles - Elevation angles from which Reflectivity Factor data are being input to the Precipitation Detection Function. The elevations used will vary from site to site.

Reflectivity Factor - Equivalent reflectivity factor data (in dBZ)

Multiplicative Z-R Coefficient - Multiplicative coefficient in Z-R conversion.

Power Z-R Coefficient - Power coefficient in the Z-R conversion equation

Precipitation Threshold Table - Table of threshold values for precipitation detection. The table is composed of five columns: Tilt Domain, Precipitation Rate Threshold, Nominal Clutter Area, Precipitation Area Threshold, and the Precipitation Category. The table can have at most 50 rows and shall be adaptation data.

An example table follows:

Tilt Domain (degrees)	Precip. Rate Threshold (dBR)	Nominal Clutter Area (km^2)	Precip. Area Threshold (km^2)	Precip. Category
0 - 2	-3	20	20	2
0 - 4	1	15	10	1
2 - 4	-3	5	20	2

Consider a single volume scan at an elevation angle of 1°. If the area with Reflectivity Factor greater than or equal to an equivalent rain rate of -3 dBR exceeds 40 km^2, then Precipitation Category 2 has been reached.

Consider an elevation angle of 3° within the same volume scan. If the area with Reflectivity Factor greater than or equal to an equivalent rain rate of 1 dBR exceeds 25 km^2, then Precipitation Category 1 has been reached. Precipitation Category 2 would also be in

effect, but since Precipitation Category 1 is more significant, it would take precedence.

Tilt Domain	-	Range of Elevation Angles in degrees for which a row in the Precipitation Threshold Table applies.
Precipitation Rate Threshold	-	Minimum rainfall rate (in dBR) for a Reflectivity Bin to count toward the precipitation area for a particular row in the Precipitation Threshold Table.
Precipitation Area Threshold	-	Minimum areas (in km^2) covered by precipitation in the Precipitation Threshold Table.
Radar ID	-	Identifier for the NEXRAD radar site.
Precipitation Status Message	-	The Precipitation Status Message shall be generated each time the Precipitation Detection Function is run and shall be composed of the following items: radar ID, Time Stamp, Last Precipitation Detected Time, Precipitation Category currently in effect, number of gages in gage data base, and time of last update to gage data base.
Time Stamp	-	Time of occurrence of Precipitation Status Message in GMT.
Last Precipitation Detected Time	-	Time Stamp when precipitation was last detected. This shall be updated every full volume reflectivity scan which detects precipitation.
Nominal Clutter Area	-	Area (in km^2) normally produced by clutter with a Reflectivity Factor equivalent to the Precipitation Rate Threshold for a particular row in the Precipitation Threshold Table.
Precipitation Category	-	A coded value equal to 0, 1, or 2 for each row in the Precipitation Threshold Table giving the Precipitation Category which has been reached when the area of detected precipitation exceeds the sum of the Precipitation Area Threshold plus the Nominal Clutter Area. 0 = No precipitation detected 1 = Significant precipitation detected 2 = Light precipitation detected

1.7 Limitations

If any scan mode in the NEXRAD system fails to meet the requirements of Table D-1, there can be no assurance that the Precipitation Detection Function will detect precipitation; i.e., the NEXRAD site may completely fail to recognize precipitation occurrence. Since the Precipitation Processing Subsystem assumes that no precipitation is occurring if none has been detected by this function, precipitation accumulation estimates will not be meaningful if this function fails to detect precipitation.

In addition, if any scan mode does not meet the requirements of Table D-1, there can be no assurance that the category of precipitation (0, 1 or 2) as assigned by this function is representative of current conditions. Since the data requirements for the Precipitation Processing Subsystem during precipitation periods are more stringent than those specified in Table D-1 and because they are category dependent (see tables within the Precipitation Processing Subsystem, NEXRAD Algorithm Report), failure of the Precipitation Detection Function to properly assign the Precipitation Category could result in meaningless precipitation estimates.

TABLE D-1 MINIMAL SCAN MODE REQUIREMENTS NECESSARY FOR DETECTING PRECIPITATION

Scan Characteristic	Requirements
Range	230 km or more
Range Resolution	2 km or less
Azimuthal Coverage	360°
Azimuthal Resolution	2° or less
Tilts and Repetition	Lowest two tilts required by Precipitation Processing Subsystem (see PREPROCESSING algorithm) at least every 10 minutes. Four lowest tilts required by Precipitation Processing Subsystem at least every 30 minutes.

1.8 Future Developments

Due to the limitation cited above, the Precipitation Threshold Table will require fine tuning for best performance at each site using actual NEXRAD data.

2. Rain Gage Data Acquisition Function

2.1 Functional Description

The Rain Gage Data Acquisition Function serves one primary function--it maintains a data base of precipitation gage reports which are transmitted to the NEXRAD site by one or more external computer systems. These gage data are reported in a format known as the Standard Hydrometeorological Exchange Format (SHEF). The detailed description of the SHEF data format is contained in the three references cited below*. The gage data are used by the ADJUSTMENT algorithm of the Precipitation Processing Subsystem which computes hourly accumulations for each gage using the "raw" observations contained in the gage data base.

In addition to its primary function of parsing incoming SHEF data and posting it to the data base, this function responds to two other classes of incoming messages. The first class is a request for information which has two forms: 1) a request for status which this function responds to by transmitting the precipitation status to the external machine which made the request, and 2) a request for the list of gages in the gage data base which this function responds to by transmitting a table of Gage Identifiers, Gage Latitudes, and Gage Longitudes to the requesting machine.

The second class of incoming messages controls the gage data base itself. It consists of a number of input lines which add, delete, or change the characteristics of gages in the gage data base. The intent is to allow an external computer to maintain the data base of gages at each NEXRAD site without manual intervention at the NEXRAD site itself.

A summary of incoming message formats is contained in Table D-2. The SHEF format is a general format for transmission of all types of hydrometeorological data. This function only requires precipitation data in general, specifically only those PEDTSEP codes listed in Table D-3, and Duration Code Variable Specifiers listed in Table D-4.

The precipitation data managed by this data base are of two basic types: incremental and accumulation. Incremental reports give a precipitation accumulation (in inches or millimeters) for a specified duration. All of the PEDTSEP codes in Table D-3 which begin with "PP" are incremental reports. Incremental reports require that the duration be specified either within the PEDTSEP code itself (e.g., PPH for hourly) or by use of a Duration Code Variable Specifier as indicated in Table D-4 (e.g., DVN18/PPV for an 18-minute duration). Note that the SHEF format has a time resolution of 1 minute at best.

---

* SHEF:

1. "Standard Hydrologic Exchange Format (SHEF) Version I," NOAA/NWS, Northwest River Forecast Center, Portland, Oregon, Nov. 18, 1982.

2. "An Explanation of the Standard Hydrologic Exchange Format (SHEF) and Its Implementation in the Central Region," NOAA Technical Memorandum NWS CR-67, Geoffrey Bonnin and Robert S. Cox, Jr., Missouri Basin River Forecast Center, NWS, Kansas City, Missouri, April, 1983.

3. "The Posting of SHEF Data to the RFC Gateway Data Base," NOAA Technical Memorandum NWS CR-68, Geoffrey Bonnin, Missouri Basin River Forecast Center, NWS, Kansas City, Missouri, April, 1983.

TABLE D-2 SUMMARY OF INCOMING MESSAGE FORMATS

Message	Description
?S CR	Request for transmission of precipitation status. The output shall be composed of an indication of whether or not NEXRAD has detected precipitation within the last hour, current time (GMT), Operative/Inoperative, Mode and other flags.
?G CR	Request for transmission of gage data base. The output shall be composed of the Gage Identifier, Gage Latitude and Gage Longitude of each gage in the data base.
.. CR	Initiates list of gages to add, delete, or modify in gage data base.
Gage Identifier sp Gage Latitude sp Gage Longitude CR	Adds or modifies entry for Gage Identifier. Only valid between ".. CR " and ".END CR"
Gage Identifier sp DELETE CR	Deletes entry for Gage Identifier. Only valid between ".. CR " and ".END CR"
.END CR	Terminates list of gages to add, delete, or modify in gage data base. Also terminates B format SHEF data.
.Ax	Start at A format SHEF data. (x = sp or R)
.Bx	Start at B format SHEF data. (x = sp or R)
.Ex	Start at E format SHEF data. (x = sp or R)

All incoming messages which do not conform to SHEF or one of the formats described above shall be treated as comments and ignored.

Notes (1) CR indicates a carriage return.
(2) sp indicates one or more blanks required as a delimiter.

TABLE D-3 SUMMARY OF VALID PEDTSEP CODES

Code*	Description
PC PCI PCIRx PCIRxZ PCIRxZZ PCIZZ PCIZZZ PCIZZZZ PCZ PCZRx PCZRxZ PCZRxZZ PCZZZ PCZZZZ PCZZZZZ	All of these codes are logically equivalent -- meaning "instantaneous observed precipitation accumulator". All other codes beginning with PC are invalid.
PP PPZ PPZRx PPZRxZ PPZRxZ PPZRxZZ PPZZZ PPZZZZ PPZZZZZ	All of these codes are logically equivalent meaning "observed incremental precipitation". The increment duration is assumed 24 hours.
PPV PPVRx PPVRxZ PPVRxZZ PPVZZ PPVZZZ PPVZZZZ	All of these codes are logically equivalent meaning "observed incremental precipitation". The increment duration is specified by a preceding "DVx" code. If no "DVx" code has been specified, the data are presumed invalid.
PPa PPaRx PPaRxZ PPaRxZZ PPaZZ PPaZZZ PPaZZZZ	All of these codes are logically equivalent meaning "observed incremental precipitation." The increment duration is specified by "a" which must be one of the following:

"a" =				
	U	for one minute	C	for 15 minutes
	J	for 30 minutes	H	for one hour
	B	for two hours	T	for three hours
	Q	for six hours	A	for eight hours
	K	for twelve hours	L	for eighteen hours
	D	for twenty-four hours (daily)		

Notes:

*. "x" is used for "any character"

1. Other "a" codes for periods longer than 24 hours exist, but need not be posted to the NEXRAD data base.

2. Provision should be made to expand the valid list of "a" codes above to include up to 20 values.

TABLE D-4 VALID DURATION CODE VARIABLE SPECIFIERS

Code	Description
DVNnn	Increment duration = nn minutes
DVHhh	Increment duration = hh hours
DVZ	Increment duration returns to default value (24 hours for incremented precipitation).

Note: Other DV codes for intervals in days, weeks, etc., exist, but are not valid for NEXRAD precipitation data. If any DV code other than those above appear, then no PPVxxxx data can be processed until after a valid DV code is specified.

Accumulation reports give a total accumulation above a baseline at the gage at an instant in time. The baseline is normally reset when the gage is serviced (recharged with antifreeze and oil) or, for some types of gages, it "wraps around" from 99.99 inches to zero inches. The ADJUSTMENT algorithm, which computes hourly accumulations, is able to recognize these resets of the baseline. Neither the Rain Gage Data Acquisition Function nor the ADJUSTMENT algorithm require that all reports for a single gage will be of one type or other.

The data base maintained by this function must always save the last 50 reports from each gage. This will permit storage of up to 4 hours of 5-minute reports or a longer period from gages reporting less frequently. After an initial 50 reports have been received, the oldest report for a gage is discarded each time a new report from that gage is received. The only exception to this strategy is the handling of revised reports (SHEF formats AR, BR or ER). A revised report replaces an existing report for the same time if one exists.

The gage data base contains three types of data: the gage identification, gage reports, and a distance matrix. The data base must hold 50 gages as a minimum. As described above, the gage reports section must retain the most recent 50 reports for each gage. The three types of data are described below.

Each gage identification consists of the Gage Identifier (3-8 characters), the Gage Latitude (decimal degrees), the Gage Longitude (decimal degrees, positive for west of 0°, negative for east), the Gage Azimuth (decimal degrees), and the Gage Range (km). The Gage Azimuth and Gage Range are computed from the Gage Latitude and Gage Longitude by this function. If the computed range exceeds 230 km, the gage is not added to the data base.

The gage reports consist of the most recent 50 reports for each gage. Each report consists of the Gage Data Type Flag, the Gage Data Time Stamp of the data, the Gage Data Increment in minutes (for incremental reports only), and the Gage Data Value in mm (accurate to 1 mm). The Gage Data Time Stamp refers to the ending time of an incremental precipitation report or the sampling time of an accumulation report. This function converts all times to Greenwich Mean Time and all values to mm before posting. Negative values for the Gage Data Value must not be posted to the data base. A missing information flag shall be posted instead.

The Gage Distance Matrix contains the computed distance in km from each gage to every other gage. It must be recomputed whenever the gage identification section is changed by adding, deleting, or modifying the location of a gage. Since the distance between gages A and B is the same as the distance between B and A, the Gage Distance Matrix contains N(N-1)/2 distinct values where N is the number of gages.

The order of gages on the gage data base is not arbitrary. Since the ADJUSTMENT algorithm limits itself to 30 values for gages where rainfall actually occurs in an hour, this Rain Gage Data Acquisition Function must order the gages in such a way that they are scattered throughout the NEXRAD umbrella. This is accomplished by numbering the gages in such a way that the ADJUSTMENT algorithm can simply use the first 30 valid reports. The ordering is accomplished using the Gage Distance Matrix according to the following logic. Find the closest pair of gages and arbitrarily number one of them 1 and the other N (where N is the number of gages). Find the gage most distant from gage 1 and number it 2. Find the gage most distant from gage 2 (excluding gages 1 and N) and make it 3. Find the gage most distant from gage 3 (excluding gages 1, 2, and N) and make it 4. Repeat until all gages are ordered.

2.2 Processing Environment

This function is completely data-driven; it simply monitors the incoming line(s) and responds accordingly. Communications Class 5a describes the interface used to receive this data and initiate its collection.

A message containing 50 gage reports shall be posted to the data base within 3 minutes of receipt of the message.

Processing of other than accumulation related changes to the data base shall be deferred until no precipitation has been detected in the previous hour. At such a time, the changes shall be processed, a new Gage Distance Matrix created, and the gages reordered within a 15-minute processing time. During this time the processing of data reports may be deferred, if necessary, for parsing and posting until the update is completed.

The gage data base must be maintained in such a way that data are not lost in the event of a system shutdown. Likewise, any SHEF format data or gage identification data which have been received but not yet posted to the gage data base must be protected.

2.3 Acquisition

The NEXRAD system shall initiate collection of Gage Data Values by the Rain Gage Data Acquisition Computer(s) (RGDAC) by means of an automatically generated phone call to the RGDAC. Criteria for doing this are described by the Precipitation Detection Function. The RGDAC shall request the Precipitation Status Message from NEXRAD and terminate data acquisition based on this information.

The Gage Identifier, Gage Latitude, and Gage Longitude are contained in messages transmitted to NEXRAD by the RGDAC. These are retained by the gage data base.

The Gage Azimuth and Gage Range are computed by this function and retained in the gage data base.

The Gage Data Type Flag, Gage Data Time Stamp, Gage Data Increment, and

Gage Data Value are received by NEXRAD from the RGDAC. They shall be stored in the gage data base maintained by this function.

The Gage Distance Matrix is computed by this function for use by the ADJUSTMENT algorithm and for ordering the gages within the gage data base. All data received from the RGDAC will be in the SHEF format.

2.4 Data Summary

The entire gage data base including the Gage Identifier, Gage Latitude, Gage Longitude, Gage Range, Gage Azimuth, and Gage Distance Matrix; and all of the data reports which include Gage Data Type Flag, Gage Data Time Stamp, Gage Data Increment and Gage Data Value are continuously maintained by this function.

Precipitation Status Message, Gage Identifiers, Gage Latitudes, and Gage Longitudes may be transmitted by this function.

2.5 Definitions

Gage Identifier	=	A 3 to 8-character identifier for a gage.
Gage Latitude	=	Latitude in decimal degrees (positive for north) of a gage.
Gage Longitude	=	Longitude in decimal degrees (positive for west of 0°, negative for east) of a gage.
Gage Range	=	Computed range from NEXRAD antenna in km for a gage (accurate to 0.1 km).
Gage Azimuth	=	Azimuth in decimal degrees from NEXRAD to a gage (accurate to 0.1 degrees).
Gage Data Type Flag	=	Identifies reporting type-incremental or accumulation.
Gage Data Time Stamp	=	Time of occurrence of gage value in Greenwich Mean Time accurate to 1 minute. For incremental reports = time of end of increment.
Gage Data Increment	=	Increment length in minutes for incremental precipitation reports.
Gage Data Value	=	Reported value in mm. This is an incremental value for incremental reports or a total accumulation for accumulation reports. Accuracy is to within 1 mm.
Gage Distance Matrix	=	Matrix containing distances from each gage to every other gage in km (accurate to 0.1 km).
Precipitation Status Message	=	See Precipitation Detection Function

This Page Intentionally Left Blank

APPENDIX E
NEXRAD PRODUCTS

This Appendix lists the NEXRAD products required to be implemented during the Limited Production Phase. Table E-1 provides a summary for each product of: the area of coverage; product resolution; frequency of product generation for full load sizing; throughput time requirement; response time requirement for one-time product requests; and the frequency of product archival for full load sizing. The final form of any product is subject to Government approval.

1. Reflectivity

This product shall provide the reflectivity data displayable as an image.[1] Variations of the product shall be organized to provide various areas of coverage and display resolutions. The product shall be generated for any azimuth scan at a single elevation angle based on user requirements. Each scan shall be updated once per volume scan time.[2] Each product shall be available for both 8 and 16 reflectivity data levels. Each product shall include annotations for the product name, radar ID, time and date of scan, data level code, elevation angle, maximum data value (dBZ), radar position, radar elevation above MSL, and radar operational mode.

2. Mean Radial Velocity

This product shall provide the mean radial velocity data displayable as an image. Variations of the product shall be organized to provide various areas of coverage and display resolution. The product shall be generated for any azimuth scan at a single elevation angle based on user requirements. Each scan shall be updated once per volume scan time. Each product shall include both 8 and 16 mean radial velocity data levels. Each product shall include annotations for the product name, radar ID, time and date of scan, data level code, elevation angle, maximum data value detected (knots, positive and negative), radar position, radar elevation above MSL, and radar operational mode.

3. Spectrum Width

This product shall provide the radial velocity spectrum width data displayable as an image. Variations of the product shall be organized to provide various areas of coverage and display resolutions. The product shall be generated for any azimuth scan at a single elevation angle based on user requirements. Each scan shall be updated once per volume scan time. Each product shall be available for 8 spectrum width data levels. Each product shall include annotations for the product name, radar I.D., time and date of scan, data level code, elevation angle, maximum data value detected (knots), radar position, radar elevation above MSL, and radar operational mode.

4. Combined Shear

This product shall provide the combined (radial and azimuthal) shear of the mean radial velocity for a 230 km x 230 km area centered at the radar position. The shear information presented in this product shall be the output of the Combined Shear Algorithm. It shall be presented as

---

1 Defines the form of presentation on a graphic display; not necessarily the form of transmission.
2 Defined in Appendix B.

a displayable image of shear values containing 16 data levels. The capability to establish the product resolution shall be a UCP function. This product shall be produced for one elevation angle, as selected at the UCP, with the lowest elevation angle as the default. This product shall be updated once per volume scan time.

This product shall include annotations for product name, radar ID, date and time of elevation scan, elevation angle, data level code, position and value of maximum shear value, radar position, radar elevation above MSL, product resolution and radar operational mode. Upon user request, all site adaptable parameters identified as inputs to the algorithms used to generate data for this product shall be available at the alphanumeric display.

5. Combined Shear Contour

This product shall provide contours of the combined shear and shall be produced by contouring the output of the Combined Shear Algorithm used to produce the Combined Shear Product. The contouring interval(s) shall be site adaptable.

This product shall be displayable alone or as an overlay on reflectivity or velocity base products. This product shall be updated once per volume scan time.

This product shall contain annotations for the product name, radar ID, time and date of scan, position and value of the maximum shear value, elevation angle, radar position, radar elevation above MSL, radar operational mode, spatial resolution of contoured shear data and contouring interval(s). Upon user request, all site adaptable parameters identified as inputs to the algorithm used to generate data for this product shall be available at the alphanumeric display.

6. Composite Reflectivity

This product shall provide composite reflectivity data displayable as an image. For each geographical resolution element this product shall provide the highest reflectivity value above the resolution element available from any elevation angle scan of a volume scan. This product shall be updated once per volume scan time. The product shall be available for both 8 and 16 reflectivity data levels. The product shall include annotations for the product name, radar ID, time and date of scan, data level code, maximum data value (dBZ), radar position, radar elevation above MSL and radar operational mode. In addition, storm information generated by the various meteorological algorithms, e.g., the Storm Series or Tornado Vortex Signature Algorithms, shall be included as annotations or graphic overlays, or both, as the user selects. When selected, the algorithm generated information shall be provided for all identified storms. When these additional annotations or overlays are selected by the user, they shall be provided routinely until deselected. The information in these optional overlays and annotations shall be updated once per volume scan time.

7. Composite Reflectivity Contour

This product shall provide composite reflectivity data as line contoured areas displayable as an image. For each geographical resolution element this product shall provide the highest reflectivity value above the resolution element available from any elevation angle scan of a volume scan. This product is similar to the Composite Reflectivity Product

except the imagery data will be converted to a contoured format. This product shall be updated once per volume scan time. The number of contour intervals shall be adaptable. The product shall include annotations for the product name, radar ID, time and date of scan, maximum data value detected (dBZ), radar position, radar elevation above MSL, radar operational mode. In addition, storm information generated by the various meteorological algorithms, e.g., the Storm Series or Tornado Vortex Signature Algorithms, shall be included as annotations or graphic overlays, or both, as the user selects. When selected, the algorithm generated information shall be provided for all identified storms. When these additional annotations or overlays are selected by the user, they shall be provided routinely until deselected. The information in these optional overlays and annotations shall be updated once per volume scan time.

8. Echo Tops

This product shall provide the echo tops information displayed as an image. This product shall be produced from the output of the Echo Tops Algorithm. The product shall be updated once per volume scan time. The product shall be available for 16 altitude range data levels referenced to mean sea level. The product shall include annotations for product name, radar ID, time and date of scan, maximum data value detected (Height in feet, MSL), radar position, radar elevation above MSL, and radar operational mode.

9. Echo Tops Contour

This product shall provide the echo tops information as line contoured areas displayable as an image. The contouring interval shall be user selectable (in 1000 feet increments) with a minimum interval of 2000 feet and default to 5000 feet. The base contour value shall be site adaptable and default to 30,000 feet MSL. All contour values shall be annotated and displayed referenced to mean sea level. The product shall be updated once per volume scan time. The product shall include annotations for product name, radar ID, time and date of scan, maximum data value detected (Height in feet, MSL), radar position, radar elevation above MSL, and radar operational mode.

10. Severe Weather Analysis Display

This product shall provide, at the highest product resolution available, separate maps of reflectivity, mean radial velocity, spectrum width, and radial shear for 50 x 50 km areas. When produced because this product has been selected for generation due to the detection of an alert condition (See Section 3.7.2.5.9), the product shall be automatically generated for the elevation angle nearest the critical altitude* for the meteorological phenomenon causing the alert condition, and shall be centered at the coordinates of the meteorological phenomenon causing the alert condition. This product shall also be generated upon user request for a user-specified elevation angle and geographic center point.

The capability shall exist to modify the mean radial velocity map by removing the storm motion of an operator selected storm from the velocity data. The modified map shall be centered on the same geographic location as the original map. The method of removal shall be as described in product 16, Storm Relative Mean Radial Velocity.

---

* Defined in Appendix B.

The product shall contain 16 data levels for each data type displayed except spectrum width which shall contain 8 data levels. The product shall include annotations for product name, radar ID, radar position, time and date of scan, elevation angle, Height (AGL) of the phenomenon center-point, maximum data values detected, mesocyclone, TVS, and hail.

11. Severe Weather Probability

This product shall provide an alphanumeric set of severe weather probability values displayable in a graphic map format. These severe weather probability (SWP) values shall be produced using the Severe Weather Probability Algorithm. This product shall be updated each time the VIL (Vertically Integrated Liquid) product is updated. The product shall be produced in a form that can be used to generate an alphanumeric SWP value for overlaying the VIL image product or which can be displayed independently with the SWP value assigned to the VIL box corresponding to the center of an individual cell. Each product shall include annotations for the product name, radar ID, time and date of volume scan used to produce the product, data level code, maximum data value detected (percent), radar position, radar elevation above MSL, and radar operational mode.

12. Velocity Azimuth Display Winds

This product shall provide the Velocity Azimuth Display Algorithm derived wind speed and direction. Two versions of the product shall be produced. For the first version, the wind speed and direction at up to 30 altitudes shall be computed and displayed as wind barbs on a height scale.

The specific altitude levels at which VAD winds are computed and reported shall be site adaptable in one thousand feet increments. The specific altitudes at which winds are requested shall be used to derive the specific slant range and elevation angle for the VAD algorithm analysis. The use of look-up tables relating a specific slant range and elevation angle to a specific wind reporting altitude for computational efficiency is permitted. To facilitate this, off-line processing may be used to generate new look-up tables whenever adaptation parameters are changed or new scanning sequences are invoked. The specific method of computing slant range and elevation angle are subject to Government approval.

Wind speed and direction shall be reported to the highest altitude level at which sufficient signal is available for processing by the VAD algorithm. The current and up to 10 previous height plots (user selectable) shall be displayed simultaneously on a time versus height scale. Altitude levels shall be shown referenced to mean sea level. This version of the product shall include annotations for the product name, radar ID, radar position, radar elevation above MSL, time and date of volume scan, and maximum wind speed and associated direction of most current plot. Upon user request, all site adaptable parameters identified as inputs to the algorithm used to generate data for this product shall be available at the alphanumeric display.

A second version of the VAD winds product shall be produced upon user request. This version shall present the VAD wind analysis for a specific altitude. The data displayed shall consist of the Doppler velocity data used to compute the VAD wind and the best fit function used to determine the horizontal wind speed and direction. The data shall be presented to the user as a graphical plot of the actual Doppler

velocity and the best fit function on an orthogonal axis of speed versus azimuth. The vertical axis presented shall be speed, scaled as necessary to allow all data to be displayed. The Nyquist velocity for the specific scan shall be graphically annotated on the display if the range of the scaled vertical axis is sufficient. The horizontal axis shall be azimuth, scaled from 0-360 degrees with true north as 0/360 degrees. This product shall be available for any wind value included in the most recent time-height cross-section version of the VAD Winds Product. This version of the product shall include annotations for the product name, radar ID, radar position, radar elevation above MSL, time and date of volume scan, slant range, elevation angle, wind speed and direction, computed altitude of winds, RMS error, and best fit function in the form

$A_1 + V \sin(2 + *)$ (See Algorithm Report.)

13. Combined Moment

This product shall provide the reflectivity, mean radial velocity and spectrum width data combined into a single product displayable as an image. The product shall be generated on request for any user defined elevation scan and product center point coordinates. Each product shall include annotations for product name, radar ID, time and date of scan, elevation angle, product center point coordinates, maximum data values, radar position, radar elevation above MSL, and radar operational mode.

14. Cross-Section

This product shall provide a vertical cross section of reflectivity, mean radial velocity data or spectrum width displayable as an image for a user selected vector. This vector shall be defined by the operator using two end-points, up to 230 km apart, and at any orientation and location within 230 km of the radar. This product shall be produced by mapping the nearest value in range along a radial, to a point in the plane of the vertical cross section defined by the intersection of the plane and the radial. The displayable version of the product shall be produced by linearly interpolating between the mapped values, both horizontally and vertically as necessary. The product shall be generated only on request. The product shall be available for both 8 and 16 data levels defining the intensity range and velocity range data levels, and 8 data levels only for spectrum width. The product shall include annotations for the product name, radar ID, time and date of volume scan, maximum data value and location(s), radar position, radar elevation above MSL, and the radar operational mode. The location of the vector center and the end points (az/ran) shall also be indicated.

15. Weak Echo Region

This product shall provide the weak echo region displayable as an image for a user selectable storm. Information defining the weak echo region shall be derived from the Storm Structure Algorithm. The product shall be generated only on request. The product shall include annotations for the product name, radar ID, time and date of scan, radar position, maximum data value (dBZ), radar position, radar elevation above MSL, and radar operational mode.

The WER product shall be displayed as a set of up to eight stacked planes in perspective view. The (x,y) coordinate of the storm as output by the Storm Structure Algorithm shall be used to establish the center-point of all planes. Reflectivity data from a single elevation

angle shall be displayed on a single plane, with the lowest elevation angle on the lowest plane, as viewed perspectively. Elevation angles shall be shown in ascending order. Eight planes shall be included in the product. The specific elevation angle assigned to each plane shall be user selectable from those available in the current scan strategy at the time the product is requested, and default to the lowest 8 elevation angles. The areal extent of a single plane shall wholly contain the delimiting (e.g., 30dBz) contour (as used to determine segments in the Storm Segment Algorithm) of the storm with at least a 50% margin of excess to a maximum of 50 x 50 km such that no plane obscures any other plane.

16. Storm Relative Mean Radial Velocity

This product shall provide mean radial velocity for: (a) a small geographic area centered upon or near an identified storm of interest with the storm motion removed, or (b) the entire area of radar coverage (to 230km) with the average storm motion removed. This product shall be produced upon request for any azimuth scan at any elevation angle. The product shall be generated as a displayable image by removing the radial (velocity component away from the radar antenna) component of storm motion from the mean radial velocity values. The radial component of storm motion shall be computed using the storm motion value computed for the identified storm by the Storm Tracking Algorithm, the vector average of all currently identified storms or a value input by the user. The value of storm motion used to adjust the mean radial velocity values shall be user selectable at the time of product request, or default to the vector average of all currently identified storms if not selected. Each product shall contain 16 data levels for storm-adjusted mean radial velocity. Each product shall include annotations for the product name, radar ID, time and date of scan, elevation angle, storm motion, coordinates of product center, radar position, radar elevation above MSL, and radar operational mode.

17. Vertically Integrated Liquid (VIL)

This product shall provide vertically integrated liquid values displayed as an image. The output of the VIL Algorithm shall be used to produce this product. The product shall be updated once per volume scan time. The product shall be available for 16 data levels. Each product shall include annotations for product name, radar ID, time and date of volume scan, maximum data value (VIL value), radar position, radar elevation above MSL, and the radar operational mode.

18. Storm Tracking Information

This product shall provide information concerning the past, present and future positions of each identified storm. This product shall be generated from the output of the Storm Tracking and Storm Position Forecast Algorithms. It shall be produced in a tabular format of alphanumeric values, as a stand alone graphic product, and in a format for generating graphic overlays to other products. This product shall be updated once per volume scan time. Each product shall include annotations for product name, radar ID, date and time of volume scan, maximum data value per storm, radar position, radar elevation above MSL, radar operational mode, and total number of identified storms for which tracking is available. Upon user request, all site adaptable parameters identified as inputs to the algorithm(s) used to generate data for this product shall be available at the alphanumeric display.

19. Hail Index

This product shall provide, for each storm identified by the storm series algorithms, an indication that the storm will or will not produce hail. The hail indication values that are shown for each storm shall be generated by the Hail Algorithm. This product shall be produced in a format that can be used to generate an alphanumeric tabular type of display, an alphanumeric annotation to other products, or a graphic overlay. This product shall be updated concurrently with the storm structure product. This product shall include annotations for the product name, radar ID, time and date of last volume scan used to generate updated values, radar position, radar elevation above MSL, and radar operational mode. Upon user request, all site adaptable parameters identified as inputs to the algorithm(s) used to generate data for this product shall be available at the alphanumeric display.

20. Mesocyclone

This product shall provide information about identified shear and mesocyclone features. This product shall be generated from the output of the Mesocyclone Detection Algorithm. This product shall be generated in a format that can be used to generate an alphanumeric tabular display for any identified feature or all simultaneously, a graphic display or a graphic overlay to other products. This product shall be updated once per volume scan time. If on a particular volume scan there is no output from the Mesocyclone Detection Algorithm (i.e., no features of any type are identified), a version of the product shall be produced that exhibits the negative condition. This product shall include annotations for the product name, radar ID, date and time of volume scan, radar position, radar elevation above MSL, and radar operational mode. Upon user request, all site adaptable parameters identified as inputs to the algorithm(s) used to generate data for this product shall be available at the alphanumeric display.

21. Tornado Vortex Signature

This product shall provide information regarding the existence and location of an identified Tornado Vortex Signature (TVS). This product shall be produced from the output of the TVS Algorithm. This product shall produce an alphanumeric tabular display of the algorithm output data for each identified mesocyclone and generate a graphic overlay of the TVS signature information when such is identified. This product shall be updated once per volume scan time. This product shall include annotations for the product name, radar ID, time and date of volume scan, radar position, radar elevation above MSL, and radar operational mode. Upon user request, all site adaptable parameters identified as inputs to the algorithm(s) used to generate data for this product shall be available at the alphanumeric display.

22. Storm Structure

This product shall provide, for each identified storm, information regarding the structure of the storm. This product shall be produced from and contain the values that are output by the Storm Structure Algorithm. This product shall be updated once per volume scan time. This product shall be produced in a tabular alphanumeric format and shall include annotations for the product name, radar ID, time and date of volume scan used to generate the latest set of values, radar position, radar elevation above MSL, and radar operational mode. Upon user request, all site adaptable parameters identified as inputs to the

algorithm(s) used to generate data for this product shall be available at the alphanumeric display.

23. Layer Composite Reflectivity

Each product shall contain annotations for product name, radar ID, date and time of volume scan, maximum data value detected, radar position, radar elevation above MSL, and radar operational mode. All layer products shall be on a geographically based cartesian grid, centered on the radar. Up to three layers shall be available for layer products at each site; the depth of each layer shall be controlled via adaptation data. The default values are listed in Table E-1. No layer will be less than 6,000 ft thick. Each layer product shall be updated on a volume scan basis.

Eight data levels shall be available for each product, including one for data below the minimum threshold and one for no data. The default values for the reflectivity shall be the standard NWS DVIP levels, as defined in FMH #7. The data level thresholds shall be controlled via adaptation data.

Before layering, the reflectivity data shall be thresholded with respect to mean noise level and shall also be filtered to remove spurious isolated data caused by point targets. It shall be possible to select either a maximum value or the average reflectivity for the grid box, but not both simultaneously. The range of coverage for each product shall be controlled via adaptation data; the default is a 460 km X 460 km square centered on the radar.

A three-dimension (3-D) grid box shall be defined as the vertical projection of the geographically based cartesian grid square through the appropriate layer. All radar resolution volumes whose centers are contained in a given 3-D grid box shall be included in the computation for the 3-D grid box. All 3-D boxes whose centers fall in a radar resolution volume shall include the radar resolution volume in the computation for that 3-D grid box. A center that falls on a boundary shall be considered to fall on both/all sides of the boundary. The product resolution shall be 4 km x 4 km.

The use of look-up tables for computational efficiency is permitted. To facilitate this, off-line processing may be used to generate new look-up tables whenever adaptation parameters are changed or new scanning sequences are added to the system.

24. Layer Composite Turbulence

These products shall provide derived turbulence intensity values composited for three site-adaptable layers with the default values as listed in Table E-1. Each product shall be produced using the outputs of the Turbulence Algorithm. Eight data levels shall be available for each product, including one for data below the minimum threshold and one for no data. Each of the three layers shall be updated once per volume scan time. Each product shall contain annotations for product name, radar ID, date and time of volume scan, maximum data value detected, radar position, radar elevation above MSL, and radar operational mode.

A three-dimension (3-D) grid box shall be defined as the vertical projection of the geographically based cartesian grid square through the appropriate layer. All radar resolution volumes whose centers are contained in a given 3-D grid box shall be included in the computation

for the 3-D grid box. All 3-D boxes whose center falls in a radar resolution volume shall include the radar resolution volume in the computation for that 3-D grid box. It shall be possible to select either a maximum value or the average value for the grid box, but not both simultaneously. The product resolution shall be 4 km X 4 km. The product size shall be a 300 km X 300 km square centered on the radar.

The appropriate use of look-up tables for computational efficiency is permitted. To facilitate this, off-line processing may be used to generate new look-up tables whenever adaptation parameters are changed or new scanning sequences are added to the system.

25. User Alert Message

This product shall provide a brief message defining an area of indicated severe weather. The message shall contain the location, type and severity of the weather event, and storm speed and direction of movement. The product shall be updated once per volume scan. The product shall include annotations for the product name, radar ID, time and date of scan, radar position, radar elevation above MSL, and severe weather information as appropriate.

26. Radar Coded Message

The Radar Coded Message (RCM) shall be produced in 2 stages: a pre-edit stage and a post-edit stage. The pre-edit stage shall be automatically produced and transmitted to a single associated PUP/RPGOP, designated by the UCP, and made available for editing. After editing, or editing opportunity as described below, the post-edit stage shall be produced, in accordance with Appendix K and made available from the RPG. The capability shall be provided to prohibit the distribution of the unedited post-edit stage RCM to Class IV users. The RCM shall be produced in 3 parts: Part A, Reflectivity; Part B, VAD Winds; and Part C, Remarks. The specific data content of each part is described below.

The pre-edit stage of Part A shall contain an intermediate graphic product and a tabular listing of alphanumerics. The intermediate graphic product shall contain reflectivity data for the 1/16 LFM grid over the radar area of coverage out to 460 km. The reflectivity intensity value for each grid box shall be determined by assigning the maximum value of all Composite Reflectivity boxes whose centers are contained within the 1/16 LFM grid square.

The intermediate graphic product shall be based on the 16 level, 4 km x 4 km Composite Reflectivity Product but contain only 9 data categories: 6 for data within 230 km, 1 for missing or below threshold data within 230 km, and 2 for data beyond 230 km. The selection of which composite reflectivity levels map into which of the 6 radar coded message categories shall be adaptable at the UCP. For data beyond 230 km, a separate adaptable threshold shall be provided for which:

a) all data above that threshold will be labeled as category 8, and

b) all data below that threshold will be labeled as category 9.

The intermediate graphic product shall be presented to the user at the PUP for graphic editing by deleting data or changing data to another data level within areas outlined by using the cursor control device. Each area shall have a variable-sized polygon of up to 20 sides. Other

normal PUP functions such as magnify and cursor linking shall be available during the edit procedure. A readout of the location of the cursor control device shall be provided to indicate the 3-letter designation of the 1/16 LFM grid box. This readout shall be displayed continuously while using this product and be updated at least once per second. The alphanumeric list shall contain the height (MSL) and position of the maximum echo top. The height, and the position where provided, shall be derived from the Echo Tops Product. The alphanumeric list shall also include the location of the largest mass-ranked centroids within 230 km of the radar. The number of centroids reported shall be UCP adaptable from 1-20, with default value of 12. Locations of these centroids shall be provided graphically by overlaying their respective storm identifiers on the intermediate graphic product. As available from the output of the Storm Position Forecast Algorithm, the forecast centroid speed and direction shall also be listed. The capability to manually edit these alphanumerics shall be provided. When the user deletes an area during a graphic editing session, the centroids shall be automatically deleted. After editing, the graphics and alphanumerics shall be formatted into part A of the radar coded message.

Part B of the radar coded message shall contain a single profile of the horizontal wind information derived from the output of the VAD algorithm. The capability to edit these alphanumerics shall be provided.

Part C of this product shall contain remarks in an alphanumeric format. This information shall give the position of each detected mesocyclone or couplet (as derived from the Mesocyclone Detection Algorithm) and each detected TVS (as provided by the TVS Algorithm). In addition, for each centroid included in part A, part C shall contain the Hail Index (as provided by the Hail Algorithm). The capability for entry of formatted remarks shall be designed to minimize format errors and the manual entry and editing time. (The use of input assists such as on-screen menus, templates with defaults, and the use of the cursor control device for the LFM grid location input should be considered.) Unformatted remarks and the editors initials shall be input through the keyboard. The capability to edit, add to, or restore the pre-edit alphanumeric text of part C shall be provided.

After the editing opportunity, parts A, B, and C shall be combined into a single message ready for transmission. The message code shall be as specified in Appendix K.

The pre-edit version of this product shall be produced automatically up to 2 times per hour based on time of day specified at the UCP in minutes after the hour. This product shall also be produced upon one-time request from the designated RPGOP/PUP using data from the last completed volume scan. For a continually scanning radar, the product shall be produced from the last completed volume scan prior to the scheduled time. Once alerted that the pre-edit version of the product is available, if the operator does not begin the editing procedure within an elapsed time, T (site adaptable, default of 120 seconds), the unedited version of the product shall be produced automatically within 20 seconds. If the operator does respond, the edited post-edit version of the product shall be produced within 20 seconds of the time the operator manually terminates the edit procedure. When the product is complete, it shall be sent back to its RPG for distribution.

27. Free Text Message

This product shall provide a capability for defining an alphanumeric message for one-time transmission to specific NEXRAD Unit interface(s). The product shall be generated by an operator through the UCP or RPGOP for transmission to the RPG's users or by the PUP operator for transmission to the PUP's users. Messages may be designated to be transmitted to a specific or several NEXRAD Unit interfaces. Product shall include radar ID, date, and time that the message was completed.

28. Surface Rainfall Accumulation

These products shall provide 1-hour and 3-hour rainfall accumulation maps displayed as an image. The 1-hour map shall be updated every volume scan time and the 3-hour map shall be updated once per hour. These products shall be available for 16 accumulated precipitation data levels. Each product shall include annotations for the product name, radar ID, date and ending time (TSavgcur* or clock hour as appropriate) of the rainfall rate integration, maximum data value, radar position, radar elevation above MSL, radar operational mode, the bias in the radar estimate of the precipitation rate (Bcur*), and the error variance of the bias estimate (MSEcur*).

29. Storm Total Rainfall Accumulation

This product shall provide a rainfall accumulation map displayed as an image. The product format and content shall be the same as the Surface Rainfall Accumulation Product except the time period shall be a variable and shall equal the period of continuous rainfall in the radar area of coverage. This product shall be updated every volume scan time. This product shall include annotations for product name, radar ID, maximum data value detected, radar position, times and dates of the beginning and end (TSavgcur* or clock hour as appropriate) of the rainfall rate integration, radar position, radar elevation above MSL, radar operational mode, the bias in the radar estimate of the precipitation rate (Bcur*), and the error variance of the bias estimate (MSEcur*).

30. Hourly Digital Precipitation Array

This product shall provide hourly running total digital radar-rainfall estimates in an array format (not display oriented) to support processing performed external to the NEXRAD System. This product shall be updated once per volume scan time. The product shall be available for 100 data levels for each array element. Each product shall include annotations for product name, radar ID, date and ending time (TSavgcur* or clock hour as appropriate) of the rainfall rate integration, radar position, the radar operational mode, the maximum data value, the bias in the radar estimate of the precipitation rate (Bcur*), and the error variance of the bias estimate (MSEcur*).

31. Supplemental Precipitation Data

This product shall provide selected supplemental data generated or collected during the operation of the precipitation processing subsystem algorithms in a compacted array and/or an alphanumeric message format (not a display compatible format). This product shall provide up to 10 different preselected sets of supplemental data using a single request code.

---

* See Algorithm Report

This product shall be updated once per volume scan time. This product shall include annotations for product name, radar ID, date and time of volume scan, maximum data value, radar position, radar elevation above MSL, and radar operational mode.

TABLE E-1 NEXRAD PRODUCTS

PRODUCTS	COVERAGE AREA (km x km or km RADIUS)	PRODUCT RESOLUTION (km X km)	THROUGHPUT TIME (sec)	RESPONSE TIME ONE TIME REQUEST (sec)	FULL-LOAD SIZING GENERATION FREQ (PER VOL. SCAN)	FULL-LOAD SIZING ARCHIVAL (PER VOL. SCAN FOR RPG & PUP)
1. REFLECTIVITY	0-230	1 x 1	30	90	9 elev. angles	Lowest elev. angle
	0-460	2 x 2	30	90	Lowest 2 elev. angles	None
	0-460	4 x 4	30	90	None	None
2. VELOCITY	0-60	O.25 x 0.25	30	90	Lowest 4 elev. angles	None
	0-115	0.5 x 0.5	30	90	Lowest 4 elev. angles	Lowest elev. angle
	0-230	1 x 1	30	90	Lowest 2 elev.angles	None
3. SPECTRUM WIDTH	0-60	0.25 x 0.25	30	90	Lowest 2 elev. angles	None
	0-115	0.5 x 0.5	30	90	None	None
	0-230	1 x 1	30	90	Lowest 1 elev. angle	None
4. COMBINED SHEAR	230 x 230	1 x 1, Note 2	60	180	1	None
5. COMBINED SHEAR CONTOUR	230 x 230	Note 2, *	60	180	None	None
6. COMPOSITE REFLECTIVITY	0-230	1 x 1	30	90	1	None
	0-460	4 x 4	30	90	1	1
7. COMPOSITE REFLECTIVITY CONTOUR	0-230	1 x 1*	30	90	None	None
	0-460	4 x 4*	30	90	1	None
8. ECHO TOPS	0-230	4 x 4	60	90	1	None
9. ECHO TOPS CONTOUR	0-230	4 x 4 *	60	90	1	None
10. SEVERE WEATHER ANALYSIS DISPLAY	50 x 50	**	30	90	1	As available
11. SEVERE WEATHER PROBABILITY	0-230	4 x 4	30	90	None	None
12. VELOCITY AZIMUTH DISPLAY WINDS						
Wind Profile	N/A	1000 ft alt.	60	180	None	None
VAD	N/A	1000 ft alt.	60	180	None	None
13. COMBINED MOMENT	25 x 25	Note 1	60	90	None	None
14. CROSS SECTION	230km x 70k ft alt.	1km x 0.5km	N/A	180	None	None
15. WEAK ECHO REGION	50 x 50	1 x 1	30	90	1	None
16. STORM RELATIVE MEAN RADIAL VELOCITY						
Region	50 x 50	0.5 x 0.5	30	90	1	None
Map	0-230	1 x 1	30	90	Lowest elev. angle	None
17. VERTICALLY INTEGRATED LIQUID	0-230	4 x 4	30	90	None	None
18. STORM TRACKING INFORMATION	0-345	N/A	30	90	As available	None
19. HAIL INDEX	0-230	N/A	30	90	As available	None
20. MESOCYCLONE	0-230	N/A	30	90	As available	None
21. TORNADO VORTEX SIGNATURE	0-230	N/A	30	90	As available	None
22. STORM STRUCTURE	0-345	N/A	30	90	As available	None
23. LAYER COMPOSITE REFLECTIVITY						
33,000' MSL to 60,000' MSL	460 x 460	4 x 4	30	90	1	None
24,000' MSL to 33,000' MSL	460 x 460	4 x 4	30	90	1	None
Surface to 24,000' MSL	460x 460	4 x 4	30	90	1	None
24. LAYER COMPOSITE TURBULENCE						
33,000' MSL to 60,000' MSL	300 x 300	4 x 4	30	90	1	None
24,000' MSL to 33,000' MSL	300 x 300	4 x 4	30	90	1	None
Surface to 24,000' MSL	300 x 300	4 x 4	30	90	1	None

TABLE E-1
NEXRAD PRODUCTS
(continued)

PRODUCTS	COVERAGE AREA (km x km or km RADIUS)	PRODUCT RESOLUTION (km X km)	THROUGHPUT TIME (sec)	RESPONSE TIME ONE TIME REQUEST (sec)	FULL-LOAD SIZING GENERATION FREQ (PER VOL. SCAN)	FULL-LOAD SIZING ARCHIVAL (PER VOL. SCAN FOR RPG & PUP)
25. USER ALERT MESSAGE	N/A	N/A	20	N/A	As available	As available
26. RADAR CODED MESSAGE	N/A	N/A	20	N/A	None	None
27. FREE TEXT MESSAGE	N/A	N/A	20	N/A	None	None
28. SURFACE RAINFALL ACCUMULATION						
One Hour	0-230	2 x 2	30	90	None	None
Three Hour	0-230	2 x 2	30	90	None	None
29. STORM TOTAL RAINFALL ACCUMULATION	0-230	2 x 2	30	90	None	None
30. HOURLY DIGITAL PRECIPITATION ARRAY	0-230	1/40 LFM	30	90	None	None
31. SUPPLEMENTAL PRECIPITATION DATA	N/A	N/A	30	90	None	None

Notes:

N/A = Non Applicable

* = Resolution of Data used to derive contours

** = See Product Description

1 = Same as Base Data

2 = Product resolution is an adaptable parameter entered at the UCP

APPENDIX F

ELECTROMAGNETIC ENVIRONMENT

As an example of an electromagnetic environment that NEXRAD will encounter, a description of the equipment and signal environment in the NEXRAD frequency bands for a proposed site in the Los Angeles area is provided here. Table F-1 lists the equipment in the 2700 to 3100 MHz band in the area that could contribute to the NEXRAD signal environment at a site near Whittier in the Los Angeles area. The information is taken from the Government Master File and augmented from other available sources, including technical manuals and area frequency coordinator contacts. Equipments in the area that would not contribute to the signal environment for this site because of operating limitations or terrain shielding were not included in the table. The emission and susceptibility characteristics of the radars are assumed to be in accord with the Radar Spectrum Engineering Criteria[1] (RSEC) - Criteria "C," (Subsection 5.3.2).

A number of the listings have two "Assigned Frequencies" shown. For the diplexed ASR-8, both channels can operate simultaneously and the frequencies are shown as e.g., "2755 & 2825." For the radars with an alternate or standby channel, they are shown e.g., "2710 or 2720" where only one channel will be radiating at a time.

The letters in the first column under "ID" cross-reference Table F-1 to the measured signal density information shown in Figures F-1 and F-2. The measurements[2] of signal density were made at the Whittier site in the 2700-3100 MHz band and show the maximum, minimum and average peak power densities observed during 72 hours of measurements in the five day period beginning at 2 p.m. on 9 July 1981. Note that some variations exist between "assigned" and "observed" frequencies, but in most cases there is agreement within a few MHz. Also, note that the receiver saturation level of -40 dBm shown on the Figure limits the amplitude of many of the signals shown.

---

[1] Manual of Regulations and Procedures for Federal Radio Frequency Management, NTIA/DOC, Washington, D.C., January 1980.

[2] Matheson, R.J., Smilley, J.D., Lawrence, V.S., "S"-Band Radar Pulse Densities in the Los Angeles Area, August 1981, NTIA/ITS/DOC, Boulder, Colorado.

TABLE F-1 2700 TO 3100 MHz ENVIRONMENT LIST FOR WHITTIER[a], LOS ANGELES, CA

ID	Site	Assigned Frequency(MHz)	Equipment Nomenclat	[c]P_T (kw)/ [d]G (dbi)	[b]PRF (Hz)/ t, t_r Usec	[f]RPM	Latitude/ Longitude	Site El./ Ant. Ht. (ft)
B,U	L.A. Int. (LAX)	2705 and 2055	ASR-7	450 34	710-1200 0.833,.08	12.5	33 55 57N 118 24 23 W	115 46
C,D	Miramar NAS	2710 or 2720	ASR-5	400 34	700 0.833,.08	12.5	32 52 29N 117 08 23W	451 74
E	El Toro	2730 or 2740	ASR-5	400 34	700 0.833,.08	12.5	33 39 46N 117 42 43W	404 44
G	L.A. Int. (LAX)	2750 or 2760	ASR-4	450 34	810 0.833,.08	12.5	33 57 13N 118 24 25W	116 26
Q	North Island	2755 & 2825	ASR-8	1250 34	830-1200 0.6,.08	12.5	32 42 09N 117 12 57W	18 26
H	Santa Barbara	2760 or 2770	ASR-4	450 34	1155 0.833,.08	12.5	34 25 26N 119 50 29W	10 26
	March AFB	2765 & 2877	AN/GPN-12	500	710-1200 .833,.08	15	33 53 11N 117 14 30W	1507 20
I,T	Lng Beach	2775 & 2845	ASR-8	1000 34	830-1200 0.6,.08	12.5	33 49 08N 118 08 16W	31 26
K,L	Burbank	2785 or 2795	ASR-6	400 34	1125 0.833,.08	12.5	34 12 15N 118 21 14W	743 70
	Norton AFB	2795	AN/MPN-14E	750 32	1100 0.7,0.15	15	34 05 45N 117 14 12W	1156 14
M	Los Alamitos	2800	AM/CPN-4B	600 31	1200 0.5, 0.15	20	33 47 24N 118 03 04W	35 14
K	San Clemente	2800	AN/CPN-4	600 31	1100 0.5, 0.15	20	33 01 22N 118 35 03W	180 14
O,P	Ontario	2810 or 2820	ASR-5	400 34	900 0.833,.08	12.5	34 03 09N 117 35 36W	995 53

TABLE F-1(CONT)

ID	Site	Assigned Frequency(MHz)	Equipment Nomenclat	[c]P_T (kw)/ [d]G (dbl)	[e]PRF (Hz)/ [b]t, t_r Usec	[f]RPM	Latitude/ Longitude	Site El./ Ant. Ht.(ft)
R	Pt. Mugu	2862	ASR-7	400	710-1200	12.5	34 07 06N	13
				34	.833,.08		119 07 25W	26
S	Mt.	2840	AN/FPS-90	3700	330	NOD	32 52 33N	6200
	Laguna			39	2.0,0.9		116 24 51W	40
V,W	San	2866	AN/APS-20	400	359	10	33 14 57N	500
	Nicholas			30	2.0,0.15		119 31 26W	35
X,Y	Santa	2871	AN/APS-20	1000	309	10	33 59 40N	50
	Cruz			30	2.0,0.15		119 37 55W	35
Z	Laguna	2880	AN/APS-20	1000	309	10	34 06 27N	1532
	Peak			30	2.0,0.15		119 03 51W	30
D	San Pedro	2895	AN/FPS-90	5000	370	NOD	33 44 50N	1480
				39	2.0,0.9		118 20 10W	50
J	Imperial	2780	AN/CPN-4	250	1500	20	32 33 57N	20
	Beach			31	0.5,0.15		117 07 11W	15
G	San	2940	AN/FPS-114	1000	1056-1092	15	33 14 57N	500
	Nicholas Island			41	0.13,0.05		119 31 16W	35
	Santa	3010	AN/FPS-114	1000	1056-1092	15	33 59 40N	50
	Cruz Island			41	0.13,0.05		119 37 56W	35
	Laguna	3080	AN/FPS-114	1000	1056-1092	15	34 06 28N	1532
	Peak			41	0.13,0.05		119 03 51W	30
	Camp	2905-3080	AN/TPS-32	2200	265-900	6	33 17 00N	200
	Pendleton			41	30.0*,0.1		117 23 00W	25
	Navy Ships	2920-3080	AN/SPS-48		(Confidential)			
	Maritime	3020-3100	RCA,RAY,KEL	30	2000	20		50
	Ships			30	0.1,0.05			25

* Includes 9 frequency steps

[a]Site-Coordinates 34 00 03N 118 00 43W

[b]t, t_r - Pulse Width and rise time, respectively

[c]P_t - Peak Radiated Power

[d]G - Antenna Mainbeam Gain

[e]PRF-Pulse Repetition Frequency

[f]RPM - Antenna Scan Rate in Revolutions/minute

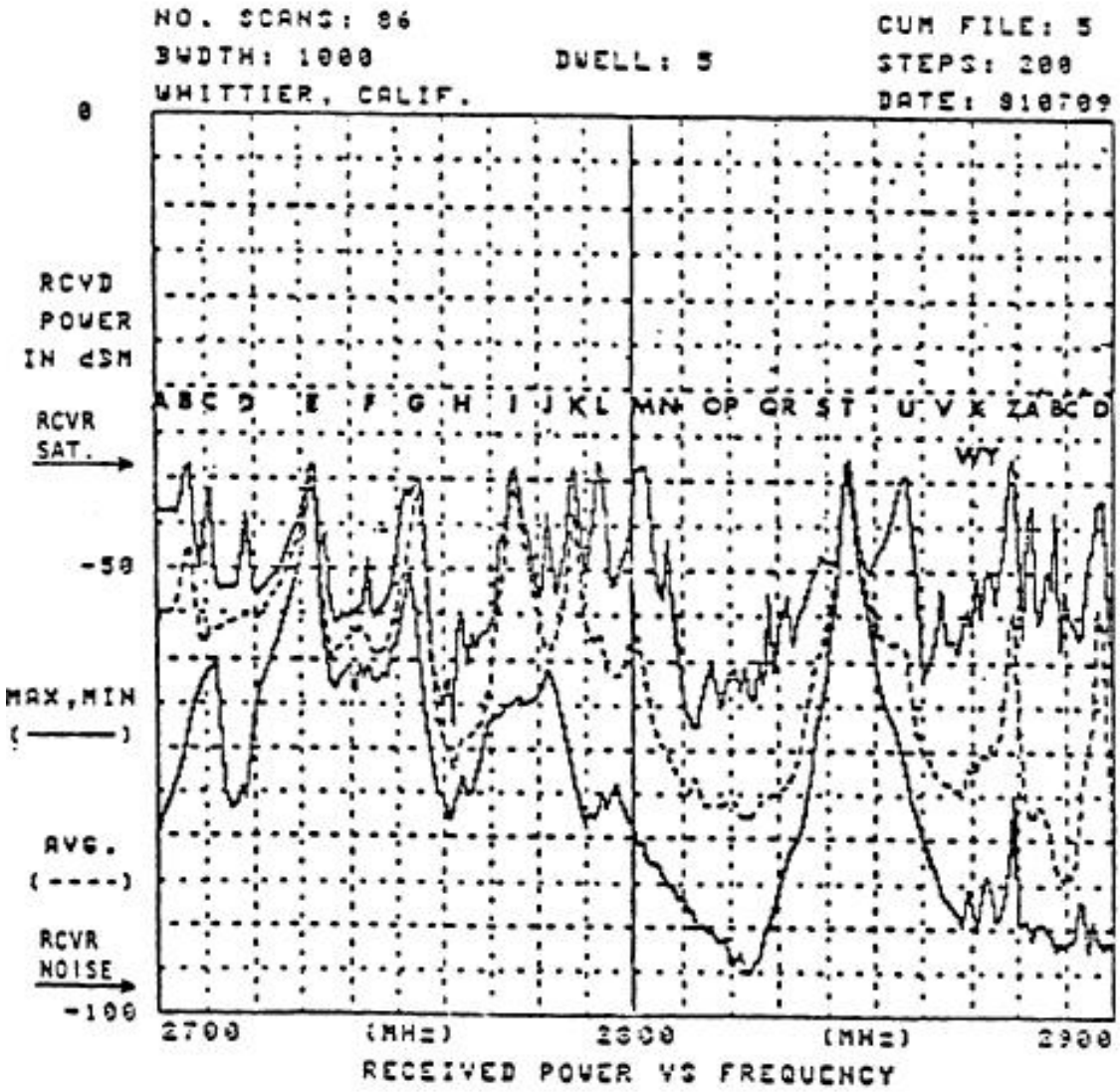

FIGURE F-1. 2700-2900 MHz ACCUMULATED OMNIDIRECTIONAL AMPLITUDE SCAN.

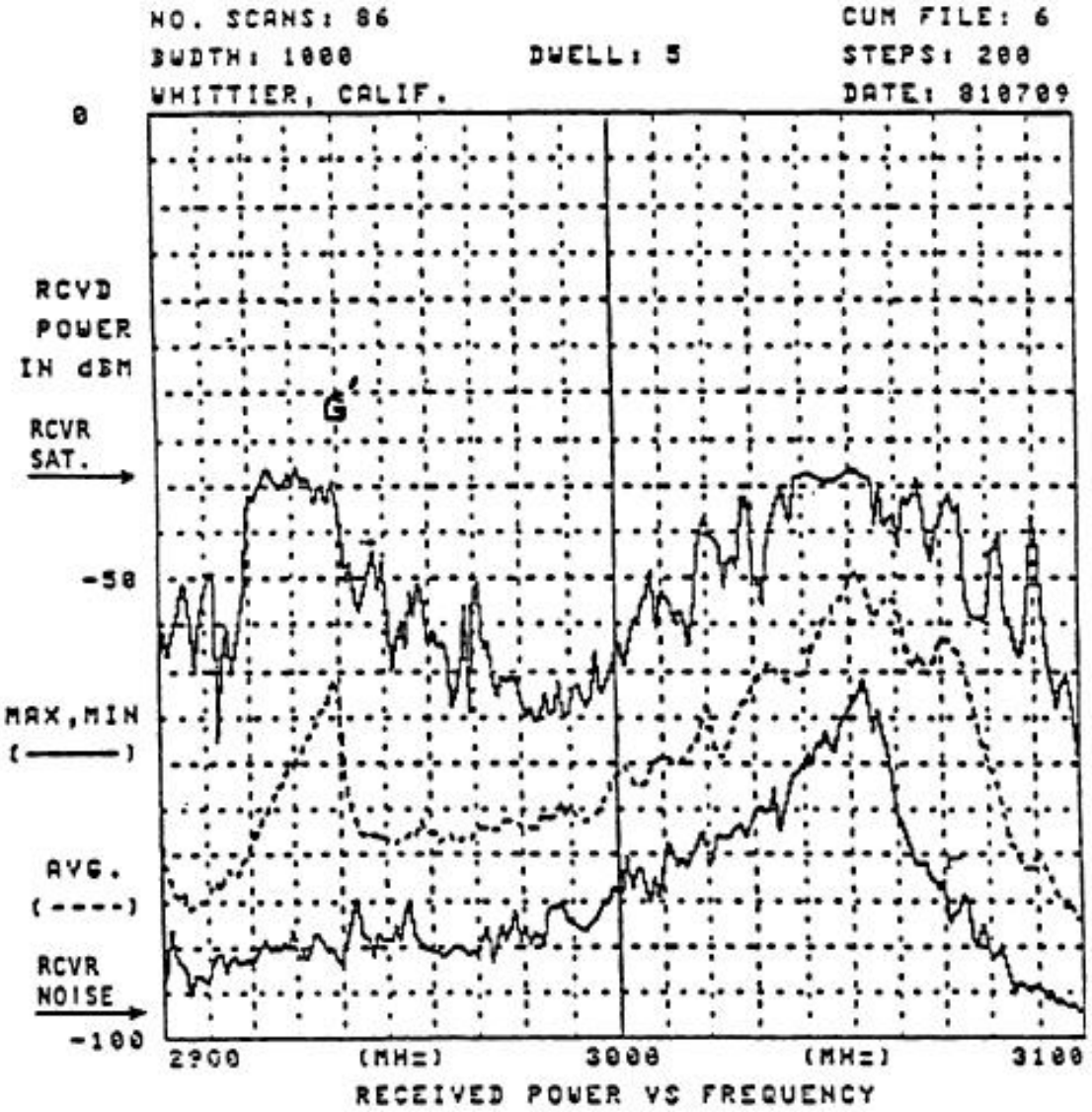

FIGURE F-2. 2900-3100 MHz ACCUMULATED OMNIDIRECTIONAL AMPLITUDE SCAN.

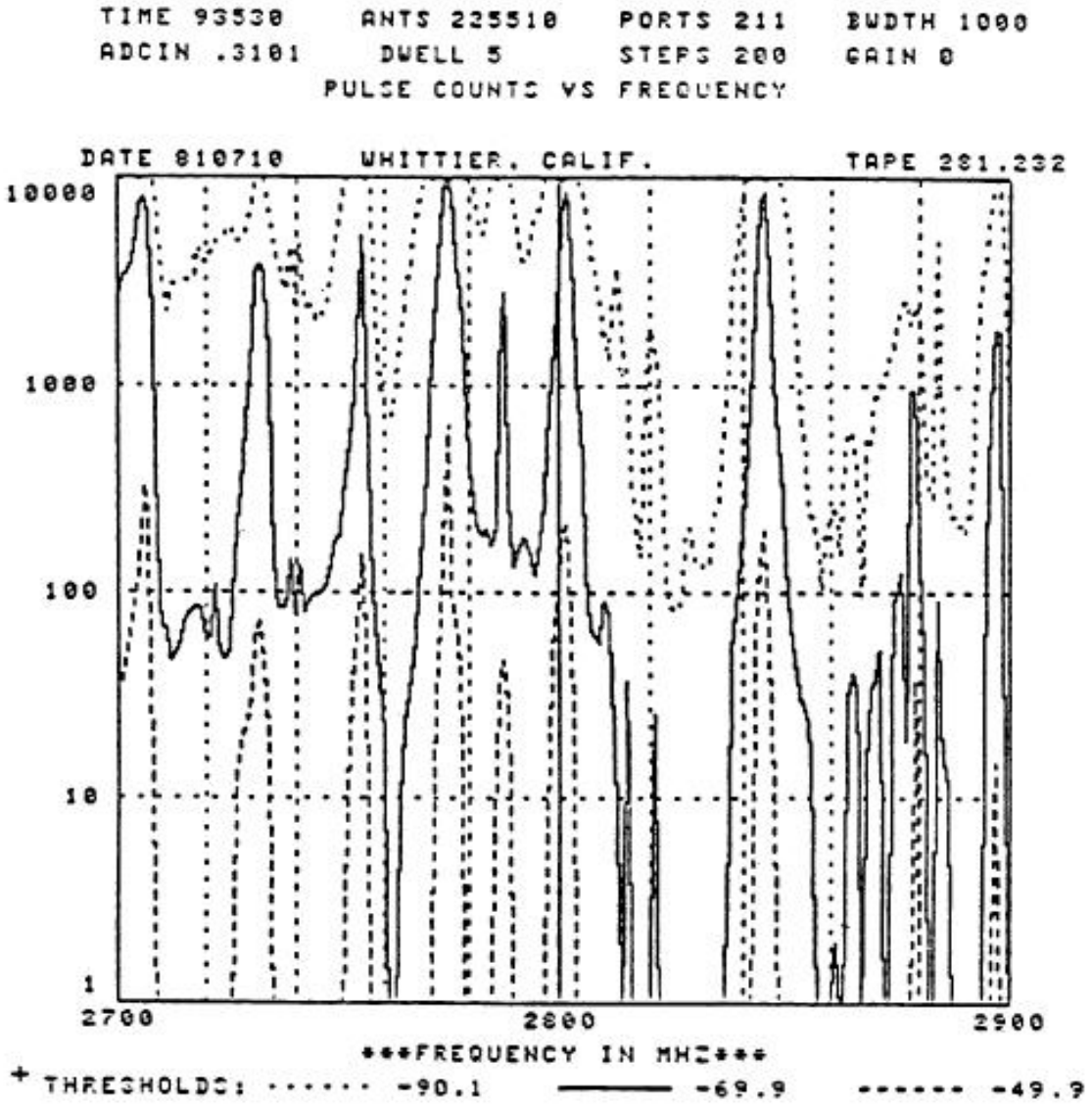

FIGURE F-3. PULSE COUNTS VS FREQUENCY FOR 2700-2900 MHz BAND.

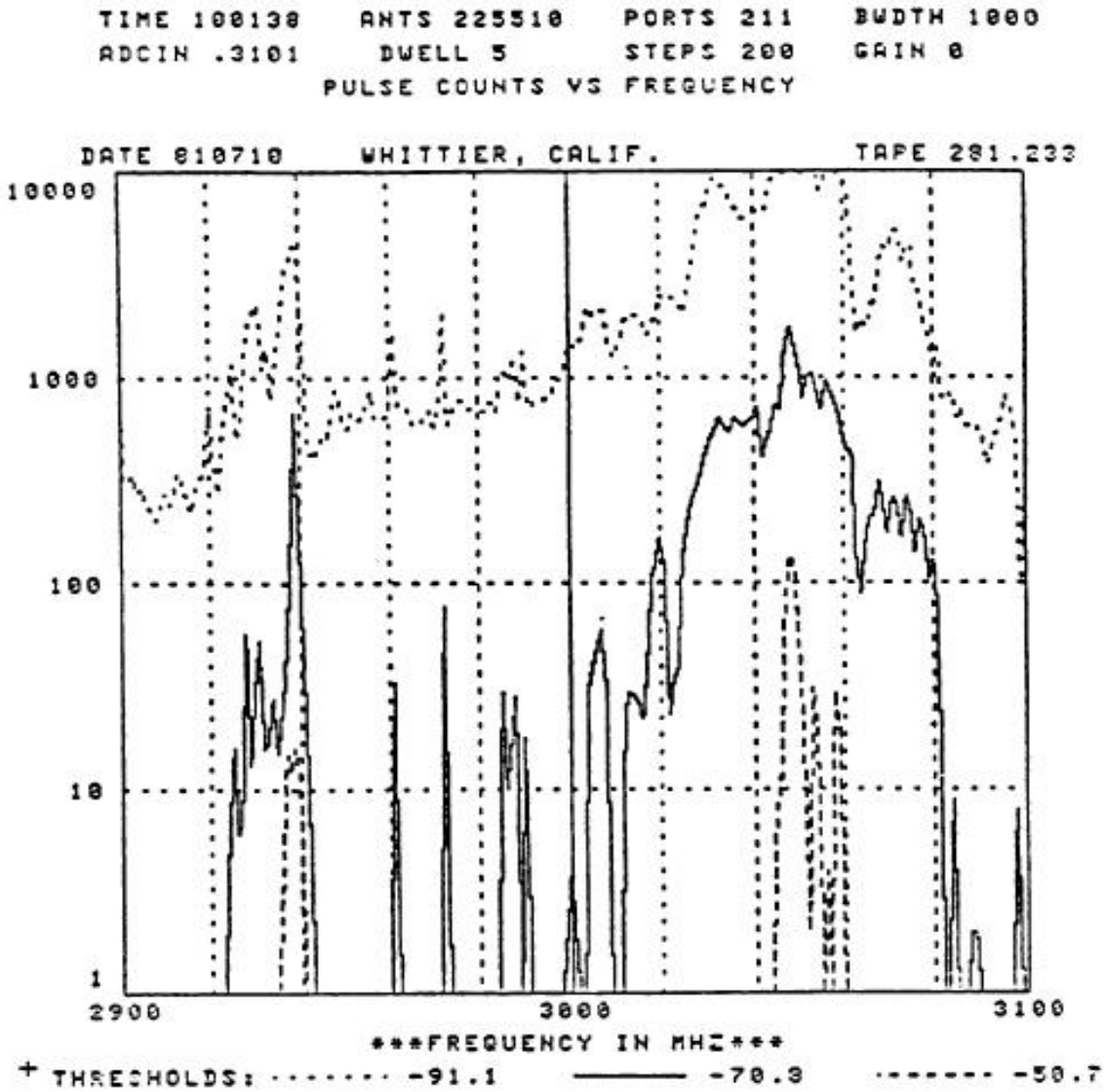

FIGURE F-4. Pulse counts vs frequency for 2900-3100 MHz band.

Notes for Figures F-1 through F-4

Figures F-3 and F-4 show the pulse counts recorded in the 2700 to 2900 and 2900 to 3100 MHz bands, respectively, for a 5-second dwell at each 1 MHz frequency increment covering approximately a 35-minute period of measurements in Figures F-1 and F-2. Pulses exceeding three threshold levels of approximately -50, -70, and -90 dBm were counted. Note that the counters saturated at a 10,000 count level. The 5 second dwell includes an observation of the mainbeam in all cases where the observed radar's antenna scan rate is above 12 RPM. Pulse counts at the more sensitive threshold levels that exceed the pulse rate of the contributing radars are probably due to terrain reflections received from the surrounding mountain ranges by the omni-directional receiving antenna used during these measurements.

APPENDIX G

ACRONYMS/ABBREVIATIONS

AF/ATC	Air Force Air Training Command
AFB	Air Force Base
AFR	Air Force Regulation
A/D	Analog/Digital
AFGL	Air Force Geophysics Laboratory
AFGWC	Air Force Global Weather Central
AFOS	Automation of Field Operations and Services
ANSI	American National Standards Institute
ARTCC	Air Route Traffic Control Center
ASTM	American Standard Testing Methods
ATC	Air Traffic Control
ATE	Automatic Test Equipment
AWDS	Automated Weather Distribution System
AWS	Air Weather Service
BITE	Built In Test Equipment
BWS	Base Weather Station
CCB	Configuration Control Board
CDP	Common Data Processor
CDR	Critical Design Review
CDRL	Contract Data Requirements List
CI	Configuration Item
CMS	Configuration Management System
CONUS	Continental United States
CPCI	Computer Program Configuration Item
CWP	Central Weather Processor
CWSU	Center Weather Service Unit
D/A	Digital/Analog

APPENDIX G

ACRONYMS/ABBREVIATIONS
(Continued)

DOC	Department of Commerce
DOD	Department of Defense
DOT	Department of Transportation
D/RADEX	Digital Radar Experiment
EDIS	Environmental Data Information Service
EFAS	Enroute Flight Advisory Service
EIA	Electronic Institute of America
EMC	Electromagnetic Compatibility
EMI	Electromagnetic Interference
ERL	Environmental Research Laboratories
FAA	Federal Aviation Administration
FAS	Fault Alarm System
FCM	Federal Coordinator for Meteorological Services and Supporting Research
FCMSSR	Federal Committee for Meteorological Services and Supporting Research
FQT	Formal Qualification Test
FSD	Full Scale Development
FSDPS	Flight Service Data Processing System
FSS	Flight Service Station
GFE	Government Furnished Equipment
GFP	Government Furnished Property
GMT	Greenwich Mean Time
HC	Hurricane Center
ICD	Interface Control Document
I&C	Installation and Checkout
IFR	Instrument Flight Rules
IOC	Initial Operating Capability
IOTF	Interim Operational Test Facility

APPENDIX G

ACRONYMS/ABBREVIATIONS
(Continued)

JDOP	Joint Doppler Operational Project
JOR	Joint Operational Requirements
JPDP	Joint Program Development Plan
JSPO	Joint System Program Office
LCC	Life Cycle Cost
LLI	Long Lead Item
LP	Limited Production
LRU	Line (Lowest) Replaceable Unit
MAX	Maximum
MDT	Maximum Downtime
MIE	Minimum Interpretive Effort
MIN	Minimum
MLOS	Microwave Line of Sight
MTBF	Mean Time Between Failures
MTBV	Mean Time Between Visits
MTTR	Mean Time to Repair
NADIN	National Airspace Data Interchange Network
NAS	National Airspace System
NEDS	Naval Environmental Display Station
NEXRAD	Next Generation Weather Radar
NHC	National Hurricane Center
NMC	National Meteorological Center
NOAA	National Oceanic and Atmospheric Administration
NOC	Naval Oceanography Command
NOCD	Naval Oceanography Command Detachment
NPC	NEXRAD Program Council
NSSFC	National Severe Storms Forecast Center

APPENDIX G

ACRONYMS/ABBREVIATIONS
(Continued)

NSSL	National Severe Storms Laboratory
NTR	NEXRAD Technical Requirements
NWS	National Weather Service
O&M	Operations and Maintenance
OJT	On Job Training
OMB	Office of Management and Budget
OSF	Operational Support Facility
PDL	Program Design Language
PDR	Preliminary Design Review
PRF	Pulse Repetition Frequency
PRT	Pulse Repetition Time
PUES	Principal User External System
PUP	Principal User Processing
RAWARC	Radar Report and Warning Coordination Circuit
R&D	Research and Development
RDA	Radar Data Acquisition
RF	Radio Frequency
RFC	River Forecast Center
RFI	Radio Frequency Interference
RFP	Request for Proposal
RGDAC	Rain Gage Data Acquisition Computer
RMA	Reliability, Maintainability, Availability
RPGOP	RPG Operational Position
RPG	Radar Product Generation
RPGOP	Radar Product Generation Operational Position
RPIE	Real Property Installed Equipment
SCC	System Command Center
SEB	Source Evaluation Board

APPENDIX G

ACRONYMS/ABBREVIATIONS
(Continued)

SIGMET	Significant Meteorological Information
SOW	Statement of Work
SPO	System Program Office
SPO1	NEXRAD System Program Office
SSA	Source Selection Authority
SSEB	Source Selection Evaluation Board
STC	Sensitivity Time Control
SWAP	Severe Weather Avoidance Program
TDP	Technical Development Plan
T&E	Test and Evaluation
TEMP	Test and Evaluation Master Plan
TO	Technical Order
TRACON	Terminal Radar Control Facility
UCP	Unit Control Position
VFR	Visual Flight Rules
WG/NGWR	Working Group for Next Generation Weather Radar
WCS	Writable Control Store
WSFO	Weather Service Forecast Office
WSO	Weather Service Office

This Page Intentionally Left Blank

APPENDIX H

ADAPTATION PARAMETERS

The NEXRAD adaptation parameters that have been identified are listed in Table H-1. The list identifies which parameters are applicable to the RDA, RPG, and PUP functional areas. Following Table H-1, the meaning and use of each adaptation parameter are discussed. The list is intended to be illustrative. The contractor shall supply a similar list detailing all parameters appropriate to the detailed system design chosen. Nominal values and acceptable ranges for each parameter shall be defined by the contractor subject to Government review and approval.

TABLE H-1 NEXRAD ADAPTATION PARAMETERS

ADAPTATION PARAMETER	APPLICABLE FOR RDA	RPG	PUP
1. Radar Site Lat./Long. Coordinate Position	x	x	x
2. Product Distribution: Product vs. PUP Functional Area		x	
Product Distribution: Product vs. Principal User's External Systems		x	x
Product Distribution: Product vs. Other User Interface		x	x
3. Product Selection to Map Background Pairing		x	x
4. Product to User Display Pairing		x	x
5. Product to Color Mix Pairing		x	x
6. Function Key Definition		x	x
7. Function Key Turn-on Setting (per Display)		x	x
8. Cursor Home Location (per Display)		x	x
9. Preview Area Location (per Display)		x	x
10. Cursor Coordinate Output Location (per Display)		x	x
11. Data Array(s) Output Location (per Array; per Display)		x	x
12. Symbol Size; Character Size; Line Width		x	x
13. Blink Rate		x	x
14. Inter-character and Inter-line Spacing of Alphanumeric Array Data		x	x
15. Leader Line to Character of Array Spacing		x	x
16. Data Type to Line Format Pairing		x	x
17. Task Overload Shedding Priority (per Functional Area)	x	x	x
18. Product Overload Shedding Priority (per Functional Area; Interface)	x	x	x
19. Display Preset Center Location (per-Display)		x	x
20. Overload Warning Threshold (per Overload Type)	x	x	x
21. Overload Warning Display (Minimum Time; Maximum Time Following		x	x
Overload Recovery)	x	x	x
22. Processor Storage Capacity (On-line)	x	x	x
23. Operational Mode (Initial Setting)	x		
24. Rain Gage Data Acquisition Computer Access Numbers		x	
25. RPG Access Numbers			x
26. Meteorological Phenomena for Alerts		x	x
27. Communication Timeout Periods		x	x
28. Alert Areas		x	x

1. Radar Site Latitude/Longitude Coordinate Position:

   A geographic position on the NEXRAD System geographic grid defining the radar site location to within a 1/4 km resolution.

2. Product Distribution: Product vs. PUP Functional Area (per RPG interface)

   Product Distribution: Product vs. Principal User External Systems (per RPG interface)

   Product Distribution: Product vs. Other User Interface (per RPG interface)

   Tables defining the distribution of NEXRAD products. The Product vs. PUP Functional Area tables will be used by the RPG to control the distribution of products to associated and non-associated PUP functional areas. The Product vs. Principal User External Systems tables will be used by a NEXRAD Unit to control the distribution of NEXRAD products from the NEXRAD Unit to a Principal User External System. The Product vs. Other User Interface tables will be used by the NEXRAD Unit to control product distribution to Other Users.

3. Product Selection to Map Background Pairing

   The Product Selection to Map Background Pairing adaptation parameter defines the background map(s) which are to be linked to a product selected for display. The actual display of the map data will be dependent upon the operator selection(s) of map types and the operator selection(s) of map content turn on/turn off.

4. Product to User Display Pairing

   The Product to Principal User Display Pairing (per interface) adaptation parameter defines a default turn-on condition for each user display.

5. Product to Color Mix Pairing (per PUP)

   The Product to Color Mix Pairing adaptation parameter defines a turn-on color selection for the presentation of each data item of each product.

6. Function Key Definition

   The Function Key Definition adaptation parameter defines that set of functions performed automatically when a specific function key is selected (activated). Function key examples are product selection, product content turn on/turn off, map selections, map content turn on/turn off, cursor home, magnification selection, test pattern selection/deselection, off-center, preset center, resolution selection, accept queued output message, alarm acknowledge, and enter.

7. Function Key Turn on Setting (per Display)

   The Function Key Turn on setting adaptation parameter defines the initial setting for each Function Key for use during system initialization.

8. Cursor Home Location (per Display)

   The Cursor Home Location adaptation parameter defines the display location at which the cursor symbol shall be displayed.

9. Preview Area Location (per Display)

   The Preview Area Location adaptation parameter defines the display location at which the first alphanumeric character will appear on the display when an input message is entered.

10. Cursor Coordinate Output Location (per Display)

    The Cursor Coordinate Output Location adaptation parameter defines the display location at which the first character of the cursor coordinate output message will appear on the display when a cursor position control function selection key is activated.

11. Data Array(s) Output Location (per Array; per Display)

    The Data Array Output Location adaptation parameters define the size of each alphanumeric data array (number of characters per line, and number of lines) and the display location of the top left character position of each data array.

12. Symbol Size; Character Size; Line Width

    The Symbol Size, Character Size, and Line Width adaptation parameters define the alphanumeric and special symbol character font and size in pixels for each character, and the pixels per line for line width.

13. Blink Rate

    The Blink Rate adaptation parameter defines the number of times a data item is to be turned on/off in a time period, and the number of display refresh cycles to be used for both the on and the off condition.

14. Inter-character and inter-line spacing of alphanumeric array data

    The Inter-character and inter-line spacing of array data adaptation parameter shall define the number of pixels to be used as spacing between adjacent characters on a line, and the number of pixels to be used as spacing between adjacent lines of characters.

15. Leader Line to Character or Array Spacing

    The Leader Line to Character or Array Spacing adaptation parameter defines the number of pixels between the end of a line and the center of a character or the center of a character in one of the four corners of a character array.

16. Data Type to Line Format Pairing

    The Data Type to Line Format Pairing adaptation parameter defines the line format (solid, dotted, dashed) to be used for display of each type of line data.

17. Task Overload Shedding Priority (per Functional Area)

    The Task Priority for Overload Shedding adaptation parameter defines the order for deleting (not performing) processing tasks when an overload situation occurs. Processing tasks are to be reactivated following elimination of the overload condition. Task reactivation shall be performed in a manner so as not to cause a cyclic condition between an overload and non-overload condition to occur.

18. Product Overload Shedding Priority (per Functional Area; Interface)

    The Data Priority for Overload Shedding/Recovery adaptation parameter defines the order for deleting data when an overload situation occurs on an interface between functional areas, or an interface from a functional area to an external user's system interface or to an other user interface. The recovery from an overload condition shall be performed automatically. Data types shall be recovered in the reverse of the shedding order. Data types shall be recovered one data type at a time with the time delay between the recovery of each data type a part of the adaptation parameter.

19. Display Preset Center Location (per Display)

    The Display Preset Center Location adaptation parameter defines the geographic coordinate position of the center of the display.

20. Overload Warning Threshold (per Overload Type)

    The Overload Warning Threshold adaptation parameter defines the utilization level that, when reached or exceeded, will result in an overload warning being issued. Overload types shall include processor, memory, communication interfaces, input data buffers, mass storage, and archival storage utilizations.

21. Overload Warning Display (Minimum Time; Maximum Time Following Overload Recovery)

    The Overload Warning Display adaptation parameters define the minimum time an overload message shall be presented on the display and the maximum time following recovery from an overload condition that an overload message shall be presented. The minimum time requirement for presentation of an overload message shall take precedence over the maximum time following recovery from overload requirement.

22. Processor Storage Capacity (On-line)

    The Processor Storage Capacity adaptation parameter defines the amount of on-line memory available for the operational system.

23. Operational Mode (Initial Setting)

    The Operational Mode adaptation parameter defines the radar operational mode to be used following system initialization.

24. Rain Gage Data Acquisition Computer Access Numbers

The Rain Gage Data Acquisition Computer Access Numbers adaptation parameters define the telephone numbers for each rain gage computer.

25. RPG Access Numbers

The RPG Access Numbers adaptation parameters define the telephone numbers of each RPG for the automatic dial-in for NEXRAD products.

26. Meteorological Phenomena for Alerts

The Meteorological Phenomena for Alerts will specify thresholds for all alert categories. Each threshold criterion will contain a set of specific parameter values or phenomenon conditions. This set of adaptable thresholds will be maintained at each RPG.

27. Communication Timeout Periods

The Communication Timeout Periods adaptation parameters define the timeout periods for the five "timers" identified in the ICD. Specifically, these are Status, Acknowledgement, Busy, Idle, and Interframe.

28. Alert Areas

The Alert Area adaptation parameter allows the PUP or RPGOP operator to define up to two Alert Areas. There is one set of Alert Areas per PUP or RPG Operational Position. Within the defined Alert Area(s) the PUP or RPGOP will be capable of specifying conditions which will cause an alert.

APPENDIX I

OPERATIONAL MODES AND SCANNING STRATEGIES

This Appendix describes NEXRAD Operational Modes and Scanning Strategies and provides a set of criteria for automatic selection/deselection of modes. Additional modes, strategies, and selection/deselection criteria will be defined and supplied by the Government as updates to this Appendix.

1. OPERATIONAL MODES

NEXRAD Operational Modes are designated by capital letters, A, B, C, etc. The following modes are currently defined:

- Mode A - Precipitation/Severe weather
- Mode B - Clear air observation

2. SCANNING STRATEGIES

NEXRAD Scanning Strategies are designated by Arabic numerals 1, 2, 3, etc. The following strategies are currently defined:

1. Fourteen unique elevation angles from the base elevation angle to +20 degrees in elevation for a volume scan time of 5 minutes. The lowest 6 degrees of elevation shall have no gaps between the one-way pattern 3 dB points of adjacent elevation scans.

2. Nine unique elevation angles from the base elevation angle to +20 degrees in elevation for a volume scan time of 6 minutes. The lowest 4 degrees of elevation shall have no gaps between the one-way pattern 3 dB points of adjacent elevation scans.

3. Five unique elevation angles from the base elevation angle to +5 degrees in elevation for a volume scan time of 10 minutes. There shall be no gaps between the one-way pattern 3 dB points of adjacent elevation scans.

3. SELECTION/DESELECTION CRITERIA

The contractor shall develop an automatic method for deselection of Mode B, clear air observation. The criterion used for this shall be the Precipitation Category (defined in the Precipitation Detection Function described in Appendix D). If the Precipitation Category is 1, a Precipitation/Severe Weather operational mode with a scanning strategy determined by adaptation data shall be automatically selected. Automatic deselection of Mode B shall not occur when the precipitation category is two (2).

This Page Intentionally Left Blank

APPENDIX J METEOROLOGICAL PHENOMENA FOR ALERTS

	ALERT CATEGORIES	RANGE OF COVERAGE(km)	THRESHOLD CRITERIA
a.	Grid Group		
	Velocity (lowest elev.)	0-115	Knots: 6 values
	Composite Reflectivity	0-345	dBZ_e: 6 values
	Echo Tops	0-230	K-feet: 4 values
	SWP	0-230	Probability (%): 4 values
	VlL	0-230	Kg/m^2: 4 values
b.	Volume Group* (non-grid, algorithm outputs)		
	VAD (lowest elev.)	NA	Knots: 6 values
	Hail	0-230	Probable, Positive
	MESO	0-230	Uncorrelated Shear, 3-D Correlated Shear, Mesocyclone
	TVS	0-115	Detected
	Max Storm Refl.	0-230	dBZ_e: 6 values
	Max Storm Vel (lowest elev.)	0-230	Knots: 6 values
	Storm Volume (mass-weighted)	0-230	kg 10^6: 4 values
	Storm Top	0-230	K-feet: 4 values
	Max 1-hr rainfall accumulation	0-230**	inches: 4 values
c.	Forecast Group* (Storm oriented)		
	Hail	0-230	Probable, Positive
	MESO	0-230	3-D Correlated Shear, Mesocyclone
	TVS	0-115	Detected
	Max Storm Refl	0-230	dBZ_e: 6 values
	Max Storm Vel (lowest elev)	0-230	knots: 6 values
	Storm Volume (mass-weighted)	0-230	kg 10^6: 4 values
	Storm Top	0-230	K-feet: 4 values

Expansion provisions shall be made to accommodate additional alert categories as follows:

Group a	1 additional
Group b	9 additional
Group c	10 additional

---

* See the NEXRAD Algorithm Report (December 1985) for definitions of outputs listed under Volume and Forecast Groups.

** Location of value not required.

This Page Intentionally Left Blank

APPENDIX K
RADAR CODED MESSAGE CODE

The Radar Coded Message, as described in Item 26, Appendix E, NEXRAD Products, shall be composed of three parts, preceded by a communications header. Part A, Reflectivity, and Part B, VAD Winds, shall be encoded automatically. Part C, Remarks, shall be encoded automatically or at the PUP as specified in that part. In the groups below, capital letters represent the fixed part of the group, and small letters represent variables. The message shall be encoded as follows:

Header. The header is encoded as follows:

ccc	The communications node (PUP site identifier).
ROBEE or ROBUU	The product category for edited radar coded message. The product category for unedited radar coded message.
sidd(C/R)	Four letter RDA site identifier.

(Example: cccROBEE sidd (C/R))

Part A: Reflectivity

Part A of the Radar Coded message (RCM) contains an intermediate graphic product and a tabular listing of alphanumerics. Data in the Radar Coded Message are located with respect to a polar stereographic grid. The local grid at each antenna site is designed to be a subject of the National Radar Grid so that data may be readily composited.

The National Radar Grid has a resolution of 1/4 LFM (Limited Fine Mesh Model) which is 47.625 km at 60 degrees north latitude. The vertical axis of the grid is parallel to the 105 degree west longitude meridian.

At each site, a local grid is chosen having 25 rows and 25 columns, with the antenna site located within the central box. The 25 rows and columns of the grid are assigned letters A through Y, so that the box containing the antenna site is always box MM. Box AA is at the upper left. As shown in Figure K-1, each box is further subdivided to form an overall 1/16 LFM grid.

The graphic product contains reflectivity data for the 1/16 LFM grid over the radar area of coverage out to 460 km. The reflectivity intensity value for each grid box is determined by assigning the maximum value of all Composite Reflectivity boxes whose centers are contained within the 1/16 LFM grid square.

The RCM is based on the 16 level, 4 km x 4 km Composite Reflectivity product but contains only 9 data level categories; 6 for data and 1 for missing or below threshold data within 230 km and 2 for data beyond 230 km. For data beyond 230 km, a separate threshold is provided for which: a) all data above that threshold are labeled as level 8, and b) all data below that threshold are labeled as level 9. The intermediate graphic product is displayed at the RPGOP or PUP for editing by changing or deleting data within outlined areas by using the cursor control device.

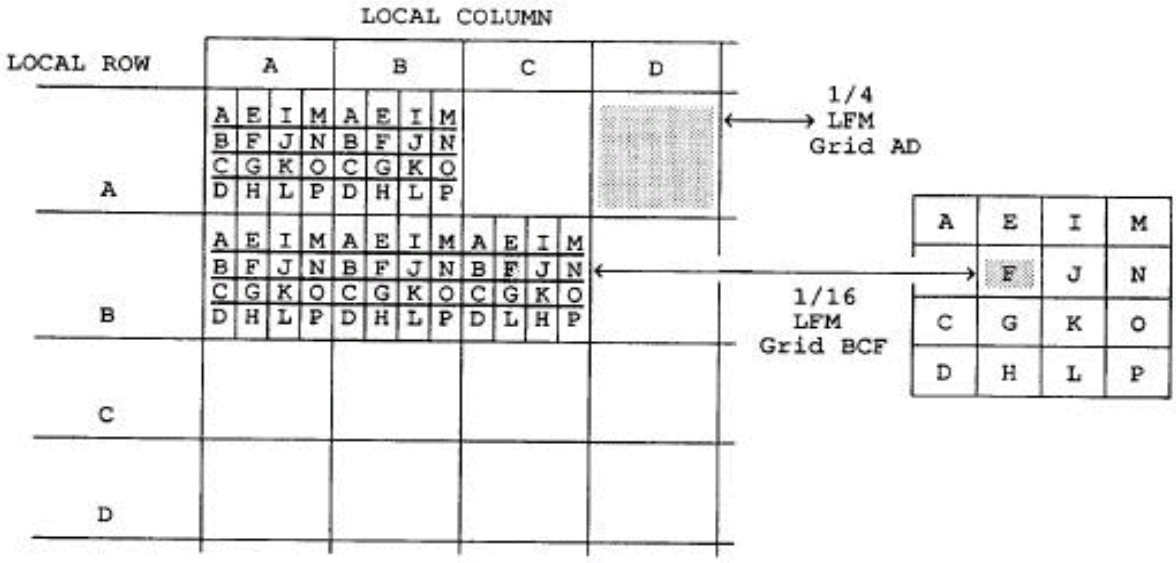

FIGURE K-1 1/16 LIMITED FINE MESH GRID

Within the tabular listing, data are provided for the maximum echo top. The height, and the position where provided, is derived from the Echo Tops product. The listing also shows the locations of the largest centroids within 230 km of the radar using the 1/16 LFM grid and provides the forecast centroid speed and direction, as available from the Storm Position Forecast algorithm.

Part A of the message is encoded as follows:

/NEXRAA	Part A indicator.
sidd	Four letter RDA site identifier
ddmmyytttt	The day (dd) of the month (mm), the year (yy), and the time (tttt), to the nearest minute, in Greenwich Mean Time (GMT).
edited or unedited	Status of message
RADNE	A group to encode no reportable reflectivity intensity values shall be provided, i.e., field NInnnn is zero. This shall be corrected after graphic editing.
RADOM	A group to encode radar down for maintenance shall be provided.
/MDnnnn	A group of six characters to encode operational mode shall be provided. See Appendix I. Choices are PCPN and CLAR. (Example: /MDPCPN)

/SCnnnn	A group of six characters to encode scan strategy shall be provided. See Appendix I. Choices are 1405 (14 scans in 5 minutes), 0906, 0510, etc. (Example: /SC1405)
/NInnnn:	The total number (nnnn) of intensities (NI) reported in the following field (gggi) shall be encoded. This group shall be corrected after editing, if editing is performed. (Example: /NIO144)
gggi	Reflectivity intensity shall be mapped onto the 1/16 LFM grid (ggg). Encode locations and intensities by a series of groups made up of three letters (1/16 LFM) followed by the maximum intensity of the designated grid box. The three letters (in order) shall be row, column, and sub-grid. The numbers following, represent intensities in succeeding sub-grid boxes in that row. That is, encode each 1/16 LFM grid box from west to east, starting with the northern-most row with data, followed by the next southern row, etc. In the interest of compacting the message, successive intensities of different or similar values may be listed after a single location as long as the intensities are continuous. When succeeding grid boxes contain the same intensity value, the number of succeeding boxes with the same value may be designated by a letter of the alphabet. That is, if 4 succeeding 1/16 LFM grid boxes (a total of five boxes) are at level 2, they could be coded as GGG2D. The "2D" may also be followed by different intensity values. Location/intensity groups shall be separated by a comma. (Example: ABF112D331,BCA1211)
/MThhh:ggg	The location and height (MSL) of the maximum echo top (MT) within 230km radius of the radar shall be encoded using the three letter grid designator (ggg) and assigning the height coinciding with echo top product in hundreds of feet (hhh). (Example: /MT320:NLB)
/NCENnn:	The total number (nn) of centroids (NCEN) reported in this portion of the message shall be encoded. This number shall correspond to the corrected centroids below. (Example: /NCEN04:)
Cnnggg dddfff	The centroid (C) number (nn), location (grid box) (ggg), direction from which it is moving (in one degree increments) (ddd), and its speed (fff) in knots, shall be encoded. Successive groups shall be separated by commas. If, during editing, data are deleted in a grid box that contains a centroid, this group shall be corrected by deleting this centroid. (Example: C03QMB240012)
/ENDAA(C/R)	A group to indicate the end of Part A.

The following is a summary example of the components of Part A.

/NEXRAA sidd 2812881330 Edited (C/R)

/MDnnnn /SCnnnn /NInnnn:

gggiii ... i,gggiii...i

/MThhh:ggg

/NCENnn: Cnnggg dddfff,Cnnggg dddfff

/ENDAA (C/R)

Part B: VAD Winds

Part B of the RCM contains a single profile of the horizontal wind information derived from the output of the VAD algorithm. Part B of the message is encoded as follows:

/NEXRBB Part B indicator.

sidd Four letter RDA site identifier.

ddmmyytttt The day (dd) of the month (mm), the year (yy), and the time (tttt), to the nearest minute, in GMT.

VADNA The optional entry VADNA shall be encoded for instances when no VAD wind data are available for the last 15 minutes, if appropriate.

hhhcdddfff Coded heights (hhh) in hundreds of feet MSL; confidence (c) level, using RMS for the coded height; wind direction (ddd) and wind speed (fff), in knots, shall coincide with those derived from the VAD Winds product. The confidence level shall be encoded as a single letter in accordance with the following:

A = RMS of 1 m s^{-1}; B = RMS of 2 m s^{-1};
C = RMS of 3 m s^{-1}; D = RMS of 4 m s^{-1};
E = RMS of 5 m s^{-1}; F = RMS of 6 m s^{-1};
G = RMS of greater than or equal to 7 m s^{-1}.

Wind direction and speed, as output from the VAD algorithm, shall be reported at up to 19 heights, in feet MSL. Default heights are:

1,000	6,000	12,000	25,000
2,000	7,000	14,000	30,000
3,000	8,000	16,000	35,000
4,000	9,000	18,000	50,000
5,000	10,000	20,000	

(Example: 080C240060)

/ENDBB (C/R) End of Part B indicator.

The following is a summary example of the components of Part B.

/NEXRBB sidd 2812881330 (C/R)

hhhcdddfff,hhhcdddfff,hhhcdddfff

/ENDBB (C/R)

Part C: Remarks

Part C of the Radar Coded Message contains remarks in an alphanumeric format. Automatically generated remarks provide information on the locations of tornadic vortex signatures, mesocyclones, centroids, storm tops, and hail indices. The automated portion of Part C is encoded as follows:

/NEXRCC Part C indicator.

sidd Four letter RDA site identifier.

ddmmyytttt The day (dd) of the month (mm), the year (yy), and the time (tttt), to the nearest minute, in GMT.

/NTVSnn: The total number (nn) of tornadic vortex signatures (NTVS) detected by the TVS algorithm and reported in Part C shall be encoded. (Example: /NTVS03:).

TVSnnggg The location (ggg) and number identifier (nn) of each tornadic vortex signature (TVS) shall be encoded using the three-letter grid box designator. (Example: TVS02NLB).

/NMESnn: The total number (nn) of mesocyclones and areas of couplet (NMES) detected by the Mesocyclone Detection algorithm and reported in Part C shall be encoded. (Example: /NMES05:).

Mnnggg The location (ggg) and number identifier (nn) of each mesocyclone or area of couplet (M) shall be encoded using the three-letter grid box designator. (Example: M03JLC).

/NCENnn: The total number (nn) of centroids (NCEN) reported in Part C shall be encoded. (Example: /NCEN08:)

Cnnggg ShhhHi The height (hhh) in hundreds of feet (MSL), of the storm top (S), as derived from the Storm Structure algorithm, for each centroid (C) identified in Part A to include location (ggg) shall be encoded. The centroid identifier number (nn) is the same as given in Part A. The hail (H) index (i), as provided by the Hail algorithm, is also given as one of the four following data levels:

N - no hail; P - possible or probable hail; H - hail; U - unknown.

(Example: C04QQD S440HP).

In addition to the automatically generated remarks, Part C provides for optional manual entries. A template is provided containing the fixed part of the groups listed below. The only groups to be sent are those to which data are added. It should be noted that the absence of a remark does not imply that the phenomenon does not exist.

/PCTRyyyy,aaa:gg Precipitation type and intensity trend. Precipitation type (yyyy) may be coded for a representative area of the display. The type is variable and up to five

characters in length. The intensity trend (aaa) is also variable in length and up to three characters in length. The location (gg) is reported using the two letter identifier for the 1/4 LFM grid.

For convective echo systems, the characteristic type of precipitation is defined as that type associated with the maximum observed intensity. For non-convective echo systems, the type of precipitation is defined as that type predominant in horizontal extent. If precipitation is reaching the surface, report that type.

Precipitation	Symbol
Rain	R
Rain Shower	RW
Freezing Rain	ZR
Freezing Rainshower	ZRW
Snow	S
Snow Shower	SW
Drizzle	L
Freezing Drizzle	ZL
Ice Pellet	IP
Ice Pellet Shower	IPW

Designated areas believed to be associated with thunderstorms may use the symbol T preceding the precipitation symbol.

Evaluate the intensity trend in terms of the net change in the characteristic intensity during a period of 1 hour for lines and areas and 15 minutes for cells.

Report the intensity trend as increasing (+) or decreasing (-), if, during the period, the net change in characteristic intensity (dBZe) changes from one intensity level to another.

If the net change in the characteristic intensity during the period does not change categories, report the intensity trend as NC (no change).

Report echo systems as NEW (new development) if they originated during the period specified above. Areas or lines that develop from a cell or cells during the hour preceding the report shall be reported as NEW.

For a mixed system, consisting of a liquid characteristic type of precipitation and a frozen secondary type, report the intensity trend of the liquid precipitation.

Intensity trend symbols are:

Symbol	Trend
+	Increasing
-	Decreasing
NC	No Change
NEW	New

(Example: PCTRRW,NEW:LO,LP)

/LEWP:gg A line echo wave pattern (LEWP) shall be encoded using the two letter 1/4 LFM grid box location (gg). Example: /LEWP:KJ,LK,MK,NK,OK,PL).

/BASEhhh:gg The base of an elevated layer (BASE) shall be encoded in hundreds of feet (hhh) (MSL) using the two letter identifier for the 1/4 LFM grid location (gg). (Example: /BASE090:LO,MO).

/MALFhhh:gg The occurrence of precipitation which is mostly aloft (MALF) shall be encoded. The height (hhh) is reported in hundreds of feet (MSL). The location (gg) shall be coded using the two letter identifier for the 1/4 LFM grid. (Example: MALF050:KP,KQ)

/PALFhhh:gg The occurrence of precipitation which is partially aloft (PALF) shall be encoded. The height (hhh) is reported in hundreds of feet (MSL) and the location (gg) is the 1/4 LFM grid identifier. (Example: /PALFO50:PM,PN).

/MLTLVLhhh The height (hhh) of the melting level (MLTLVL) in hundreds of feet (MSL) shall be encoded. (Example: /MLTLVL075).

/EYEdddfffcc:ggg; LATeee.ex LONeee.ey The location (ggg) of the eye of a hurricane or tropical storm (EYE), the direction (ddd) from which it is moving and the speed (fff), in knots, of movement shall be encoded. Confidence in the fix (cc) is reported as good (GF), fair (FF), or poor (PF). Further, the location of the eye shall also be encoded in latitude (LAT) and longitude (LON). The location shall be expressed in whole degrees and tenths (eee.e) with provision for specifying north (N), south (S), east (E), or west (W) as appropriate. (Example: \EYE160010GF:00A;LAT28.4N,LON178.5W).

/CNTRdddfff:ggg; LATeee.ex LONeee.ey The location (ggg) of the center of a hurricane or tropical storm (CNTR), the direction (ddd) from which it is moving and the speed (fff) of movement, in knots, shall be encoded. Further, the location of the center shall also be encoded in latitude (LAT) and longitude (LON). The location shall be expressed in whole degrees and tenths (eee.e) with provision for specifying north (N), south (S), east (E), or west (W) as appropriate. (Example: /CNTR160005:00A,LAT28.4N,LON178.5W).

/REM: This space is for any other remarks not covered in the above remarks.

/EDITED:int If the radar coded message has been edited (EDITED) the editor shall report such, adding his/her initials (int). (Example: /EDITED:DSS)

/ENDCC (C/R) End of Part C indicator.

The following is a summary example of the components of Part C:

/NEXRCC sidd 2812881330 (C/R)

/NTVSnn: TVSnnggg,TVSnnggg,TVSnnggg

/NMESnn: Mnnggg,Mnnggg,Mnnggg

/NCENnn: Cnnggg ShhhHi,Cnnggg ShhhHi,Cnnggg ShhhHi

/PCTRyyyy,aaa:gg

/LEWP:gg,gg,gg,gg

/BASEhhh:gg,gg,gg

/MALFhhh:gg,gg

/PALFhhh:gg,gg

/MLTLVLhhh

/EYEdddfffcc:ggg;LATeee.ex,LONeee.ey

/CNTRdddfff:ggg;LATeee.ex,LONeee.ey

/REM:

/EDITED:int

/ENDCC (C/R)

<u>End of Message</u>

At the end of the message, the following group shall be sent:

/ENDALL (C/R) A group to indicate end of message shall be provided.

Appendix L

This Appendix Intentionally Left Blank.

This Page Intentionally Left Blank

APPENDIX M

NEXRAD ACCESS ROADS

1. DESCRIPTION

This Appendix contains the performance specification for access roads. Access roads shall be provided by the contractor to each radar and microwave repeater site.

2. PERFORMANCE SPECIFICATION

The contractor shall provide an all-weather access road suitable for use by 2-wheel drive sedans. Minimum road width shall be 10 feet shoulder to shoulder, with the roadway to be crowned or cross-sloped to drain. Maximum grade shall be 12 percent, except that grade may be exceeded for short distances (up to 100 feet) at the Government's option. Passing turnouts shall be provided at a maximum spacing of 600 feet.

Adequate cross drainage culverts for a 10 year storm shall be provided in water courses and low spots to prevent ponding. The subgrade shall be adequately compacted, so that the combined subgrade and surface course will carry 2-wheel sedan traffic during wet weather without rutting or pumping. If the native material is a fat clay, peat, organic, or other unsuitable material, and is inadequate to satisfy the preceding requirement, the roadway area shall be excavated and backfilled with granular material, or overlain with granular material, to a depth sufficient to carry the 2-wheel sedan traffic during wet weather.

A 4-inch thick compacted crusher-run surface course shall be provided, except that this requirement may be altered or waived at the Government's option. Prior to site commissioning, the roadway surface shall be bladed and compacted to reestablish the crown or cross-slope, and to remove any potholes or wash-boarding.

If operational facilities at an airport, including apron, runway, and taxiways, are paved, any roadway within 300 feet shall also be surfaced with a double bituminous surface treatment on top of the surface course.

This Page Intentionally Left Blank